MINOS MASTER Module

VME Interface Firmware

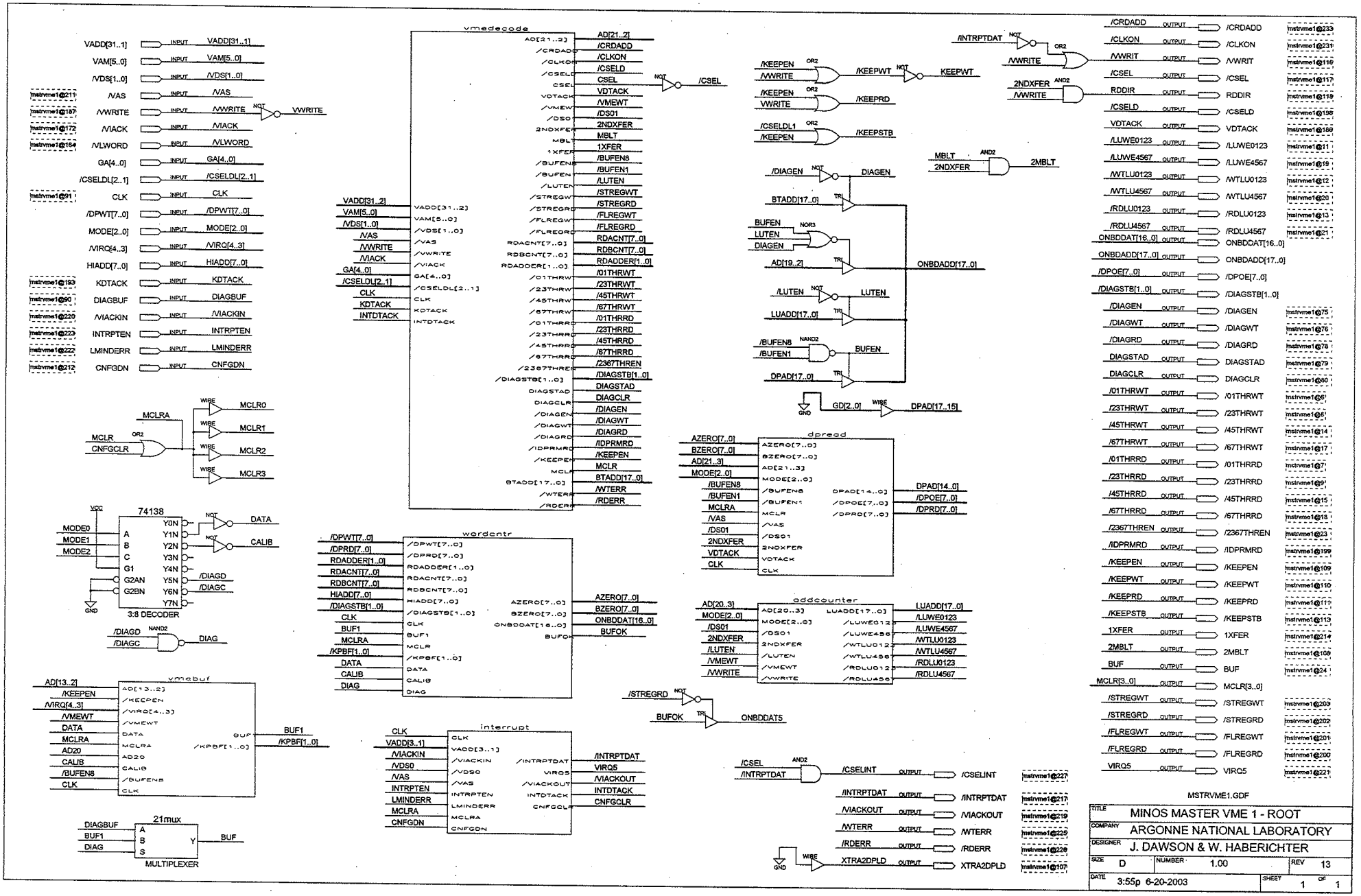

00E5B703

RED VA13

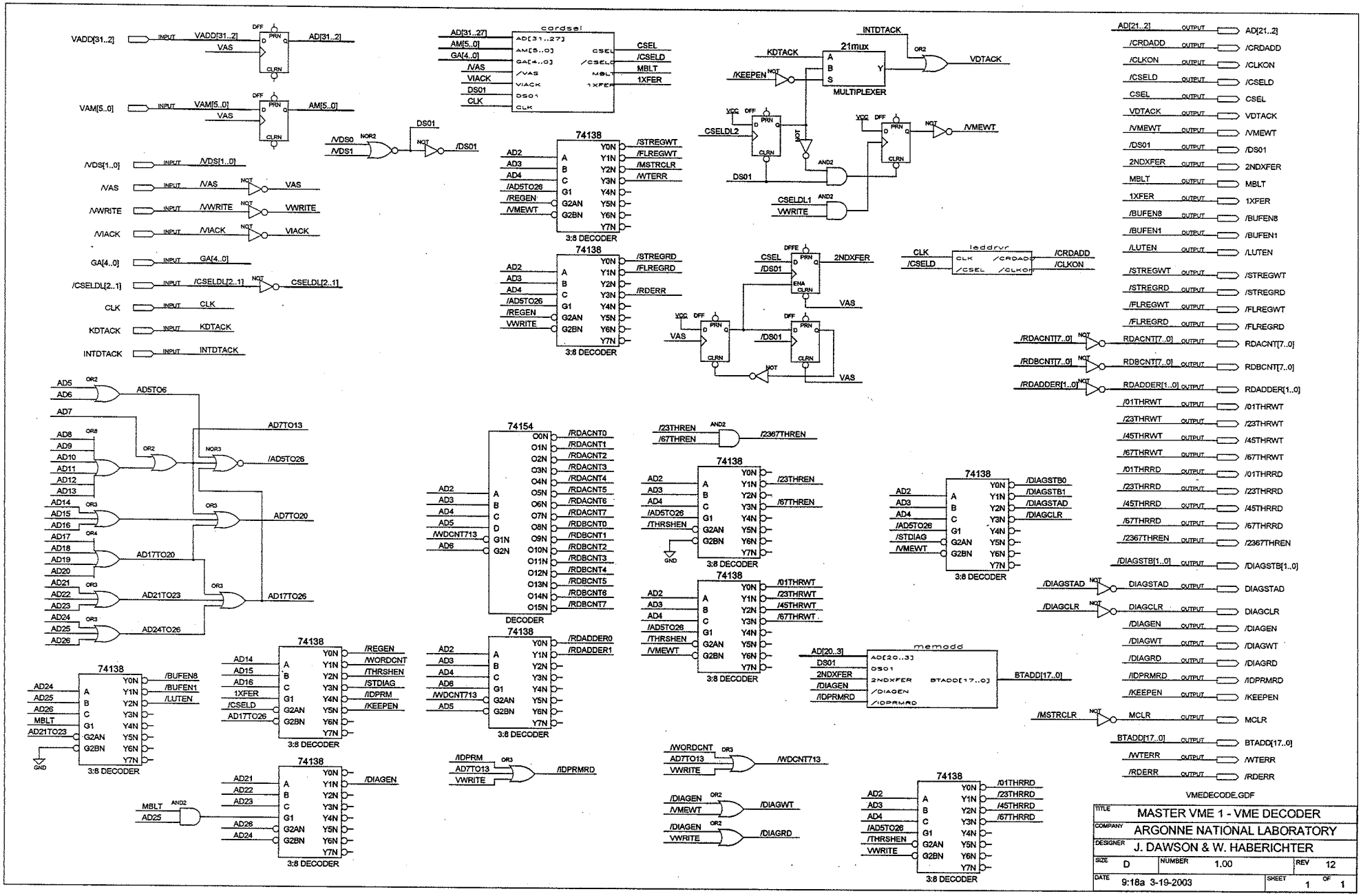

00E500DB

RED
VA12

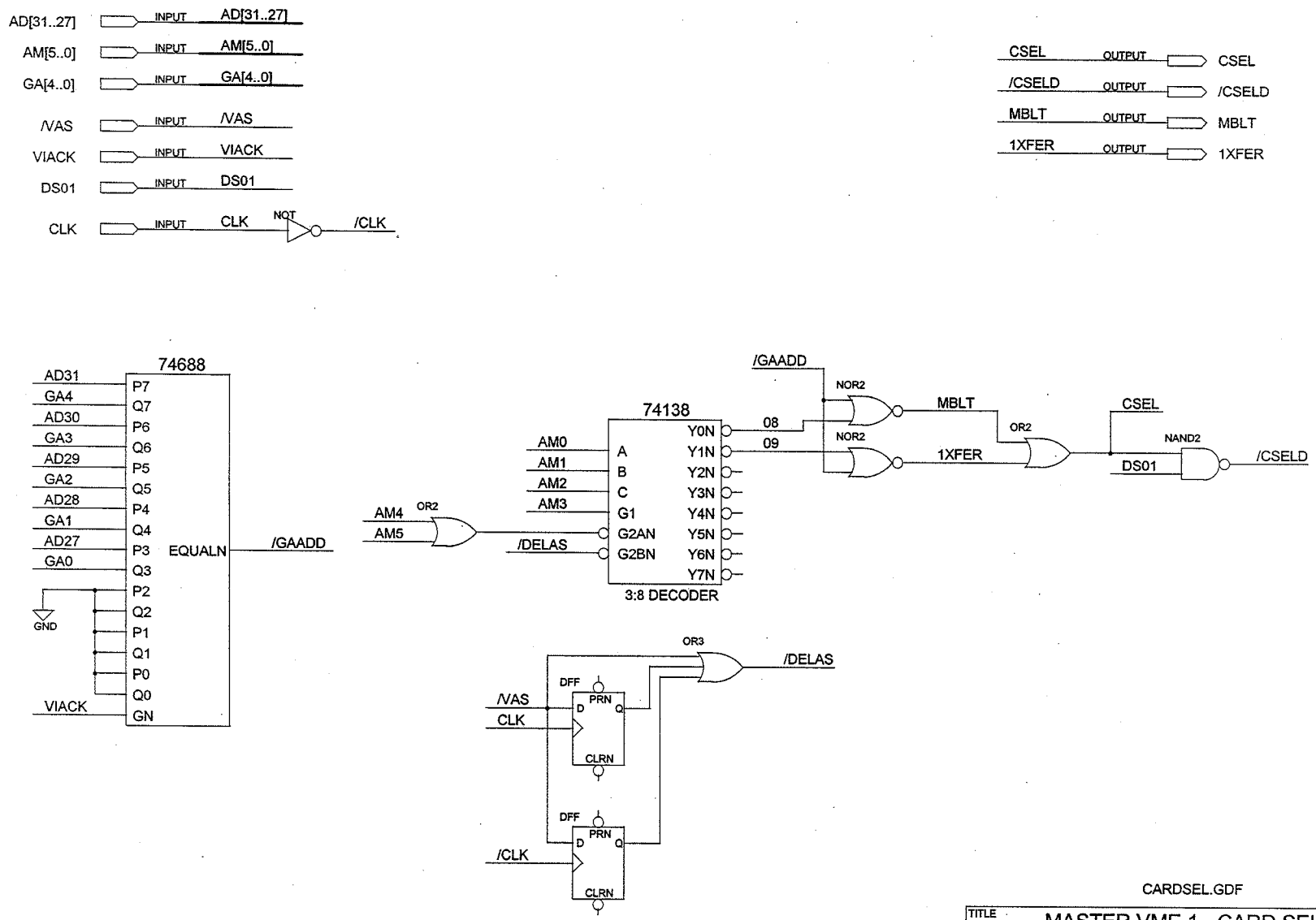

CARDSEL.GDF

TITLE	MASTER VME 1 - CARD SELECT
COMPANY	ARGONNE NATIONAL LABORATORY
DESIGNER	J. DAWSON & W. HABERICHTER
SIZE C	NUMBER 1.00 — REV 1
DATE 10:05a 9-17-2002	SHEET 1 OF 1

MDF56D92

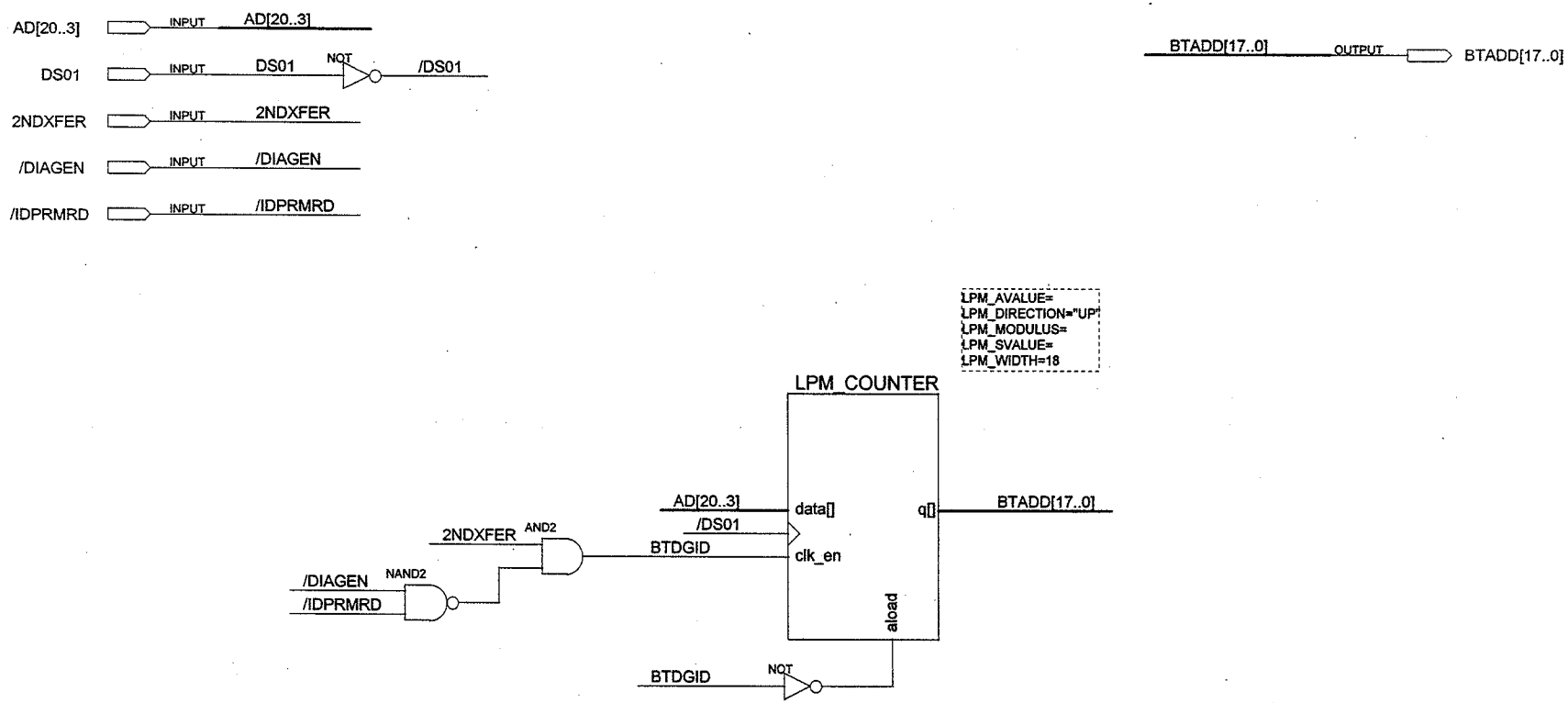

MEMADD.GDF

TITLE	MASTER VME 1 - MEMORY ADDRESS				
COMPANY	ARGONNE NATIONAL LABORATORY				
DESIGNER	J. DAWSON & W. HABERICHTER				
SIZE	C	NUMBER	1.00	REV	12
DATE	9:03a 3-19-2003	SHEET	1	OF	1

RED

VA12

00E500DA

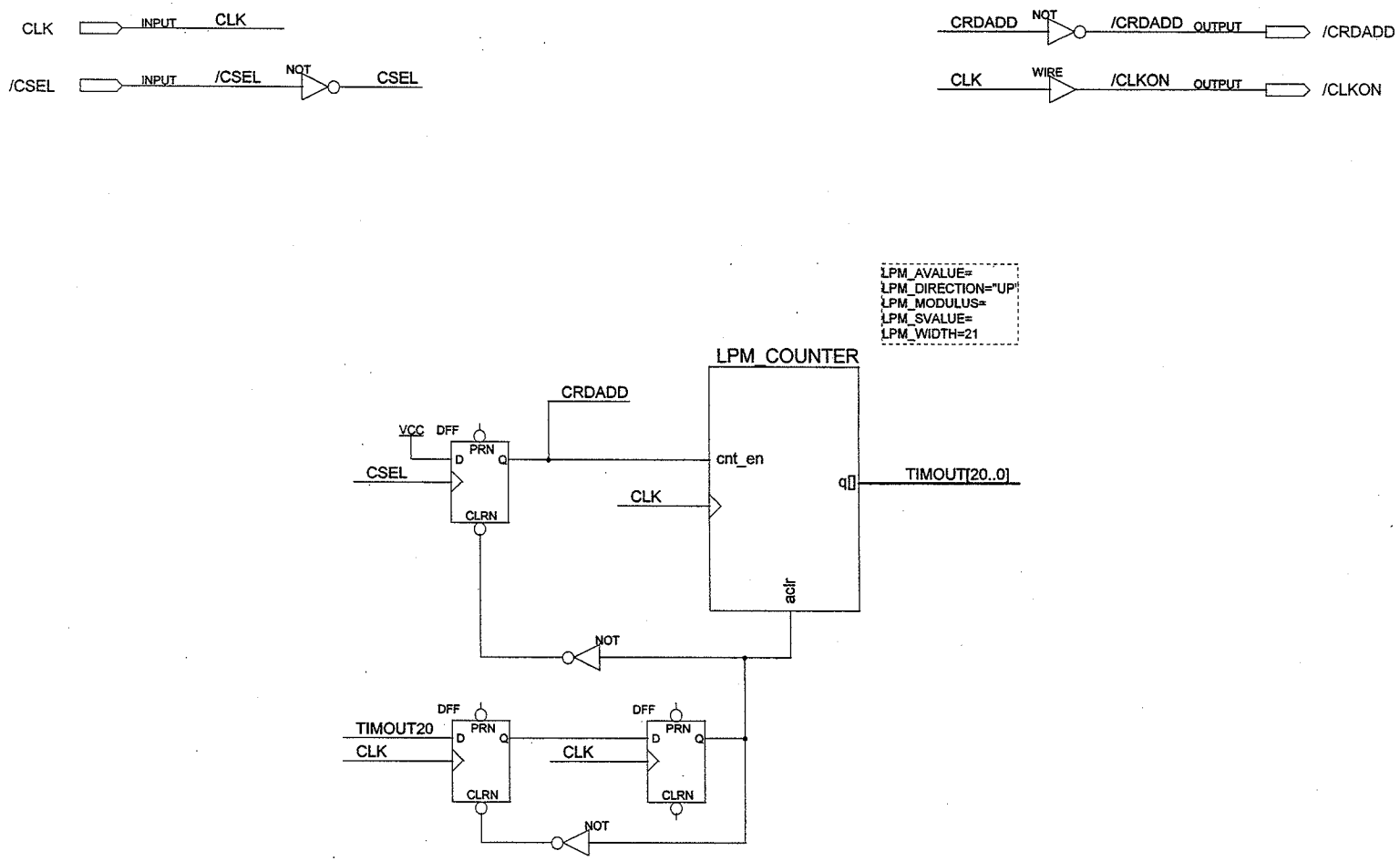

LEDDRVR.GDF

TITLE	MINOS MASTER 1 - LED DRIVER		
COMPANY	ARGONNE NATIONAL LABORATORY		
DESIGNER	J. DAWSON & W. HABERICHTER		
SIZE C	NUMBER 1.00	REV 1	
DATE 4:08p 9-16-2002		SHEET 1	OF 1

00F56D92

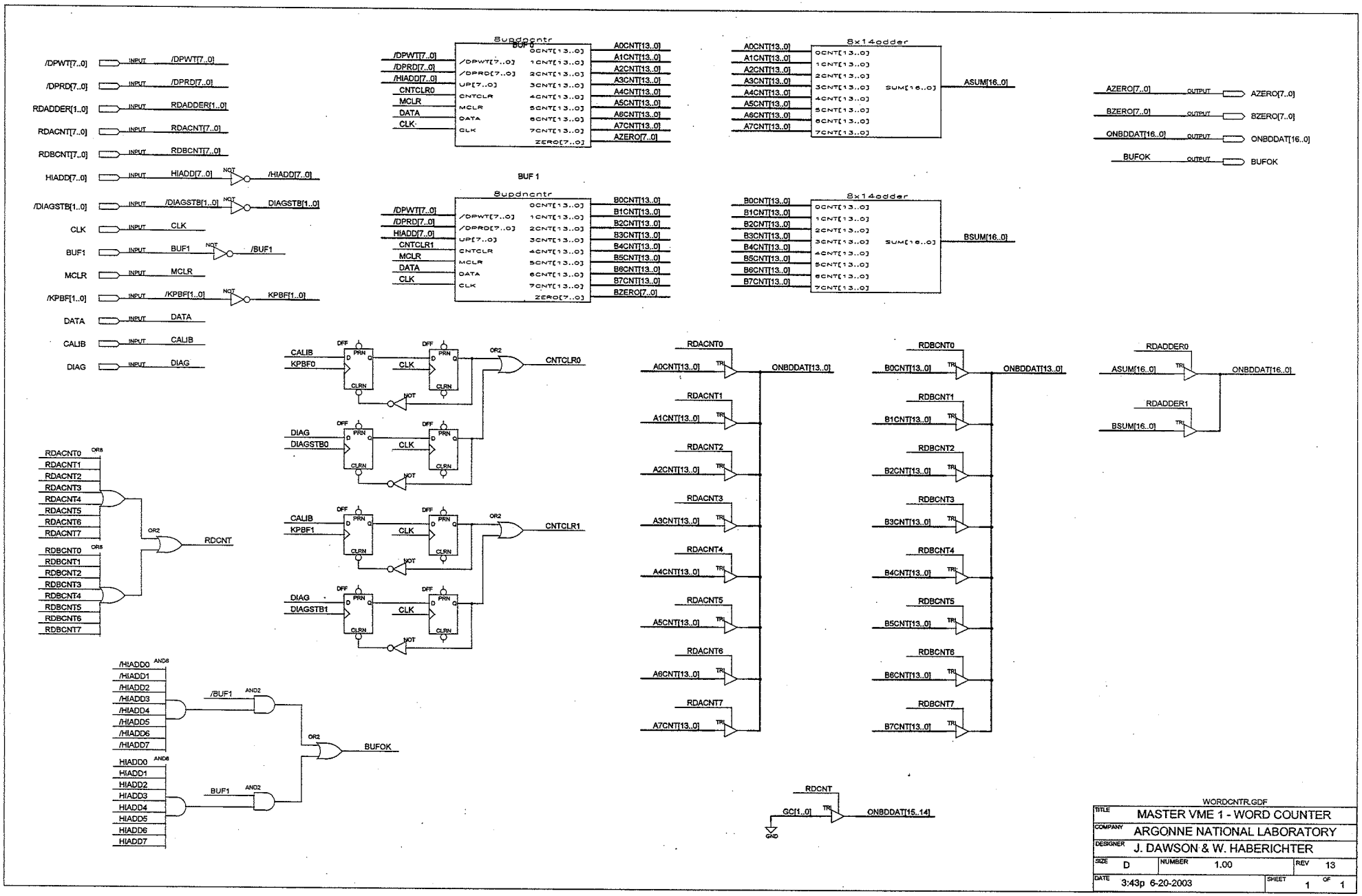

00E5 B703

RED
VA13

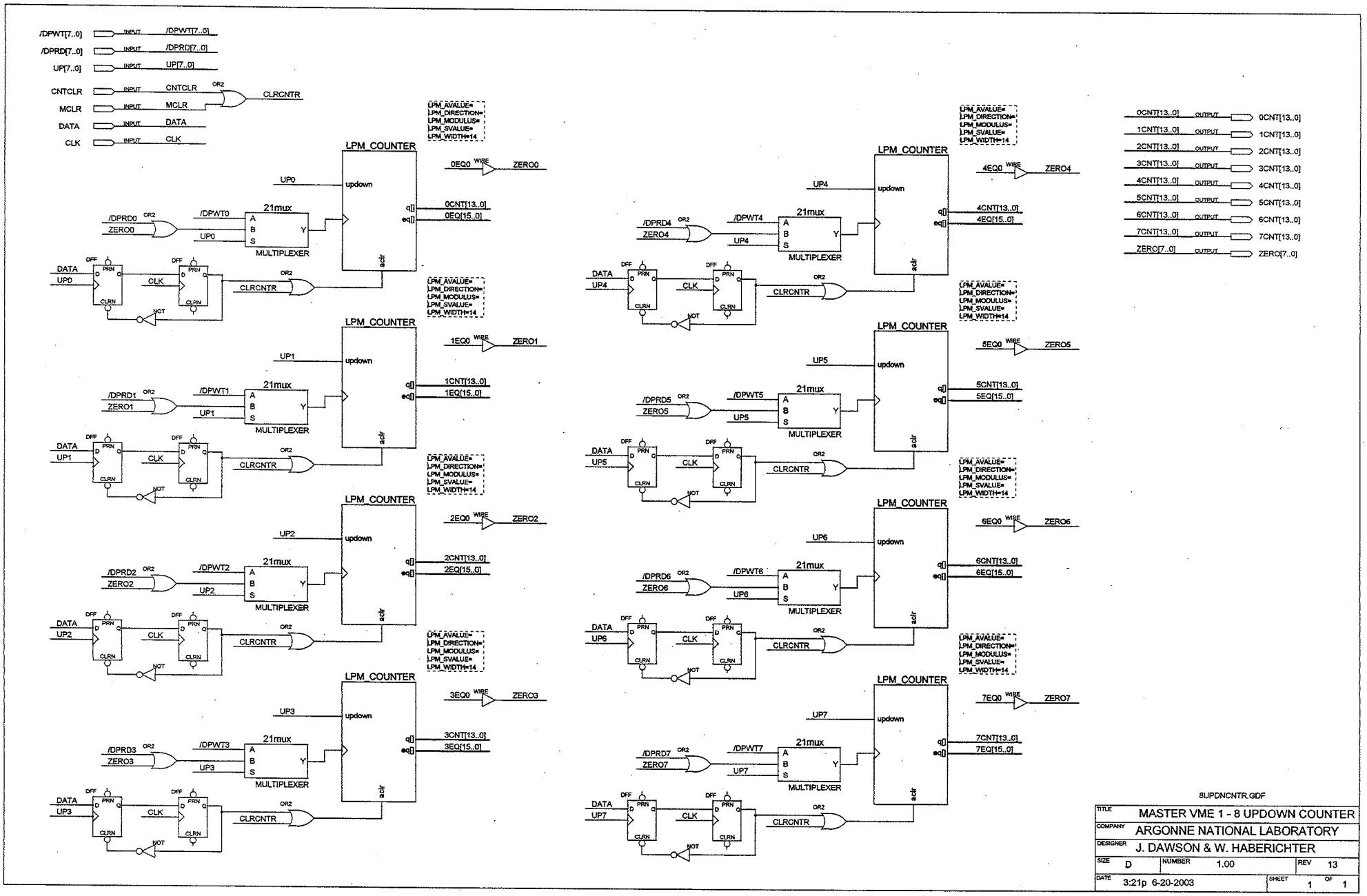

DOE5B703

RED
VA13

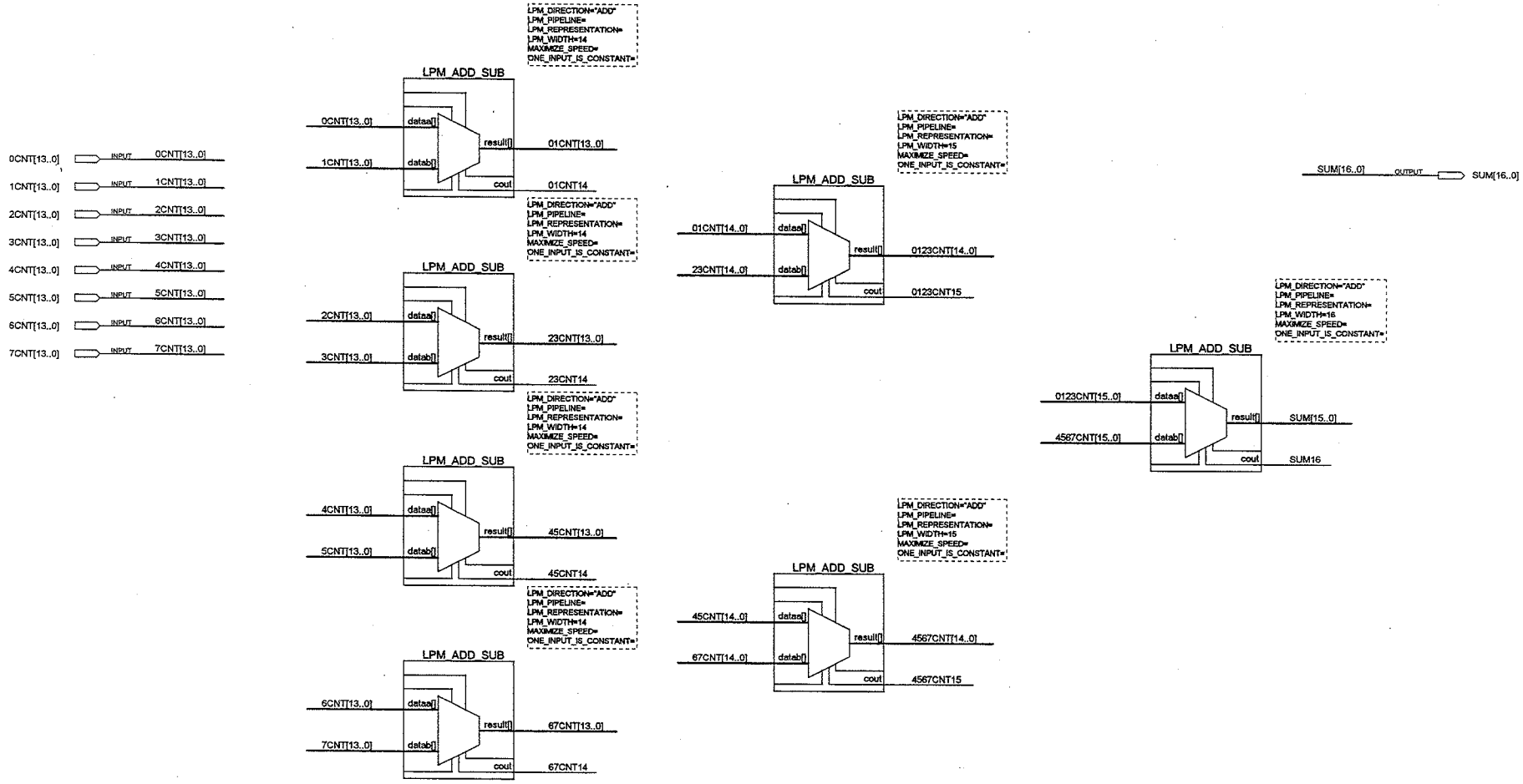

8X14ADDER.GDF

TITLE	MASTER VME 1 - 8 X 14 ADDER		
COMPANY	ARGONNE NATIONAL LABORATORY		
DESIGNER	J. DAWSON & W. HABERICHTER		
SIZE D	NUMBER 1.00	REV 1	
DATE 10:18a 9-18-2002		SHEET 1 OF 1	

00E56D92

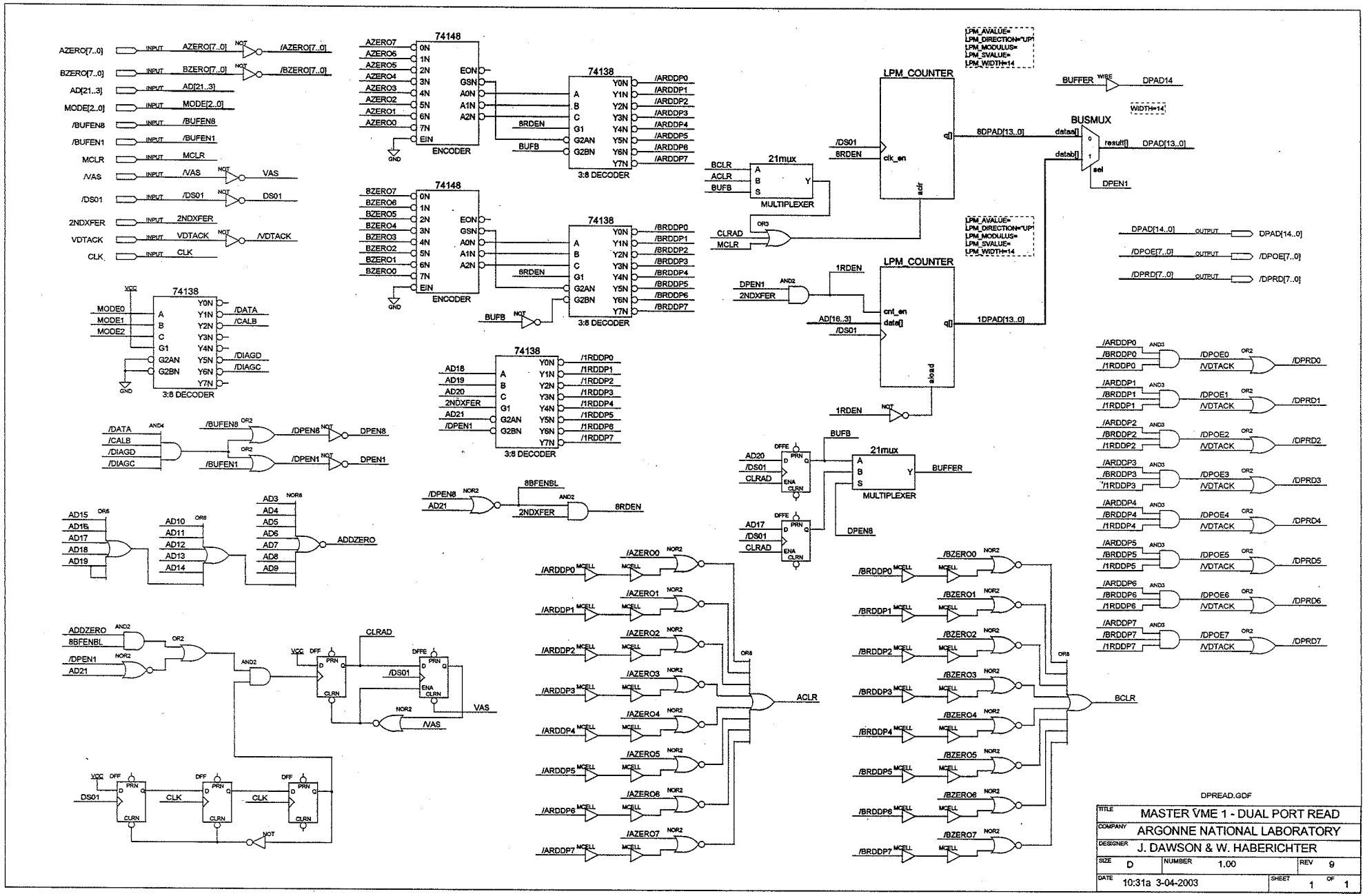

RED

00E5A37C

VA9

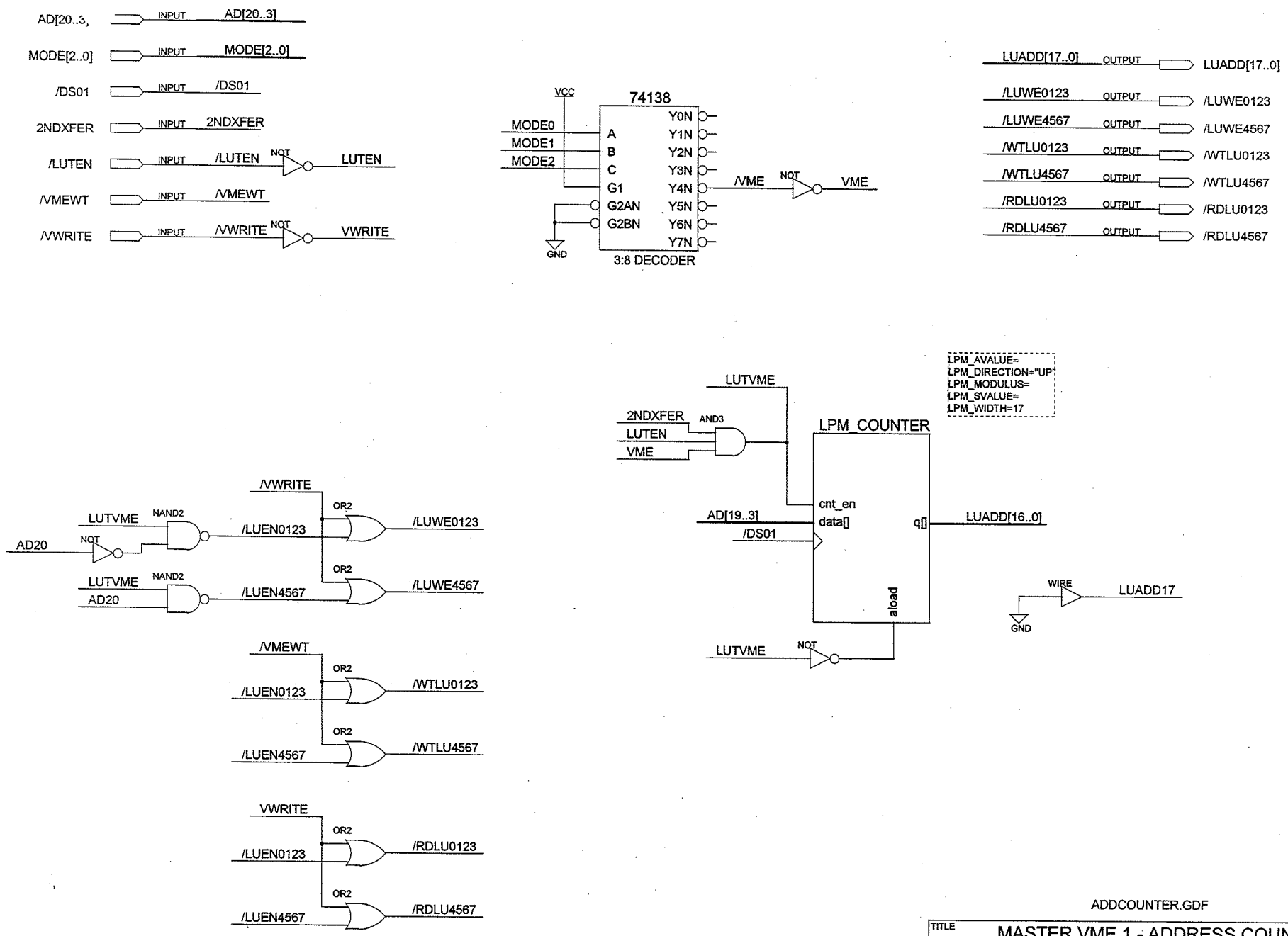

ADDCOUNTER.GDF

TITLE	MASTER VME 1 - ADDRESS COUNTER		
COMPANY	ARGONNE NATIONAL LABORATORY		
DESIGNER	J. DAWSON & W. HABERICHTER		
SIZE C	NUMBER 1.00	REV 1	
DATE 4:57p 9-16-2002		SHEET 1 OF 1	

D0E2 6D92

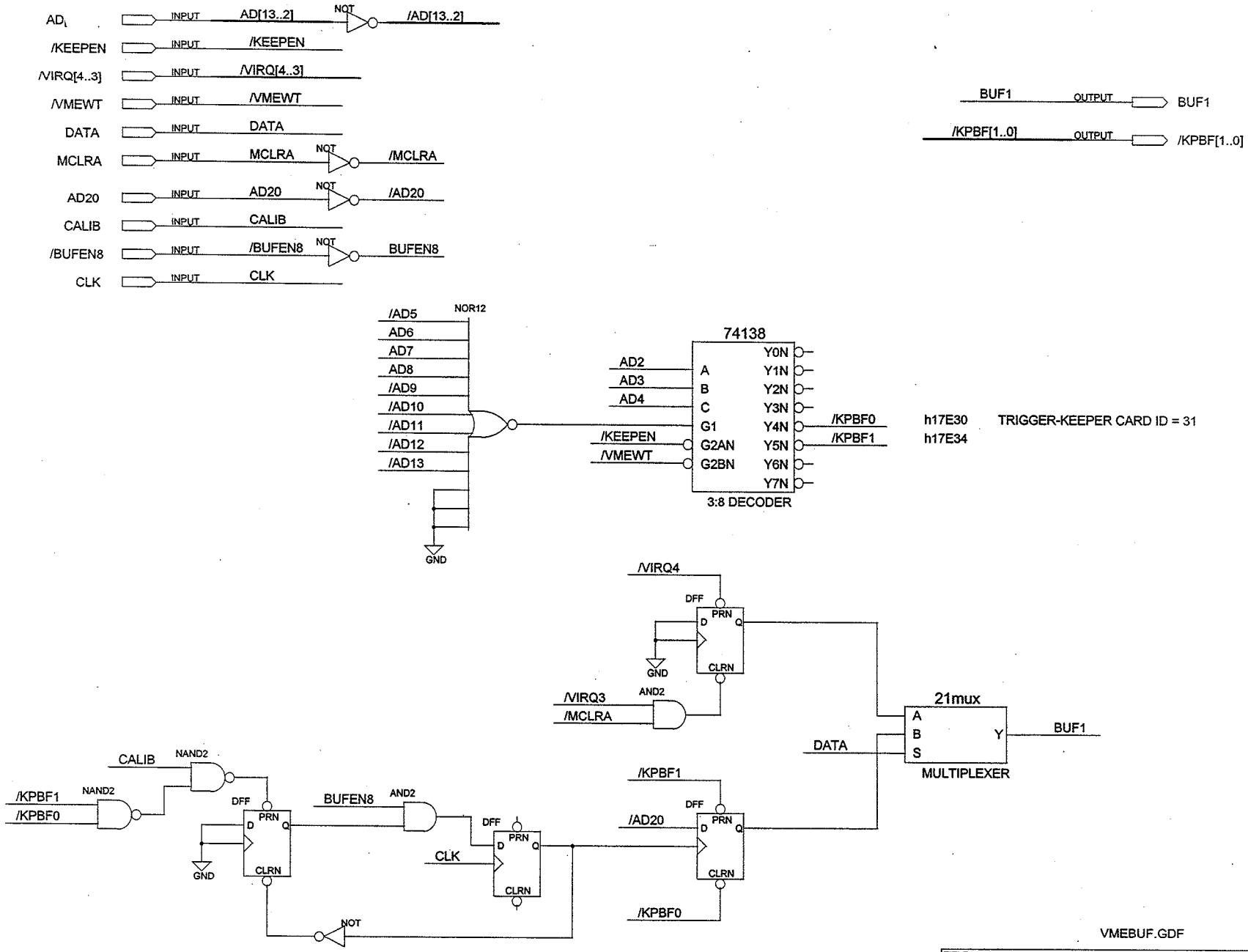

VMEBUF.GDF

TITLE	MASTER VME 1 - VME BUFFER		
COMPANY	ARGONNE NATIONAL LABORATORY		
DESIGNER	J. DAWSON & W. HABERICHTER		
SIZE C	NUMBER 1.00		REV 5
DATE 12:21p 11-11-2002		SHEET 1	OF 1

RED
VAS

00E5A52B

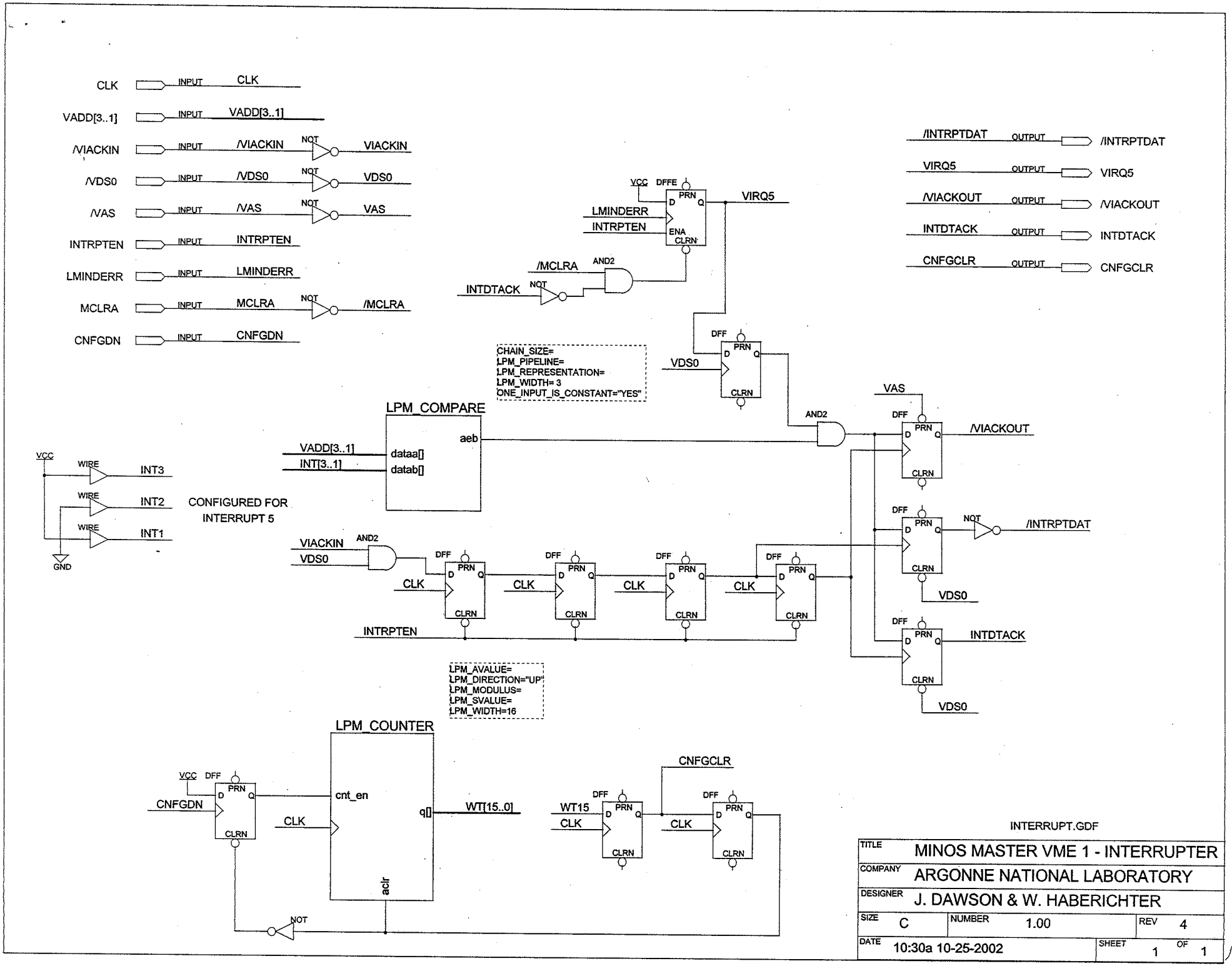

RED
VA4

00E5BB3C

MINOS MASTER Module

Registers Firmware

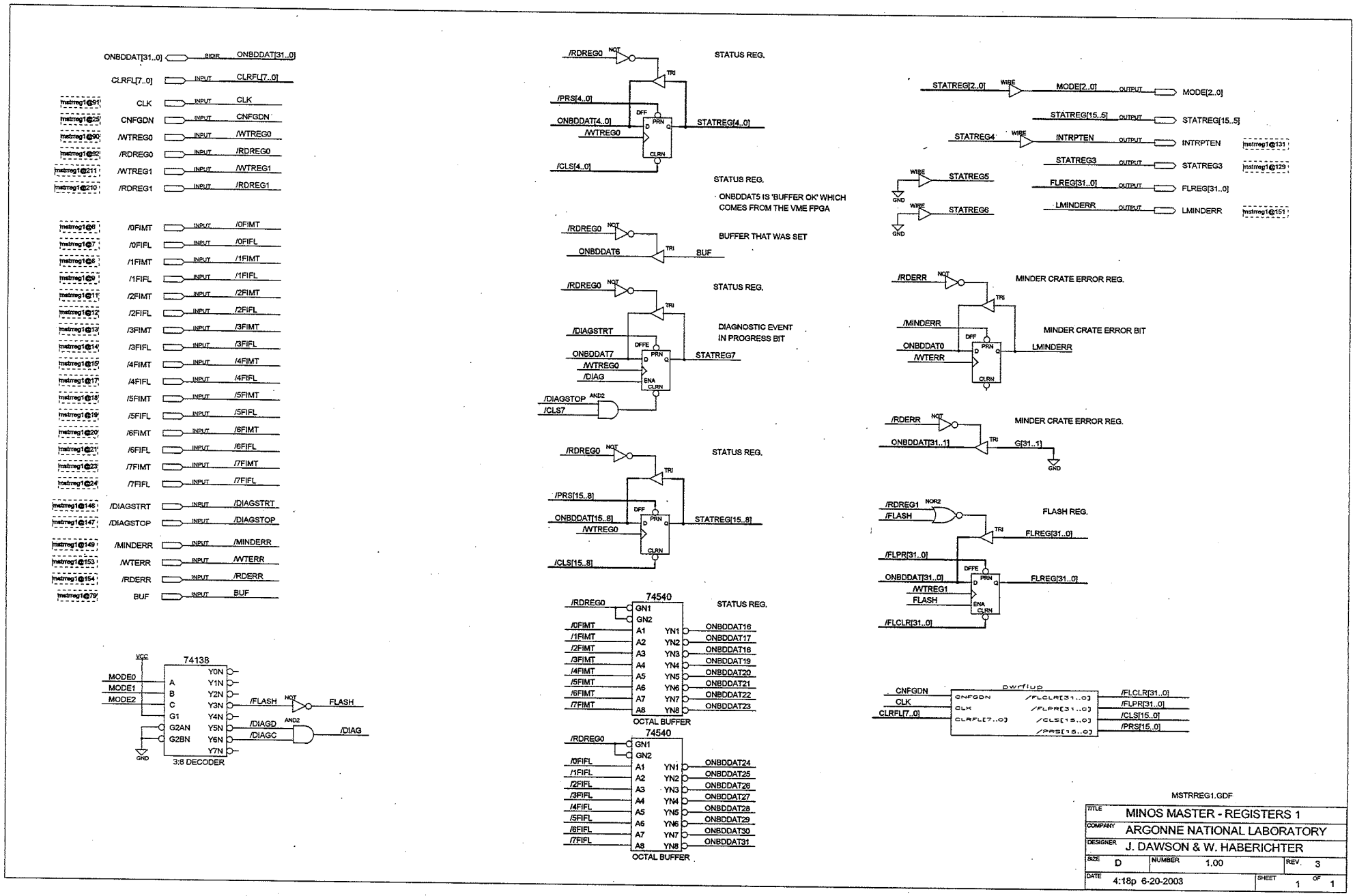

00178D3E

GRN
RA3

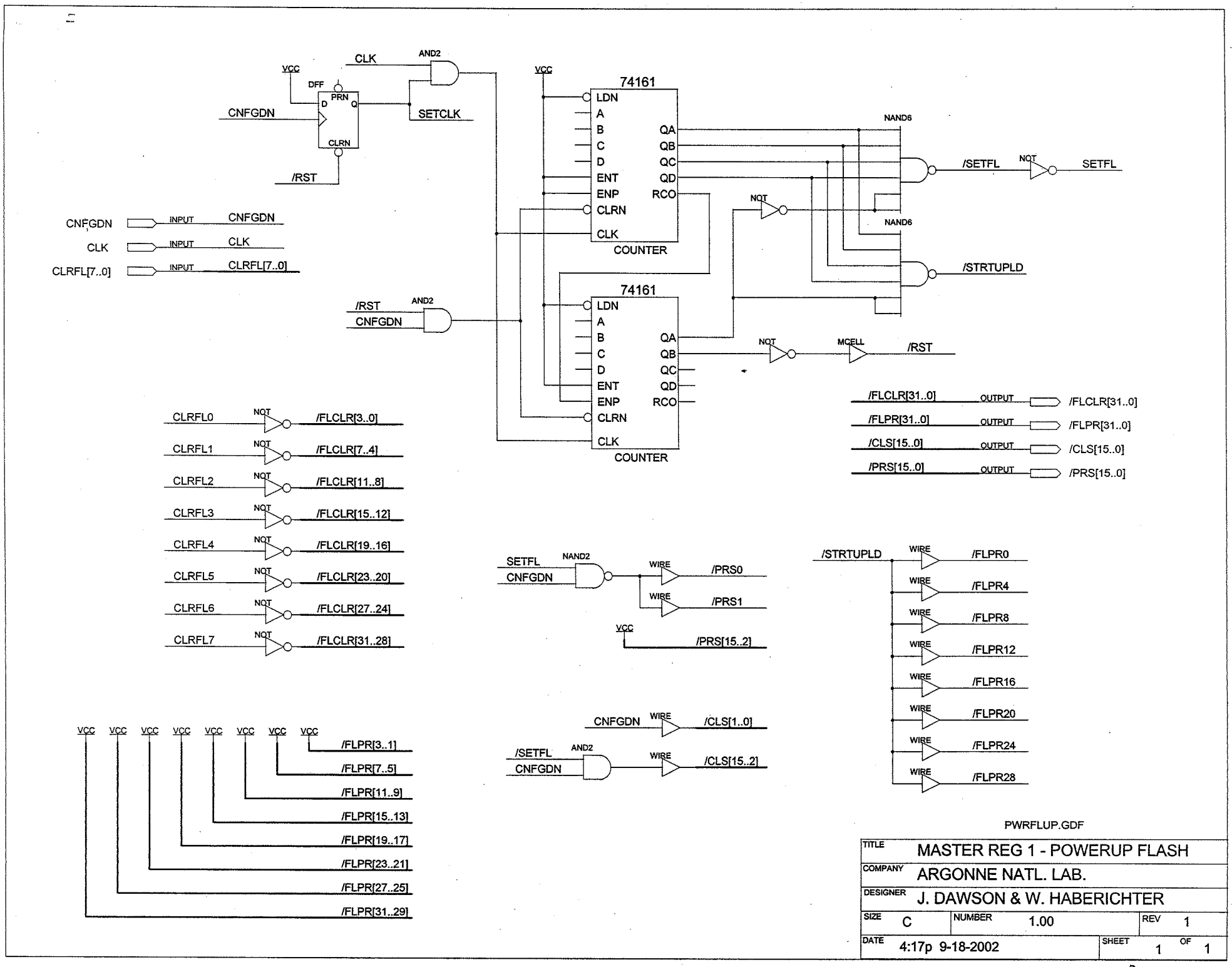

PWRFLUP.GDF

TITLE	MASTER REG 1 - POWERUP FLASH		
COMPANY	ARGONNE NATL. LAB.		
DESIGNER	J. DAWSON & W. HABERICHTER		
SIZE C	NUMBER 1.00	REV 1	
DATE 4:17p 9-18-2002	SHEET 1	OF 1	

GRN
RA1

00178834

MINOS MASTER Module

Diagnostic Memory Firmware

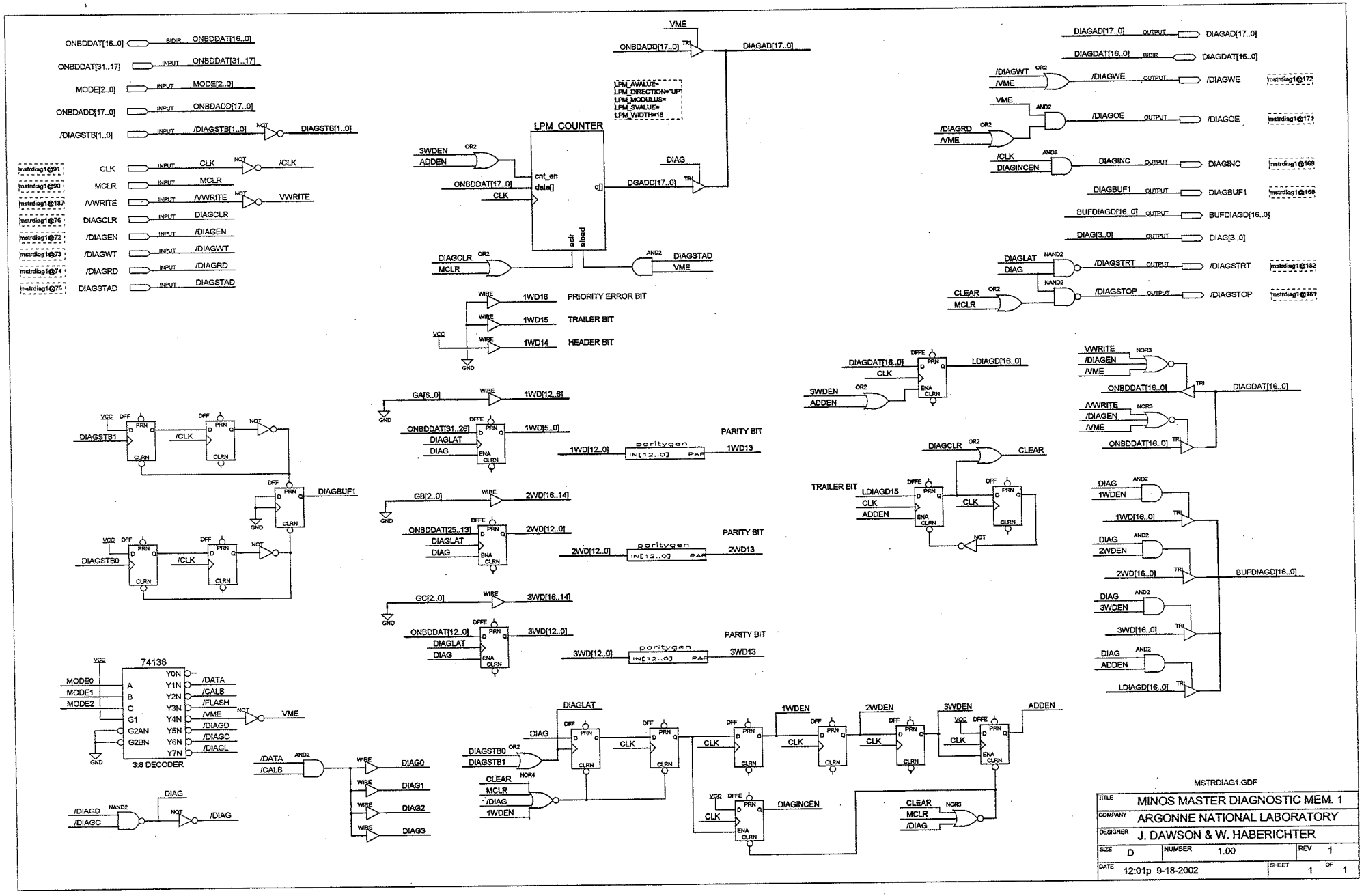

0018BE05

WHT
DA 1

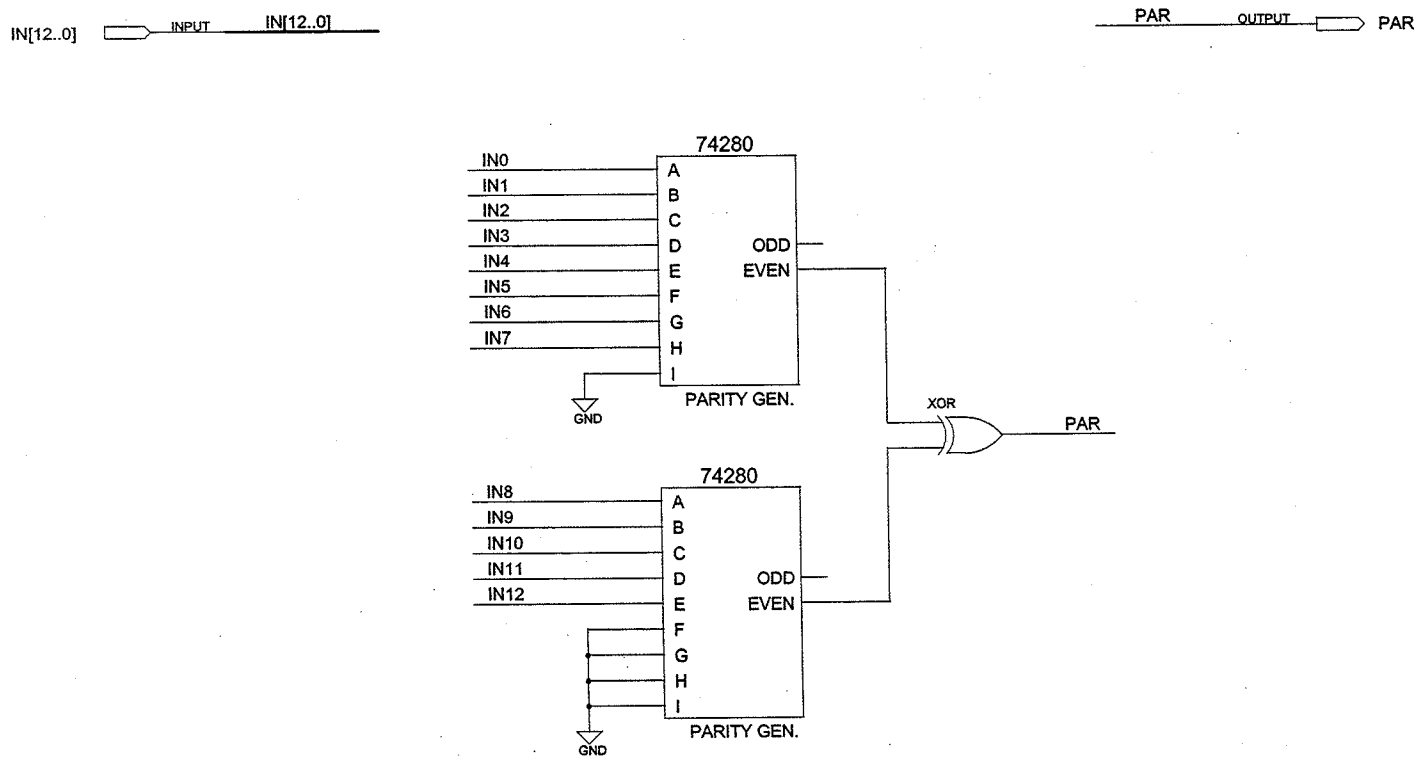

PARITYGEN.GDF

TITLE	MASTER DIAGNOSTIC 1 - PARITY GEN.
COMPANY	ARGONNE NATIONAL LABORATORY
DESIGNER	J. DAWSON & W. HABERICHTER
SIZE C	NUMBER 1.00 REV 1
DATE 11:52a 9-18-2002	SHEET 1 OF 1

0018BE05

MINOS MASTER Module

Timestamp Firmware

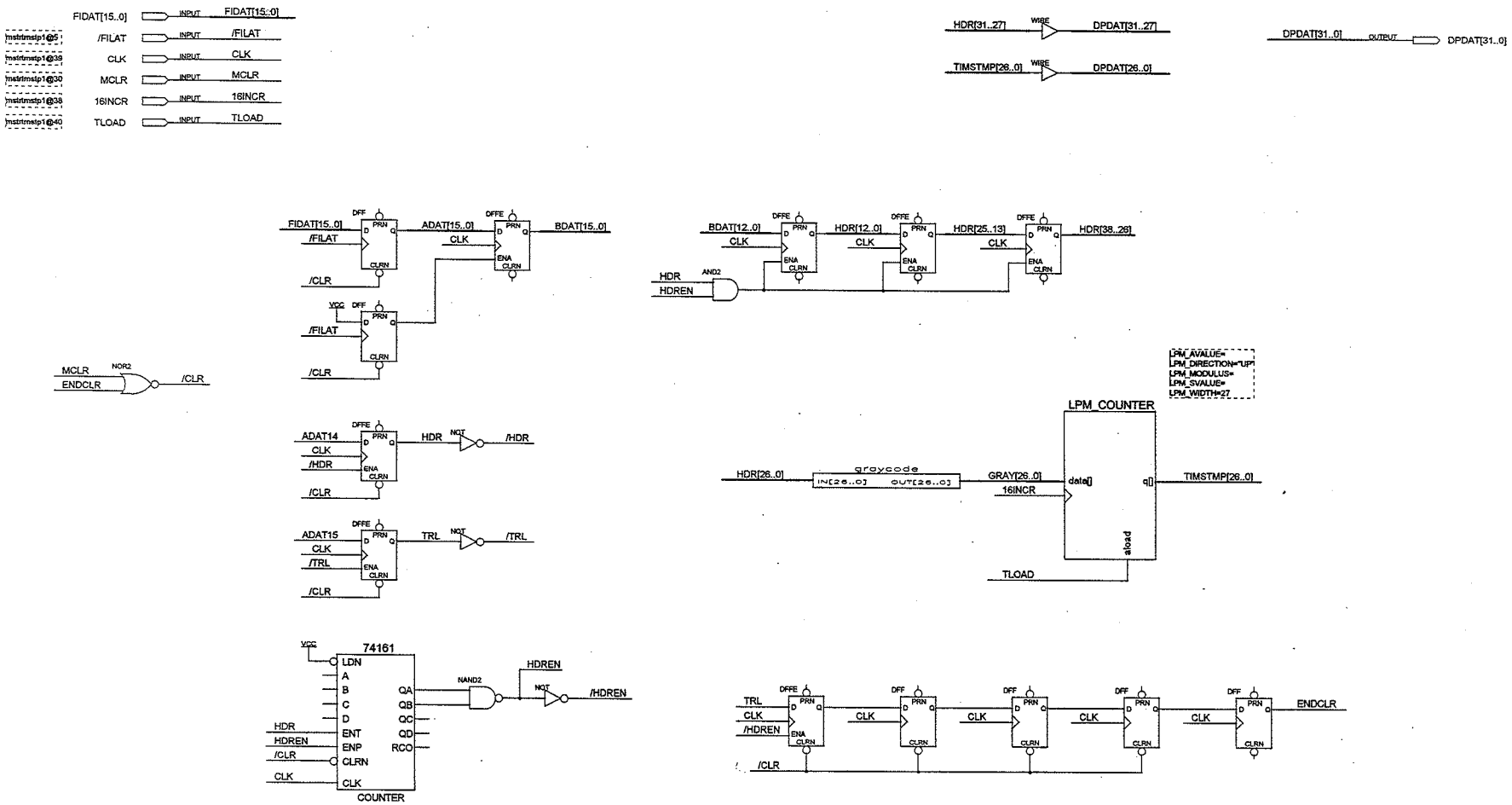

MSTRTMSTP1.GDF

TITLE	MINOS MASTER TIMESTAMP 1
COMPANY	ARGONNE NATIONAL LABORATORY
DESIGNER	J. DAWSON & W. HABERICHTER
SIZE D	NUMBER 1.00 / REV 1
DATE 11:30a 9-18-2002	SHEET 1 OF 1

009FF1EB

LTB
TA1

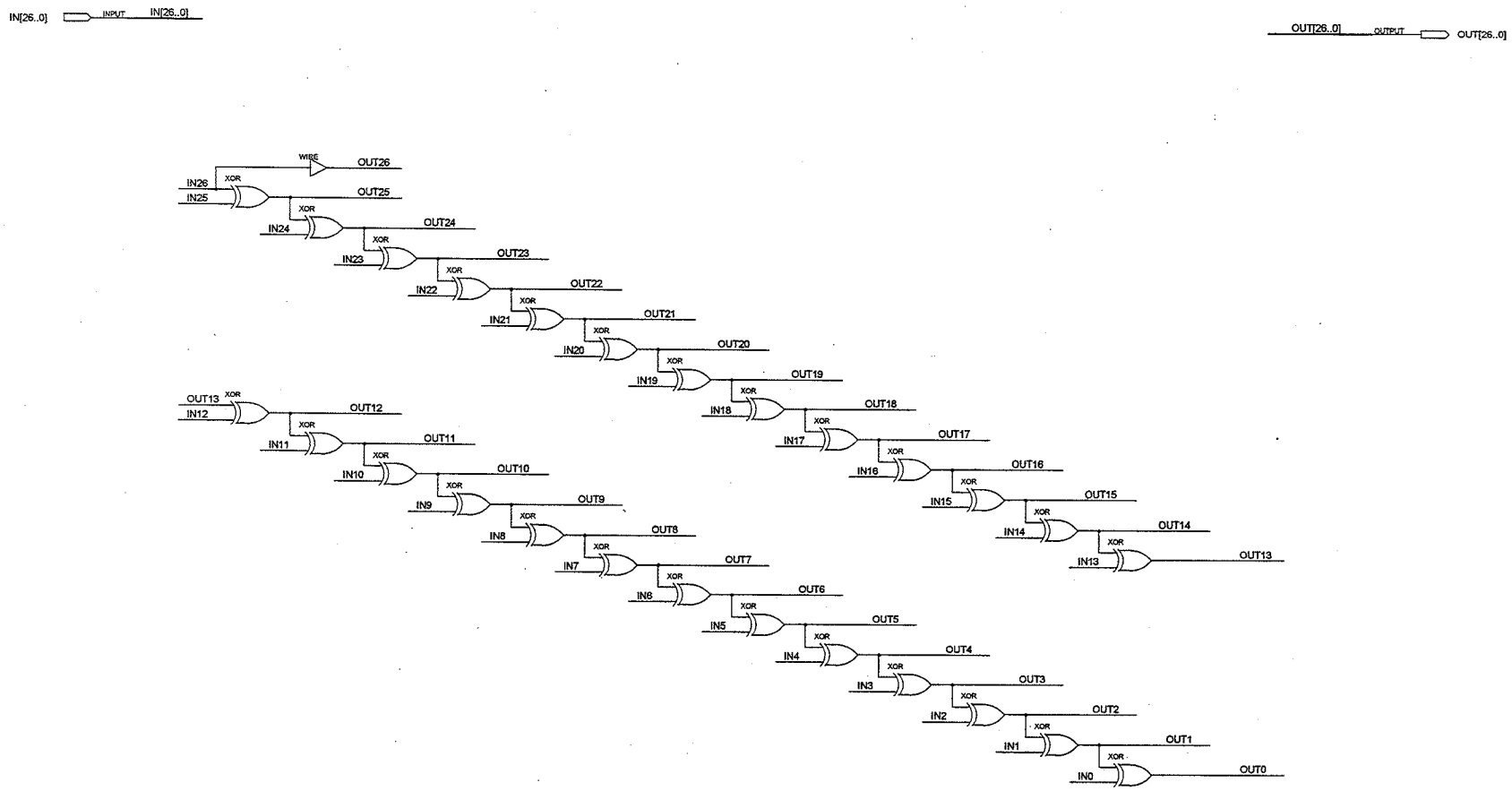

GRAYCODE.GDF

TITLE	MASTER TIMESTAMP 1 - GRAY CODE
COMPANY	ARGONNE NATIONAL LABORATORY
DESIGNER	J. DAWSON & W. HABERICHTER
SIZE D	NUMBER 1.00 REV 1
DATE 11:35a 9-18-2002	SHEET 1 OF 1

009FF1EB

MINOS MASTER Module

Data Translator Firmware

MINOS MASTER Module

DAQ Firmware

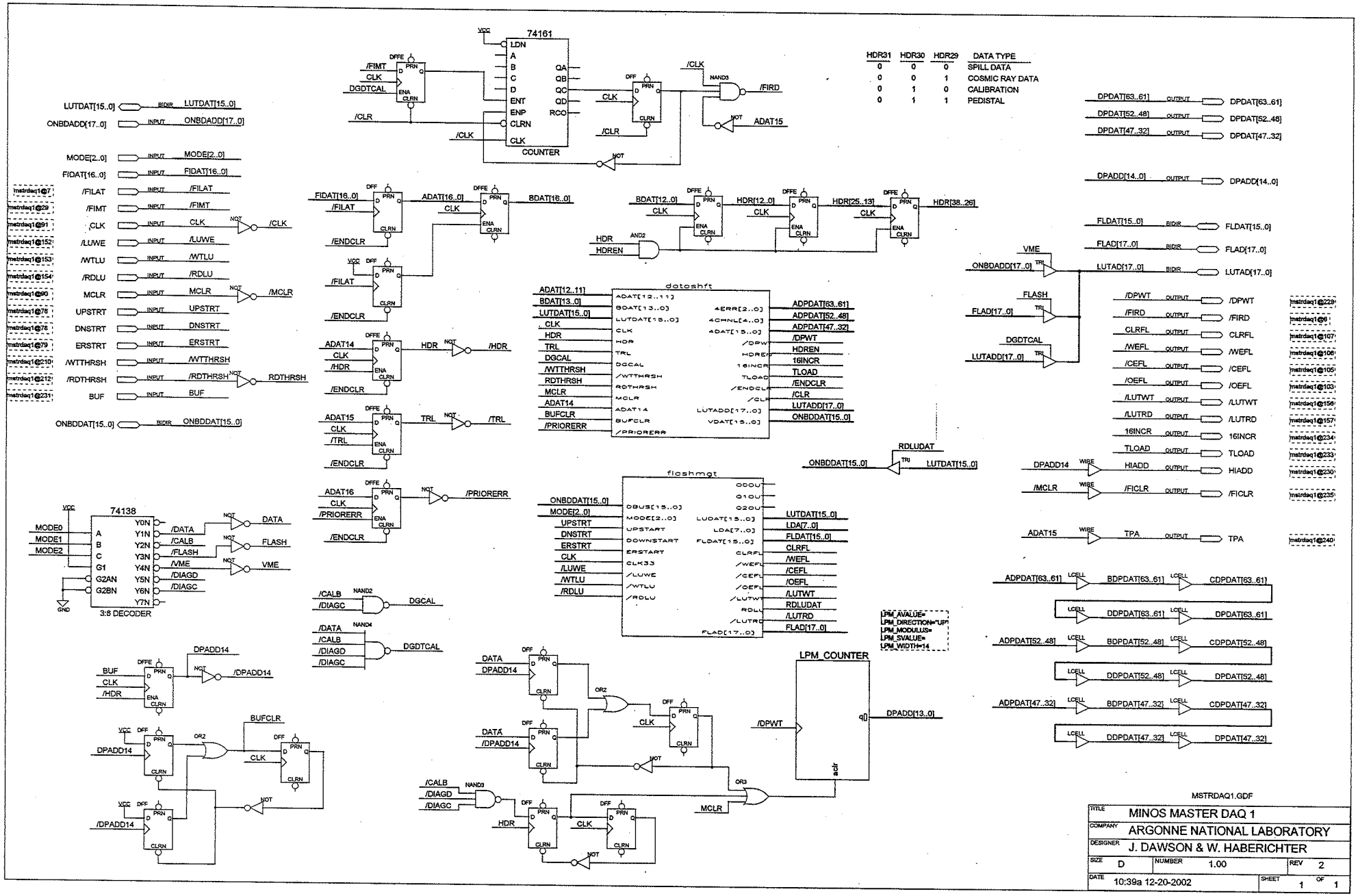

001CB30C

ORG
A2

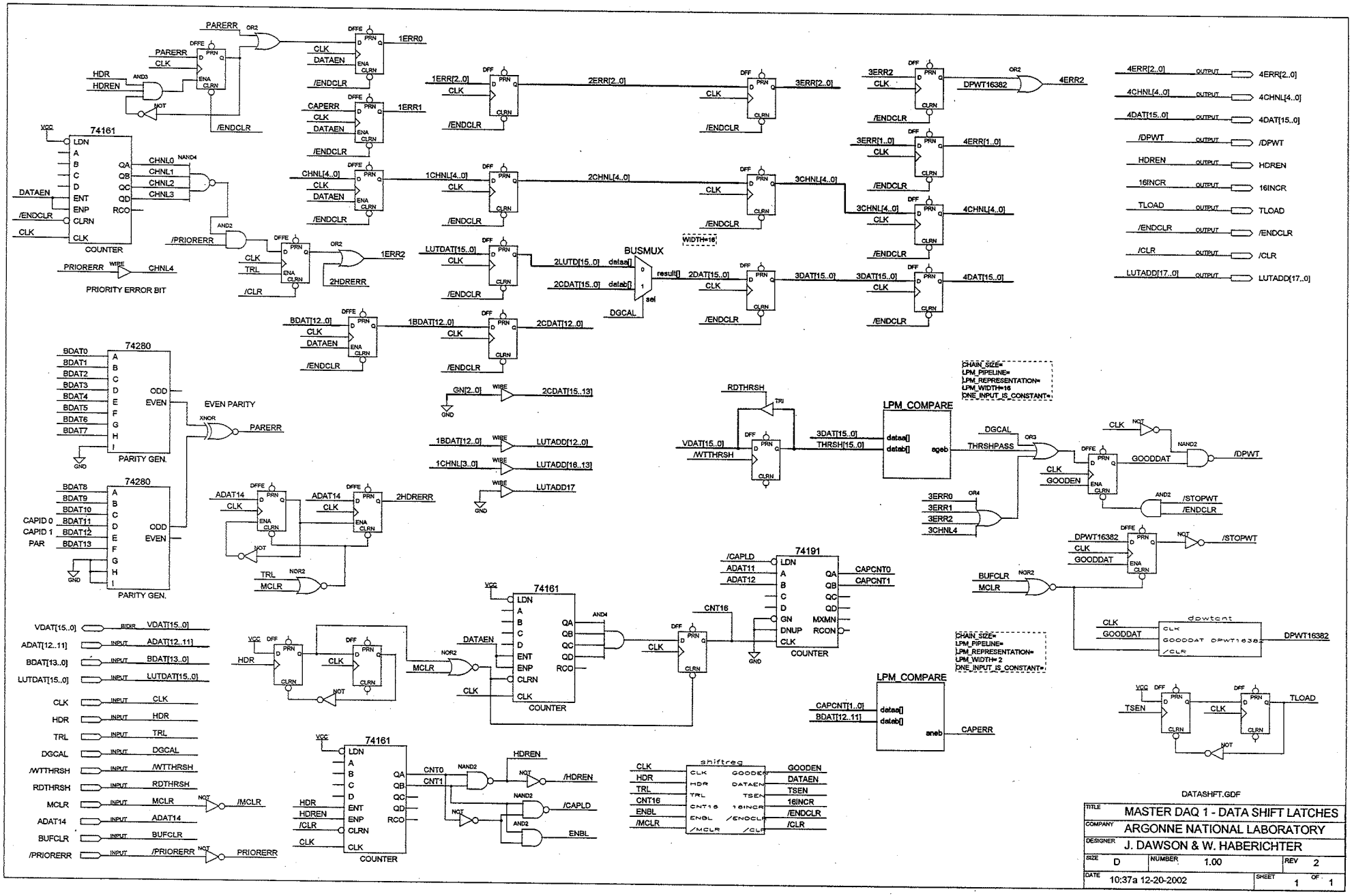

001CB30C

ORG A2

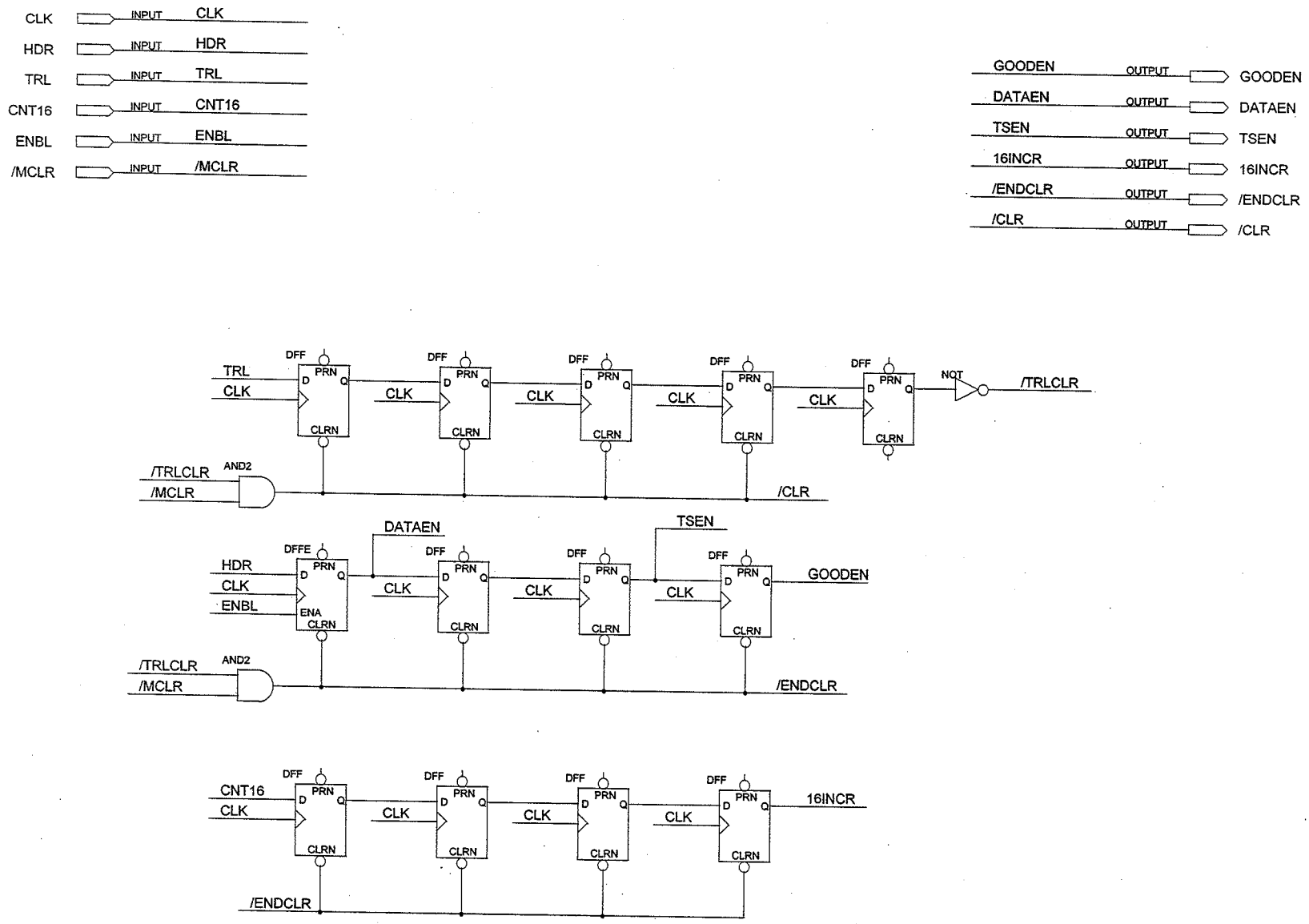

SHIFTREG.GDF

TITLE	MASTER DAQ 1 - SHIFT REGISTERS
COMPANY	ARGONNE NATIONAL LABORATORY
DESIGNER	J. DAWSON & W. HABERICHTER
SIZE C	NUMBER 1.00 REV 1
DATE 4:30p 9-16-2002	SHEET 1 OF 1

001C5FA0

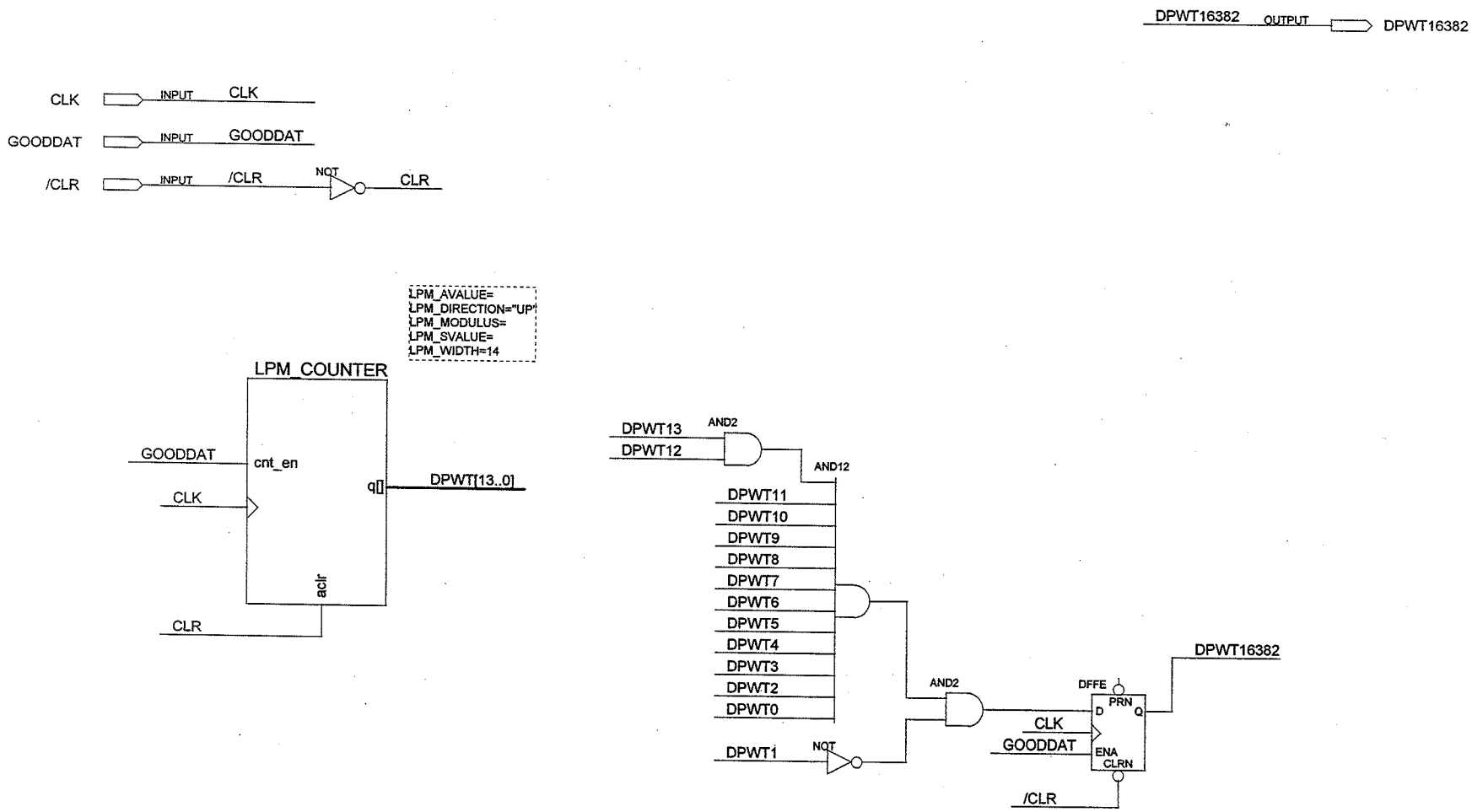

DPWTCNT.GDF

TITLE	MASTER DAQ 1 - DUAL PORT WRT CNTR		
COMPANY	ARGONNE NATIONAL LABORATORY		
DESIGNER	J. DAWSON & W. HABERICHTER		
SIZE C	NUMBER 1.00	REV 1	
DATE 4:30p 9-16-2002		SHEET 1	OF 1