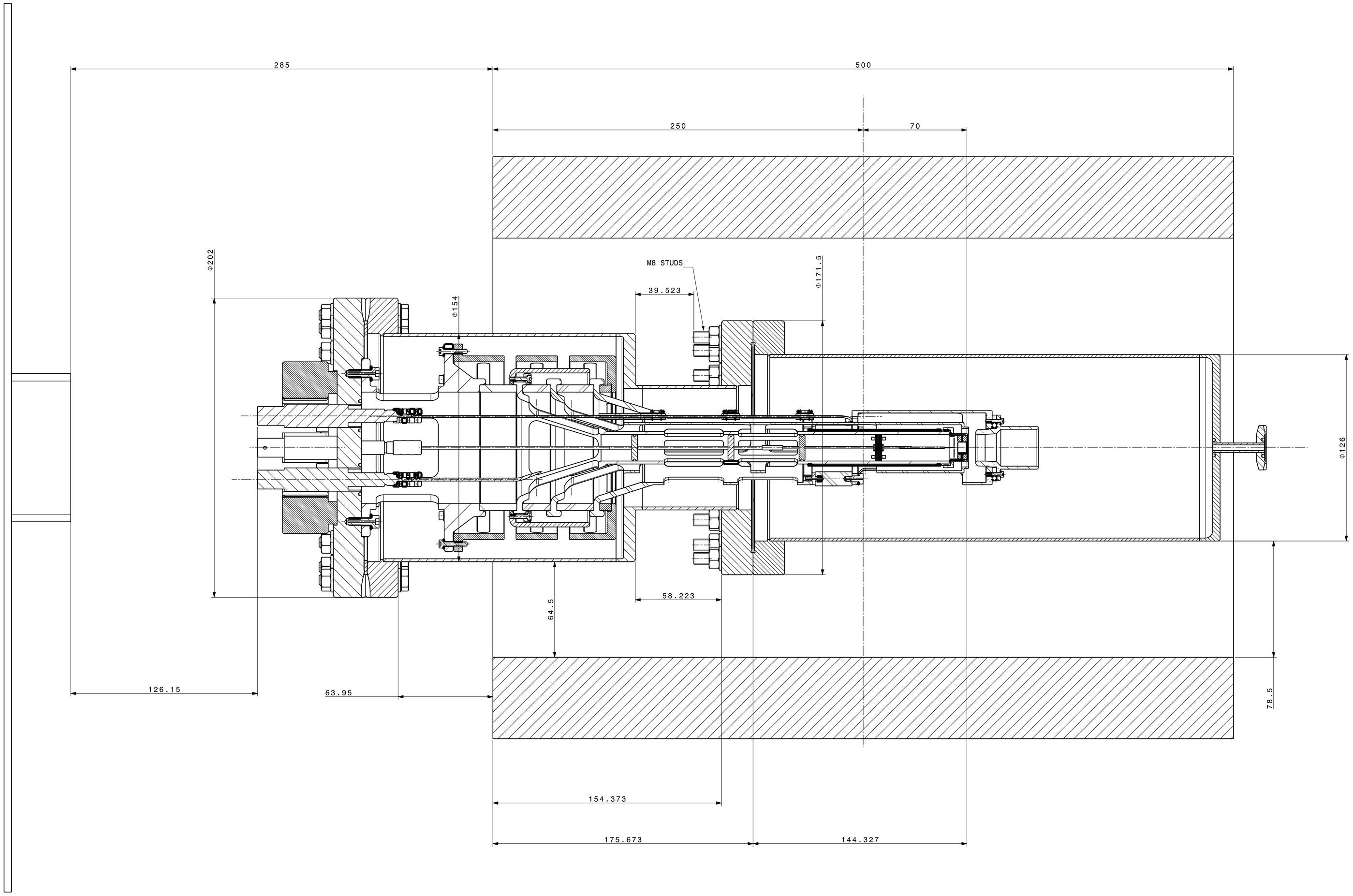

WHERE USED Not Applicable [Last checked at 2020-10-22 11:28]			
DESIGNATION FERMILAB TEST STAND INTEGRATION	DESIGNED	A.KOLEHMAINEN	FORMAT A0
	CHECKED		
	RELEASED		SCALE 1:1
	APPROVED		
EQUIPMENT CODE	DESIGNED 2020-10-22		
REFERENCES Doc No: ST1375864_02	INDEX	LABEL NOT VALID FOR EXECUTION	SHEET 1/1