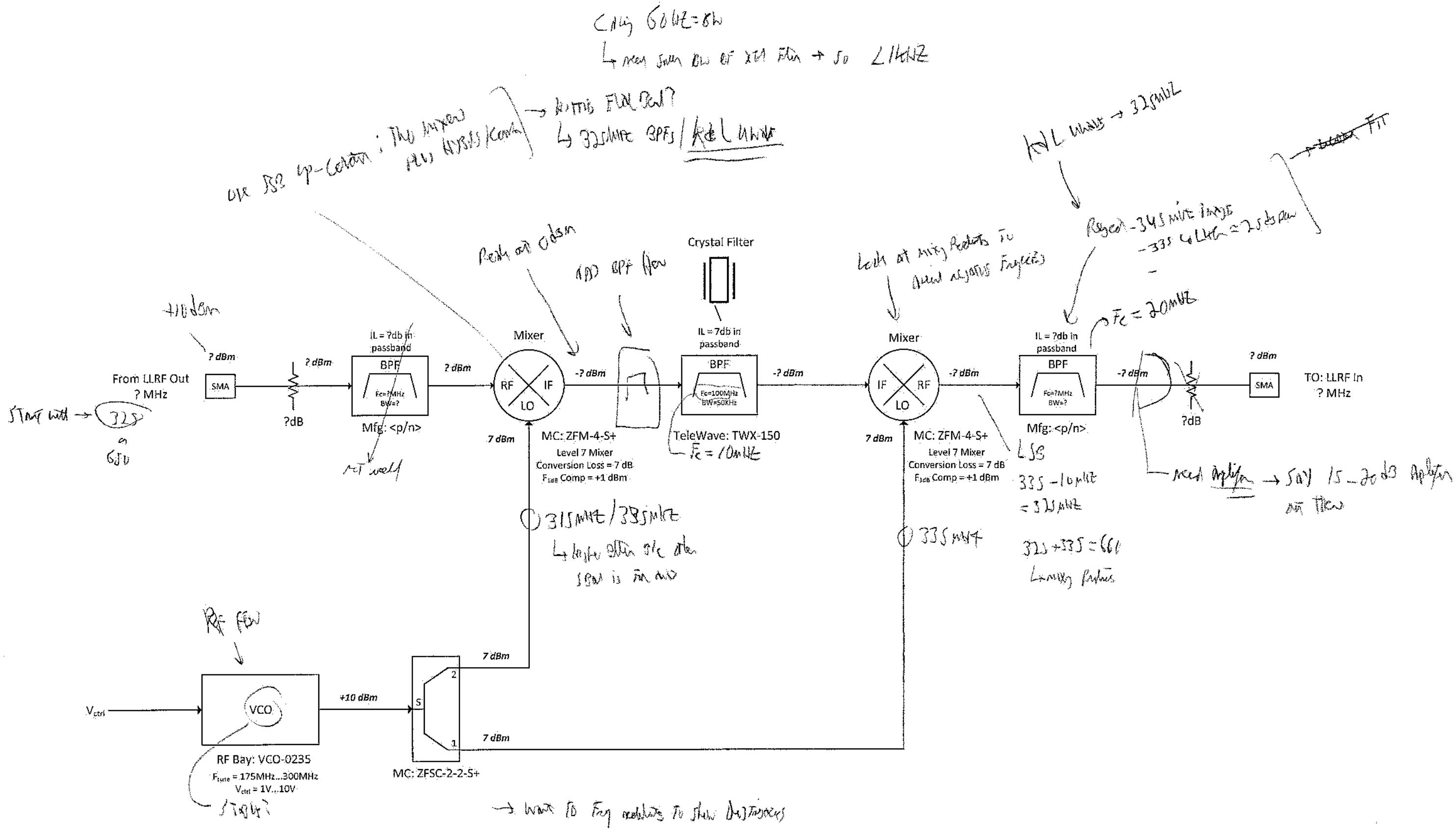

Notes:
1) Crystal filter emulates RF cavity

2) Mixer LO is adjusted to emulate detuning

3) Prelimary design – needs detail frequency and signal level information

FNAL PIP-II Low Level RF System *Analog RF Cavity Emulator* Signal Interconnect
Version 0
Date: 07-27-2020 JED