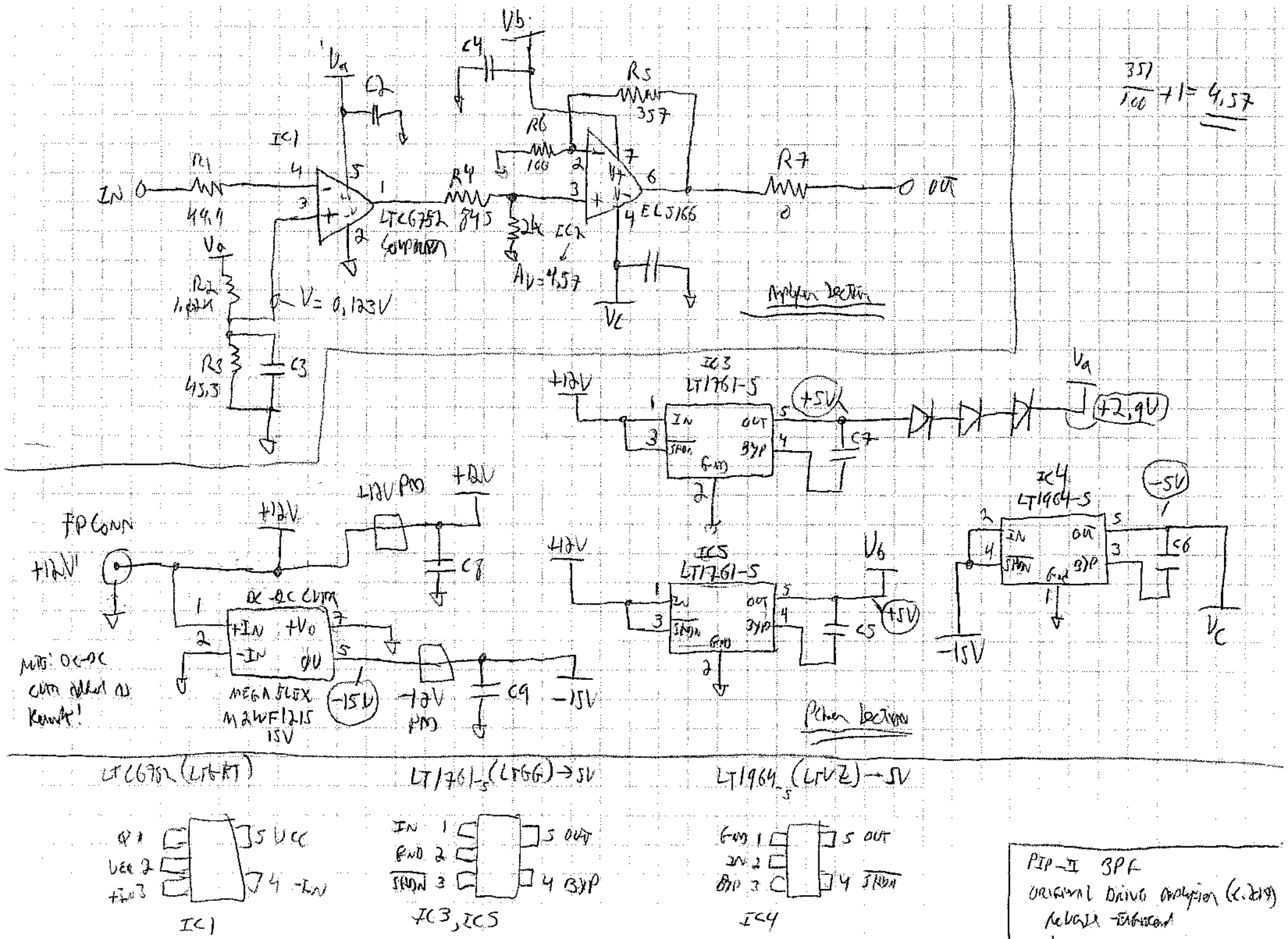

$\frac{357}{100} + 1 = 4.57$

PIP-II BPF
ORIGINAL DRIVE Amplifier (c.2019)
Release - Engineered
JED/FNAL-AD-LLRF 7-23-2020