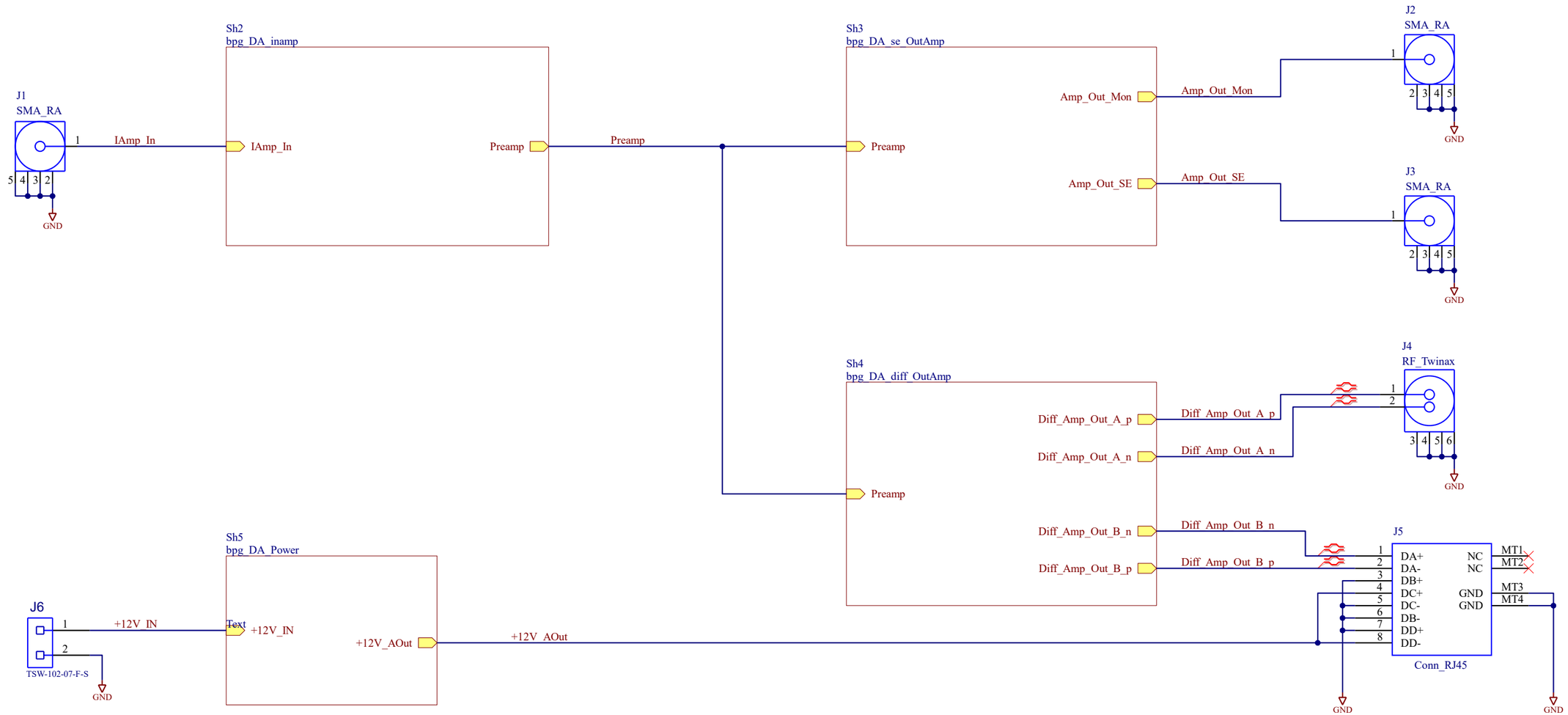

Rework:
All changes/rework from original design will be noted in this color

Rework is found on the following pages:
- Page 2
- Page 3
- Page 4

PIP-II IT Beam Pattern Generator

BPG Drive Amplifier -- Top Level

Fermilab

Operated by Fermi Research Alliance, LLC under Contract No. DE-AC02-07CH11359 with the United States Department of Energy.

Size B	Rev A	BPG Drive Amplifier-Top	ENGINEER: J. E. Dusatko DRAWN: J. E. Dusatko CHECKED: D. Klepec APPROVED:
Number *	Date: 9/16/2020 Time: 3:17:50 PM	Sheet 1 of 5	

Y:\Projects\LLRF\Systems\PIP2IT\Hardware\BPG\drive_amp\sch_pcb\bpg_drive_amp\bpg_drive

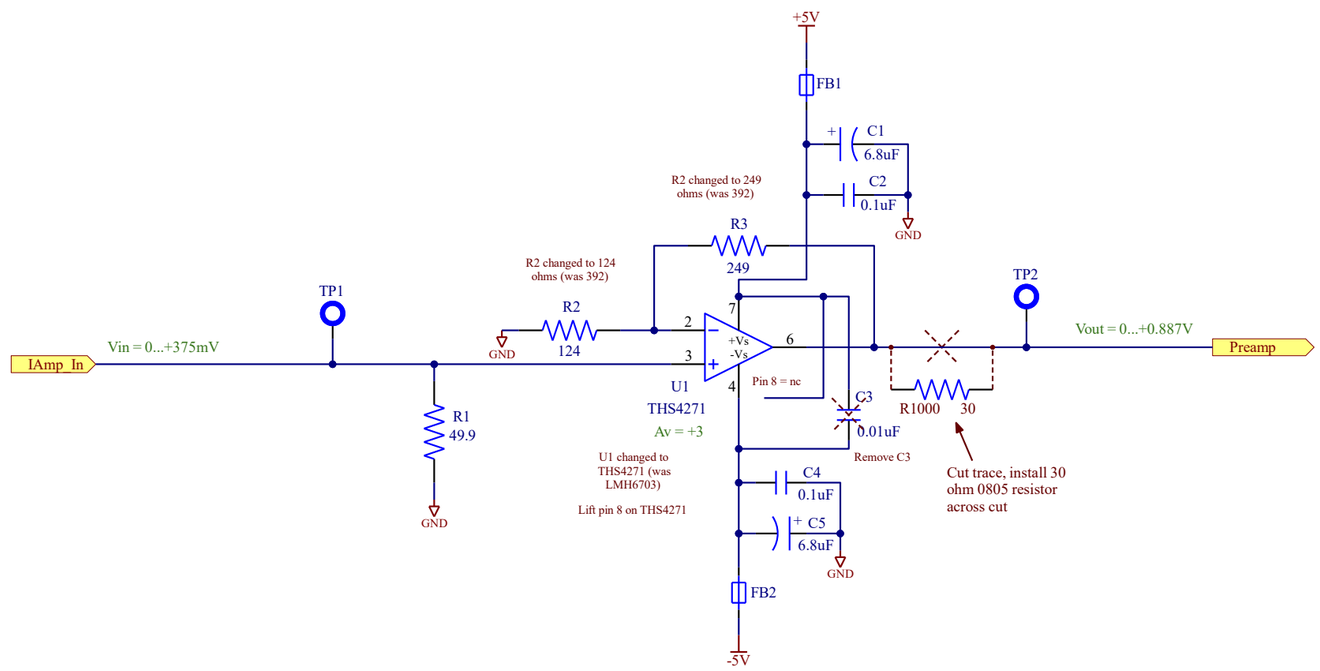

PIP-II IT Beam Pattern Generator

BPG Drive Amplifier -- Input Amplifier

Fermilab

Operated by Fermi Research Alliance, LLC under Contract No. DE-AC02-07CH11359 with the United States Department of Energy.

Size B	Rev A	BPG Drive Amp - In Amp	ENGINEER: J. E. Dusatko DRAWN: J. E. Dusatko CHECKED: D. Klepec APPROVED: *
Number *	Date: 9/16/2020 Time: 3:17:50 PM	Sheet 2 of 5	

Y:\Projects\LLRF\Systems\PIP2IT\Hardware\BPG\drive_amp\sch_pcb\bpg_drive_amp\bpg_DA_ina

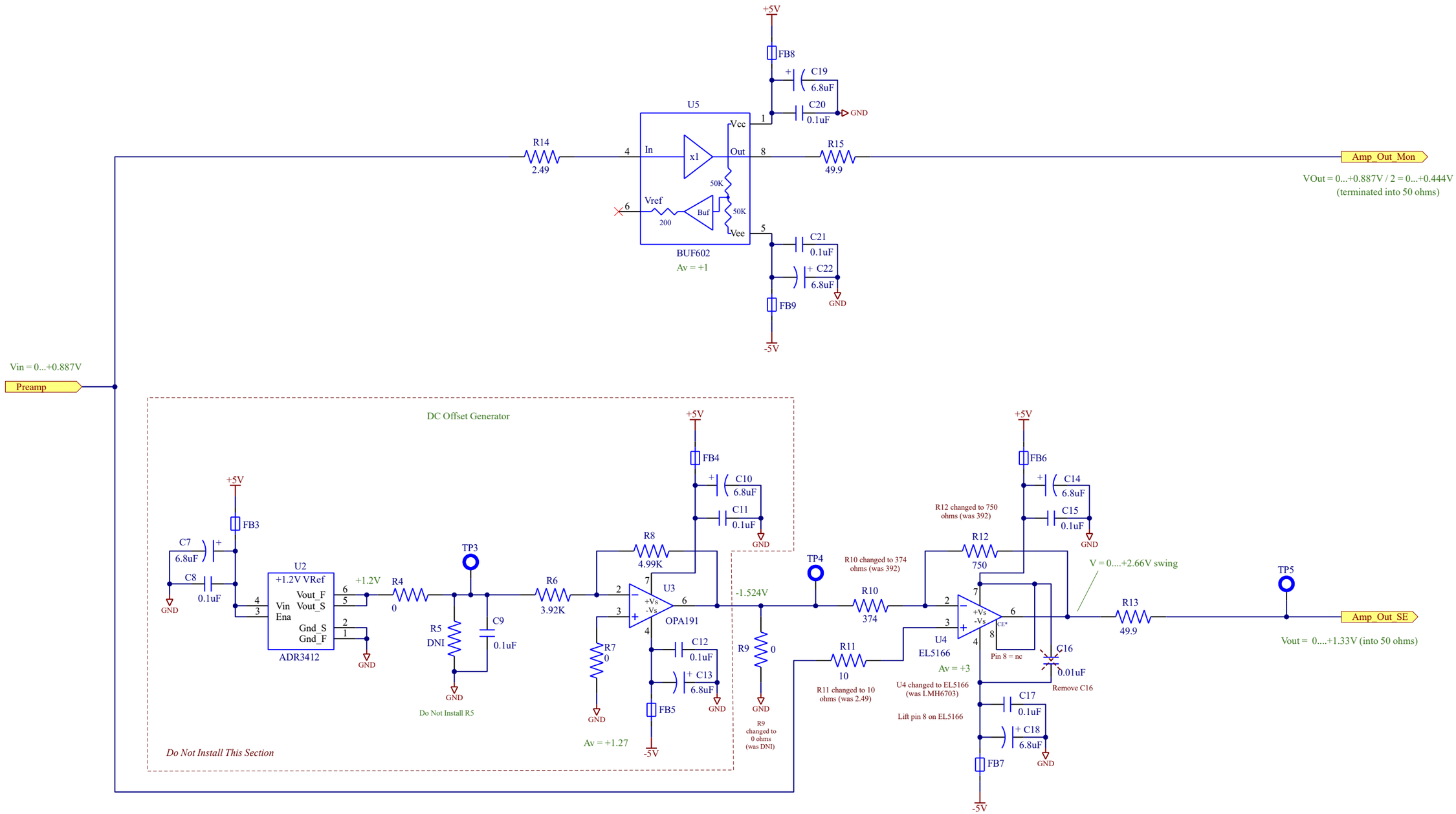

PIP-II IT Beam Pattern Generator

BPG Drive Amplifier -- Single-Ended Output Amplifier and Monitor

Fermilab

Operated by Fermi Research Alliance, LLC under Contract No. DE-AC02-07CH11359 with the United States Department of Energy.

Size	Rev		
B	A	BPG Drive Amp - SE Out	ENGINEER: J. E. Dusatko DRAWN: J. E. Dusatko CHECKED: D. Klepec APPROVED: *
Number *	Date: 9/16/2020 Time: 3:17:50 PM	Sheet 3 of 5	

Y:\Projects\LLRF\Systems\PIP2IT\Hardware\BPG\drive_amp\sch_pcb\bpg_drive_amp\bpg_DA_se

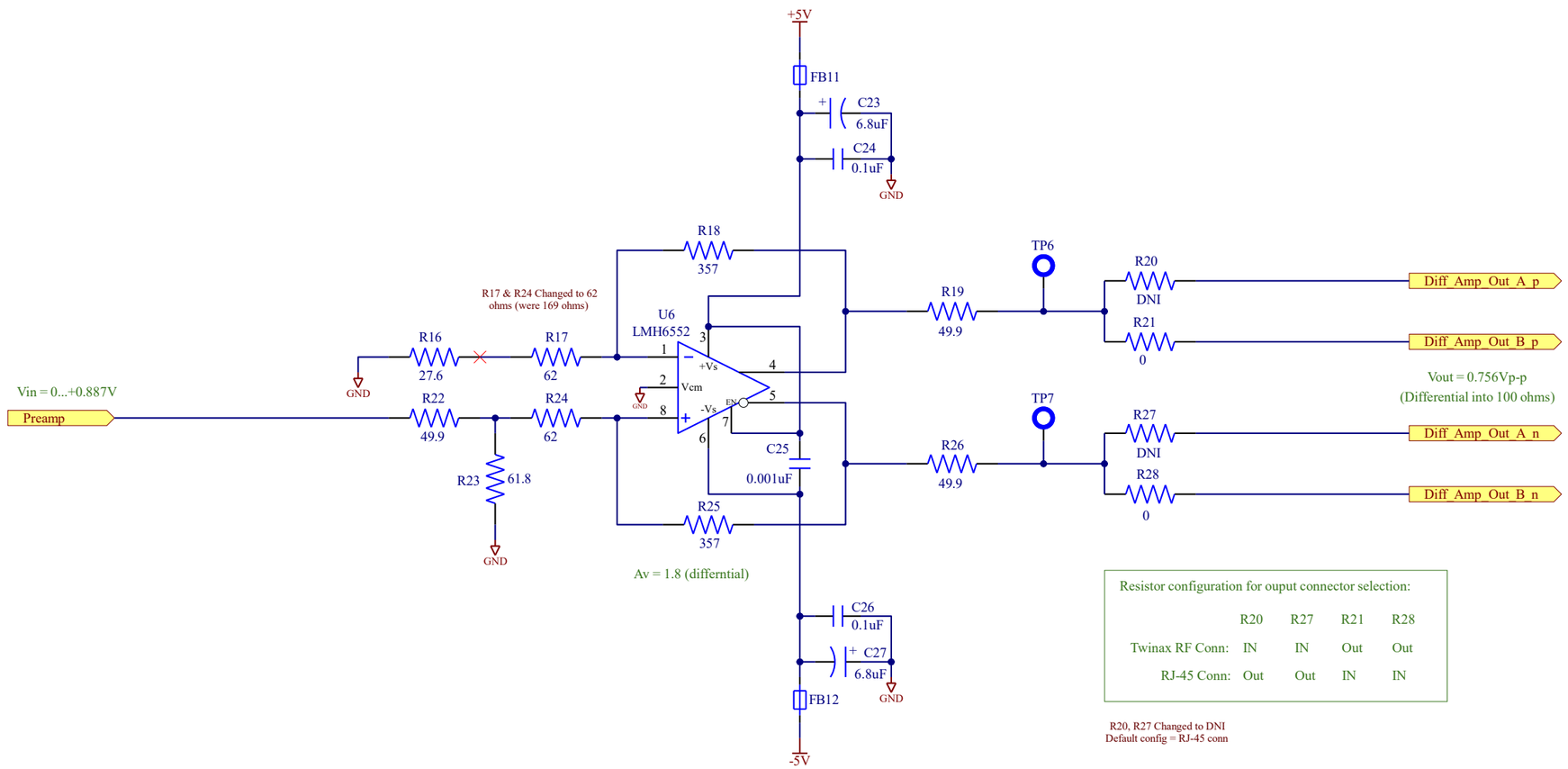

Resistor configuration for ouput connector selection:

	R20	R27	R21	R28
Twinax RF Conn:	IN	IN	Out	Out
RJ-45 Conn:	Out	Out	IN	IN

R20, R27 Changed to DNI
Default config = RJ-45 conn

PIP-II IT Beam Pattern Generator

BPG Drive Amplifier -- Differential Output Amplifier

Fermilab

Operated by Fermi Research Alliance, LLC under Contract No. DE-AC02-07CH11359 with the United States Department of Energy.

Size	Rev		
B	A	BPG Drv Amp - Diff Out	ENGINEER: J. E. Dusatko DRAWN: J. E. Dusatko CHECKED: D. Klepec APPROVED: *
Number *		Date: 9/16/2020 Time: 3:17:51 PM	Sheet 4 of 5

Y:\Projects\LLRF\Systems\PIP2IT\Hardware\BPG\drive_amp\sch_pcb\bpg_drive_amp\bpg_DA_dif

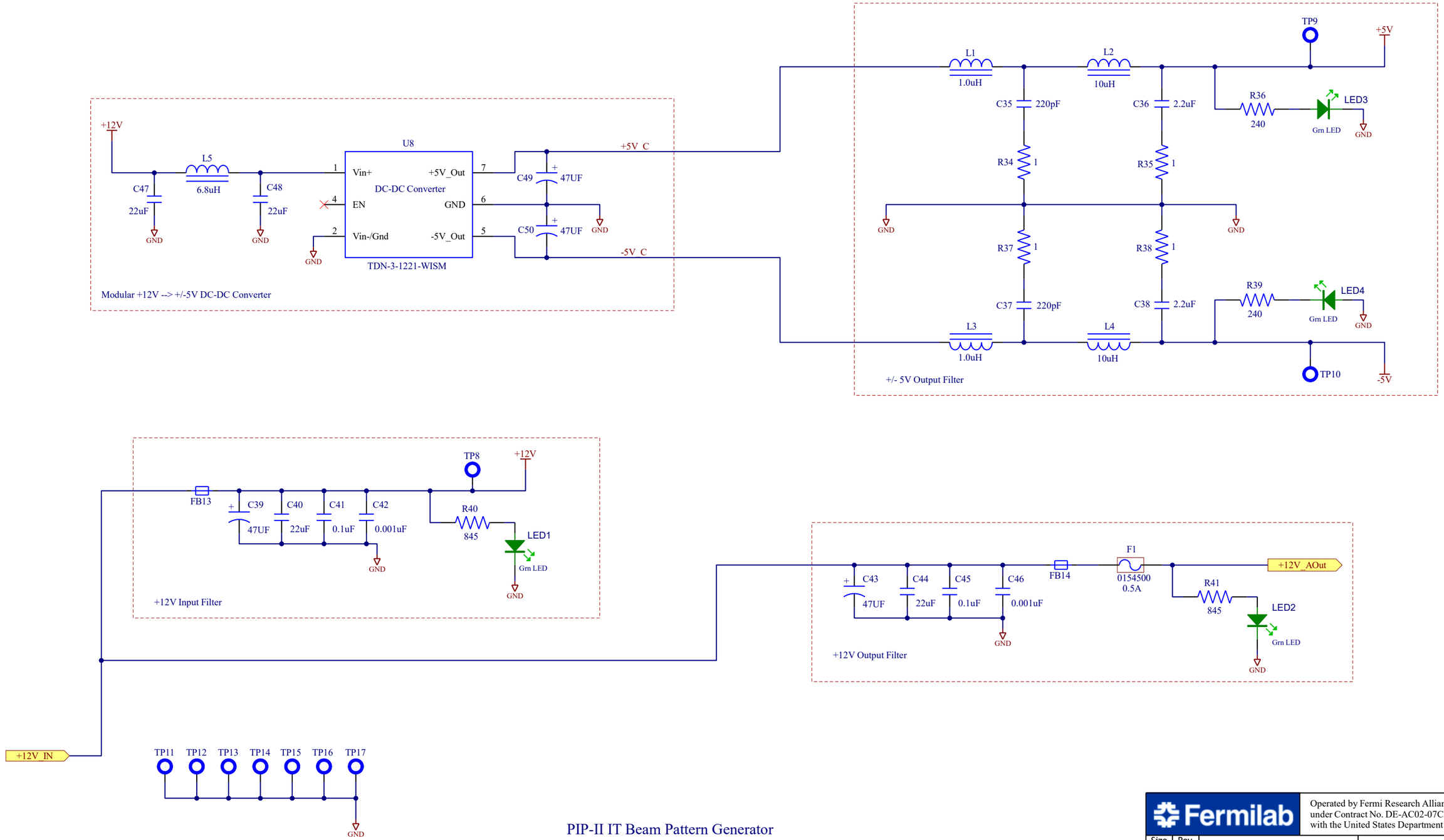

PIP-II IT Beam Pattern Generator

BPG Drive Amplifier -- Power Subsystem

Fermilab

Operated by Fermi Research Alliance, LLC under Contract No. DE-AC02-07CH11359 with the United States Department of Energy.

Size	Rev		
B	A	BPG Dev Amp - Power	ENGINEER: J. E. Dusatko DRAWN: J. E. Dusatko CHECKED: D. Klepec APPROVED: *
Number *	Date: 9/16/2020 Time: 3:17:51 PM	Sheet 5 of 5	

Y:\Projects\LLRF\Systems\PIP2IT\Hardware\BPG\drive_amp\sch_pcb\bpg_drive_amp\bpg_DA_Pow