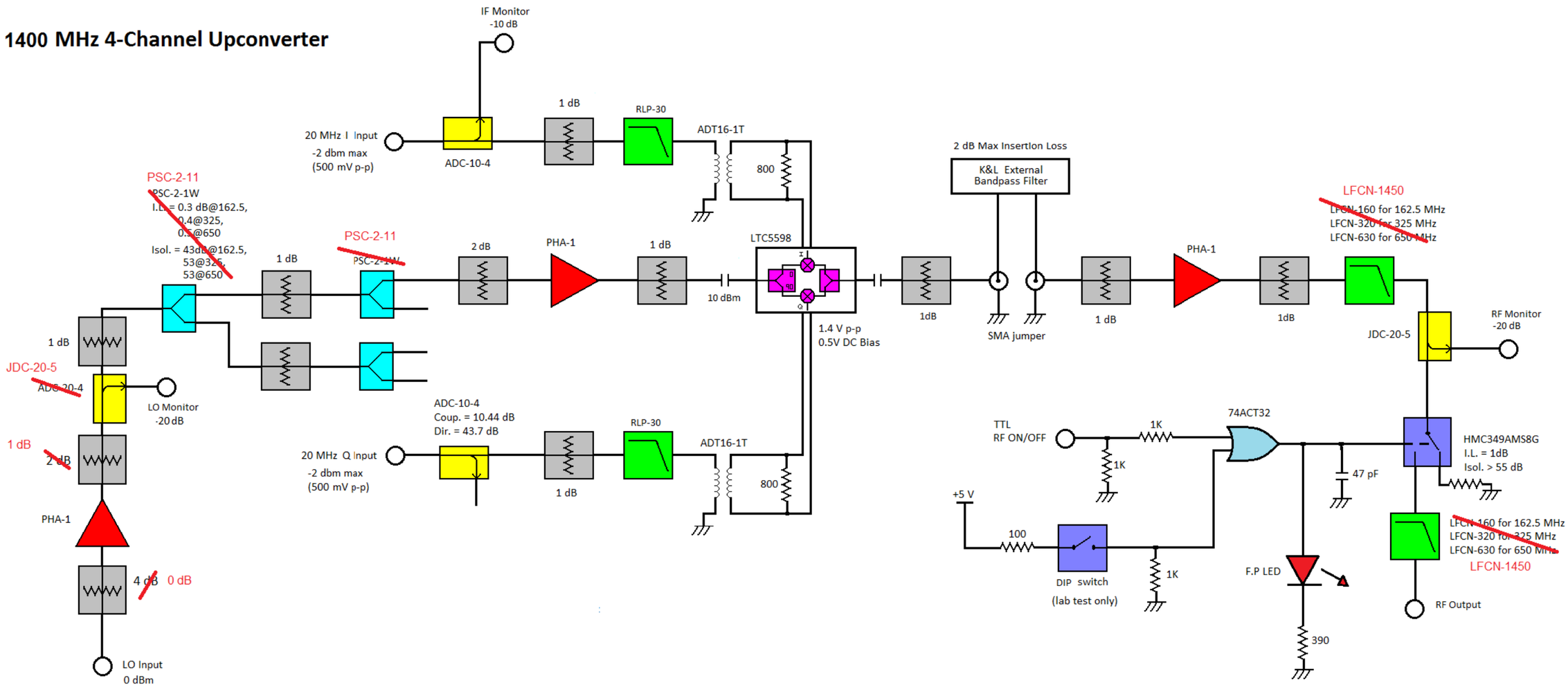1400 MHz 4-Channel Upconverter