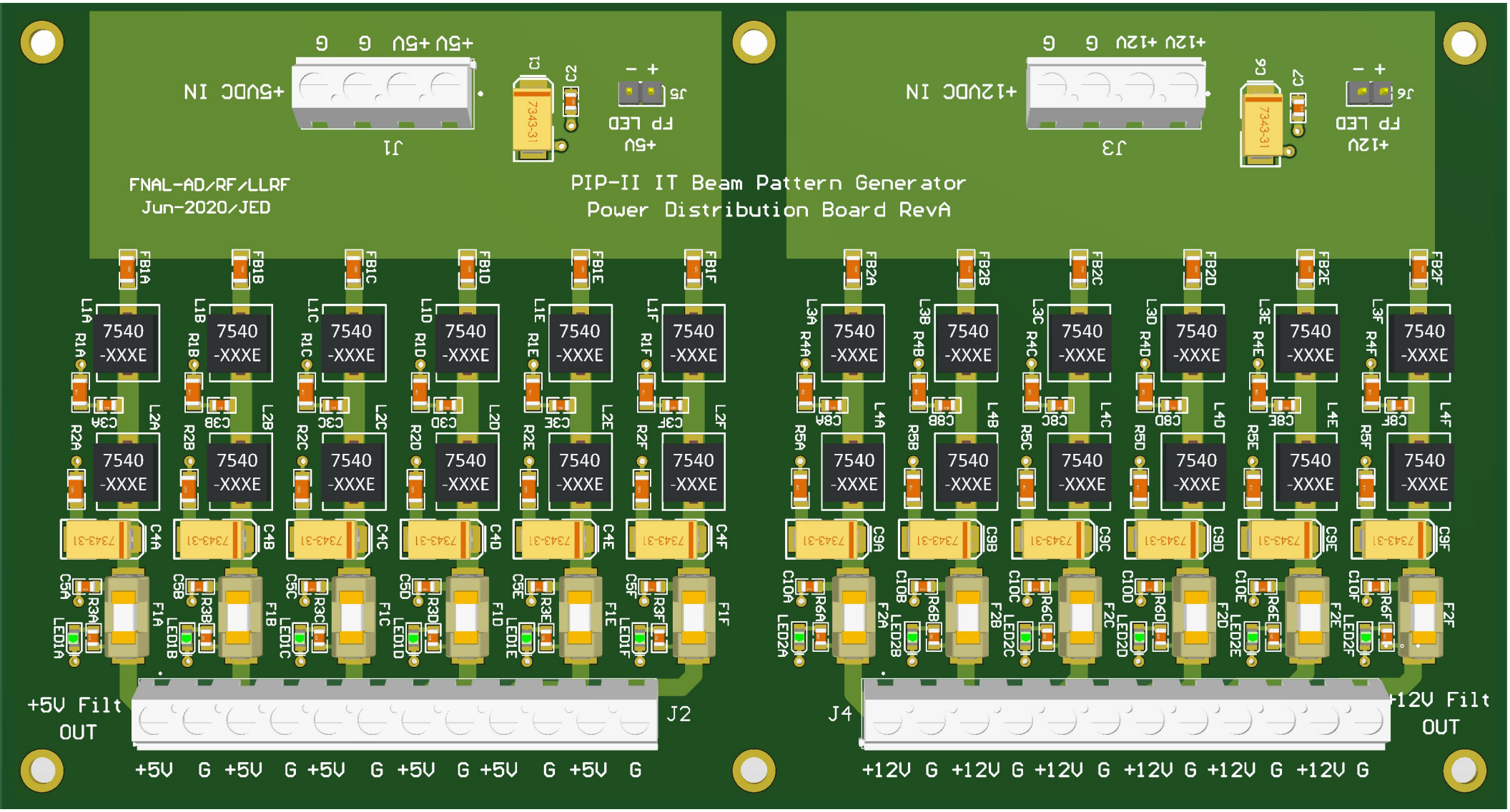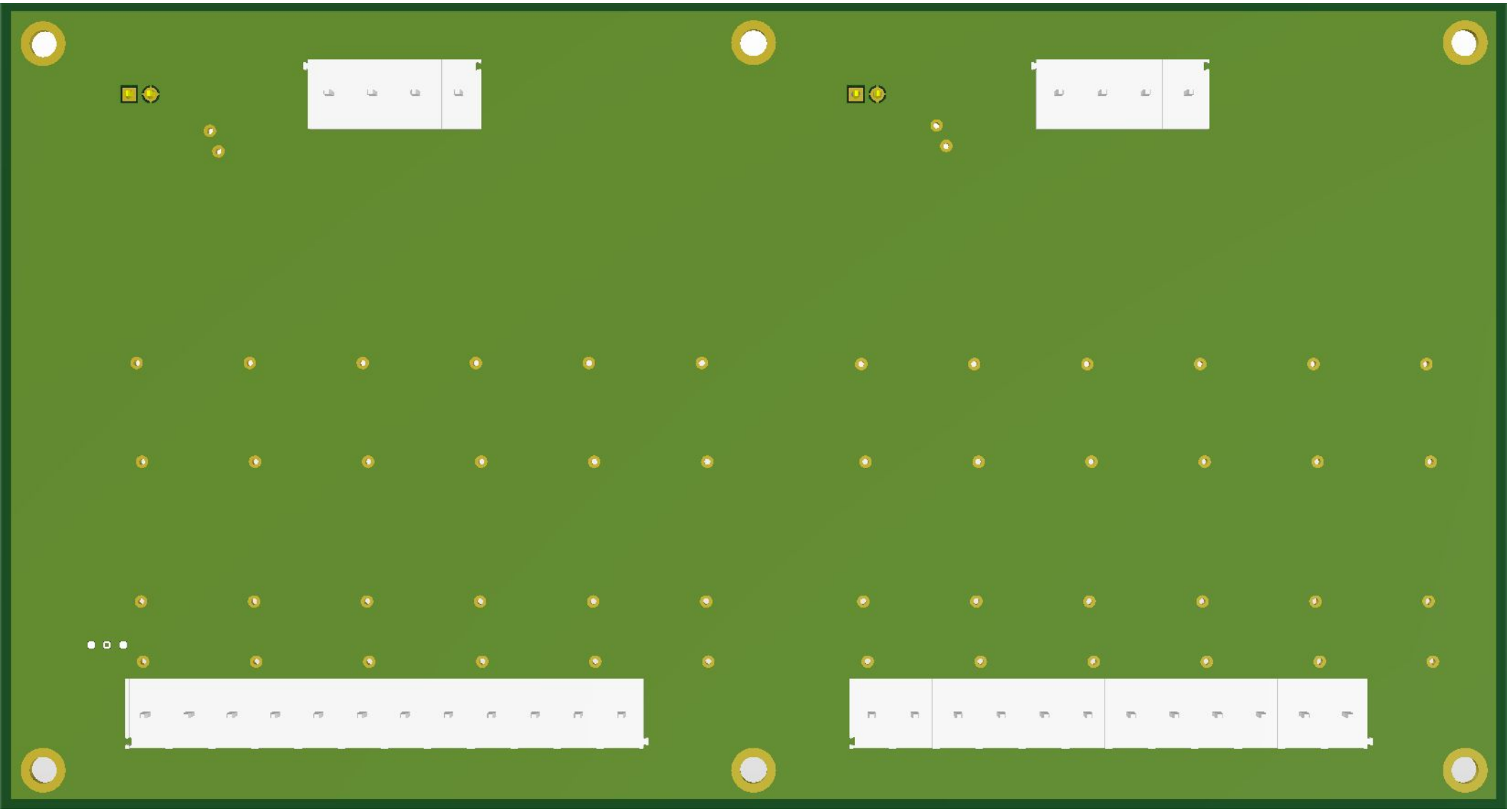
PIP-II IT Beam Pattern Generator
Power Distribution Board RevA
FNAL-AD/RF/LLRF
Jun-2020/JED
+5VDC IN
+5U +5U G G
J1
+5U
FP LED
J5
+12VDC IN
+12U +12U G G
J3
+12U
FP LED
J6
7540
-XXXE
7343-31
+5V Filt
OUT
J2
+5V G +5V G +5V G +5V G +5V G +5V G
J4
+12V Filt
OUT
+12V G +12V G +12V G +12V G +12V G +12V G