Fermilab

Managed by Fermi Research Alliance, LLC for the U.S. Department of Energy Office of Science

PIP-II Beam Transfers to Booster Interface

Brian Chase& LLRF Team

Oct. 31, 2019

Outline

- Physics Parameters for Transfers
- PIP-II to Booster Interface
- System Design
  - General system requirements
  - Synchronization to beam bunches
  - Fine timing resolution
- Arbitrary Waveform Generator (AWG)
- LabVIEW Application
  - Waveform Generation and Manipulation
  - User Interface
- Beam Capture

Physics Parameters for Transfers

- PIP-II PDR - Bucket to bucket transfers between the Linac and Booster, RF frequencies are not harmonically related.
- RFQ frequency - 162.5 MHz
- Booster frequency at .8 GeV kinetic - 46.46 MHz
- Linac beam injection limited by RF power - 2mA for 0.55ms
- For 5 mA from RFQ 60% of beam is chopped out in the MEBT
- The parameters of transfer matching
  - Frequency, phase, B-field, beam energy, radius

PIP2IT RF Station Diagram

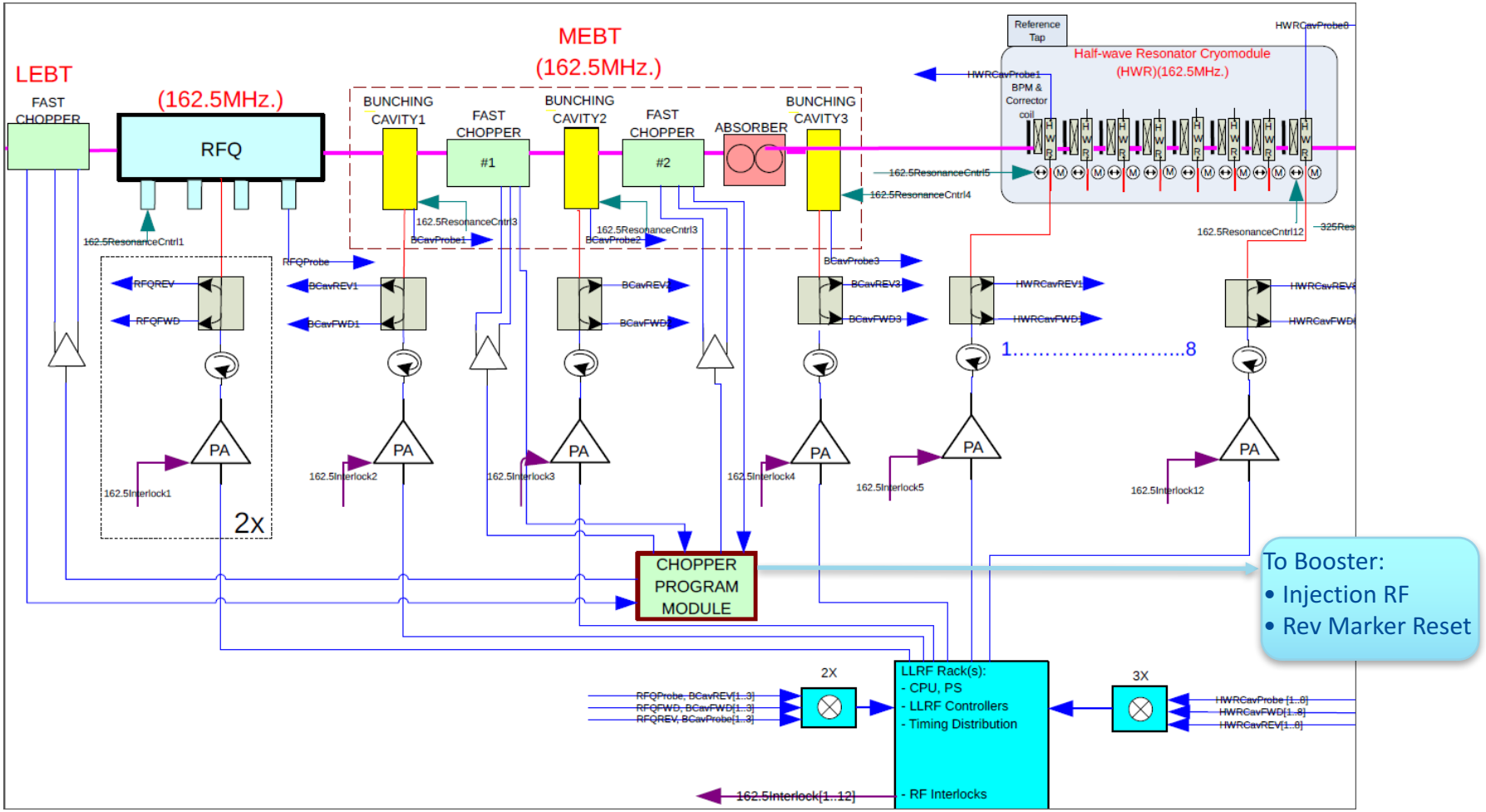

The Beam Pattern Generator uses AWG to control 200Ω Kickers and to provide RF reference and a marker reset to the Booster

PIP-II to Booster Interface

- Linac Provides:
  - 44.46 MHz RF to Booster(adjustable)
    - Pre-injection RF to lock up, during injection and post injection
  - Revolution marker reset at the start of injection
  - Beam selected to hit proper phase of Booster RF buckets
- Booster process
  - Prepare for lock
    - RF on at low amplitude
    - Lock at RF sync on (30 kHz BW)
    - Reset revolution marker with Linac Marker Reset
    - Detect injection errors and feedback to
    - Adiabatically raise RF amplitude after injection
    - Release PLL and go to beam based feedback

Transfer Process Control Parameters (proposed)

- Booster injection frequency
  - This can be a single knob or a frequency trajectory could be defined
    - Changes will require re-calculations
- Booster injection phase
  - This could be done in the Booster
- Beam pattern
  - Probably just provided but there could be transactions if needed
- Linac beam energy
  - This should stay in Linac control but could be a knob if needed

System Requirements

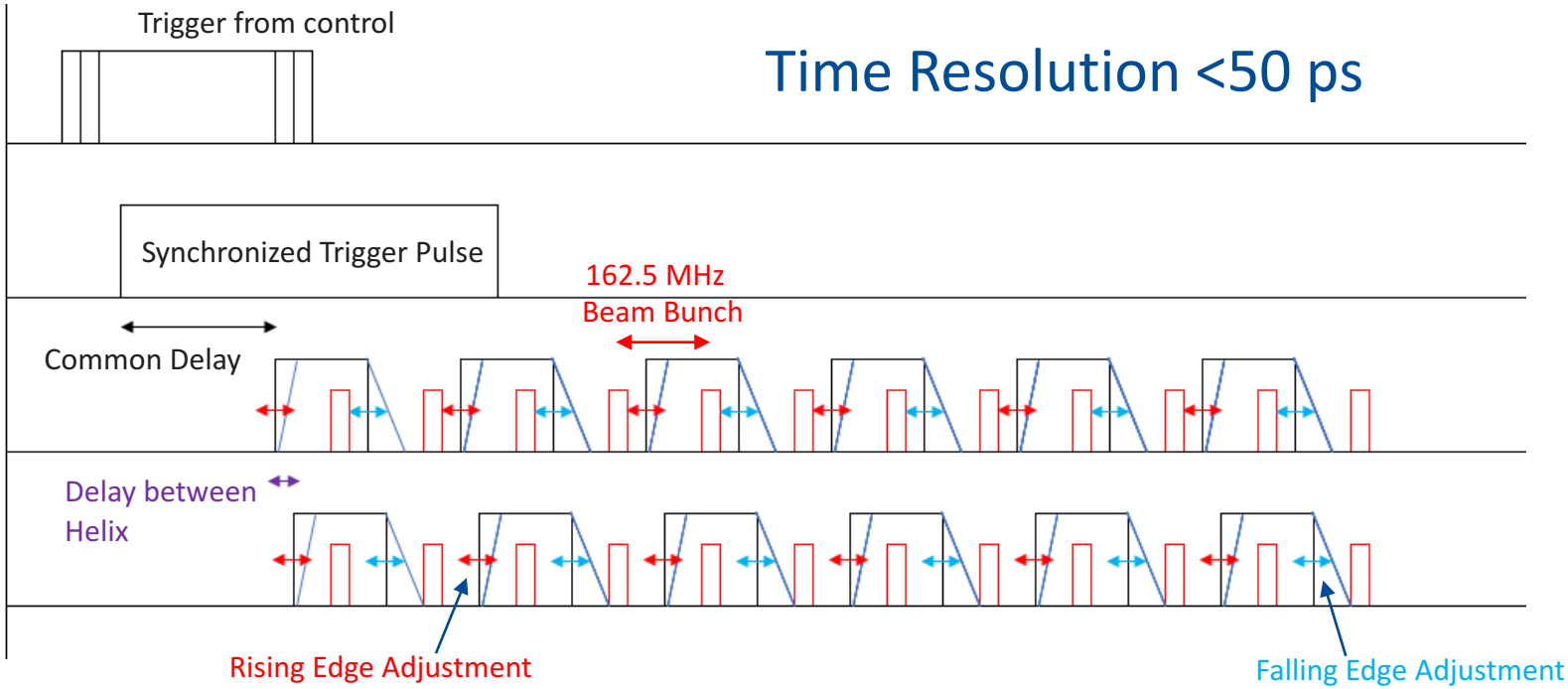

- Delay with respect to synchronized trigger
  - Compensate for cable lengths
  - Compensate for kicker driver delay
  - Internal delay of Arbitrary Waveform Generator (AWG)
- Differential delay
  - Different characteristics of kicker switches

Chopper System Implementation

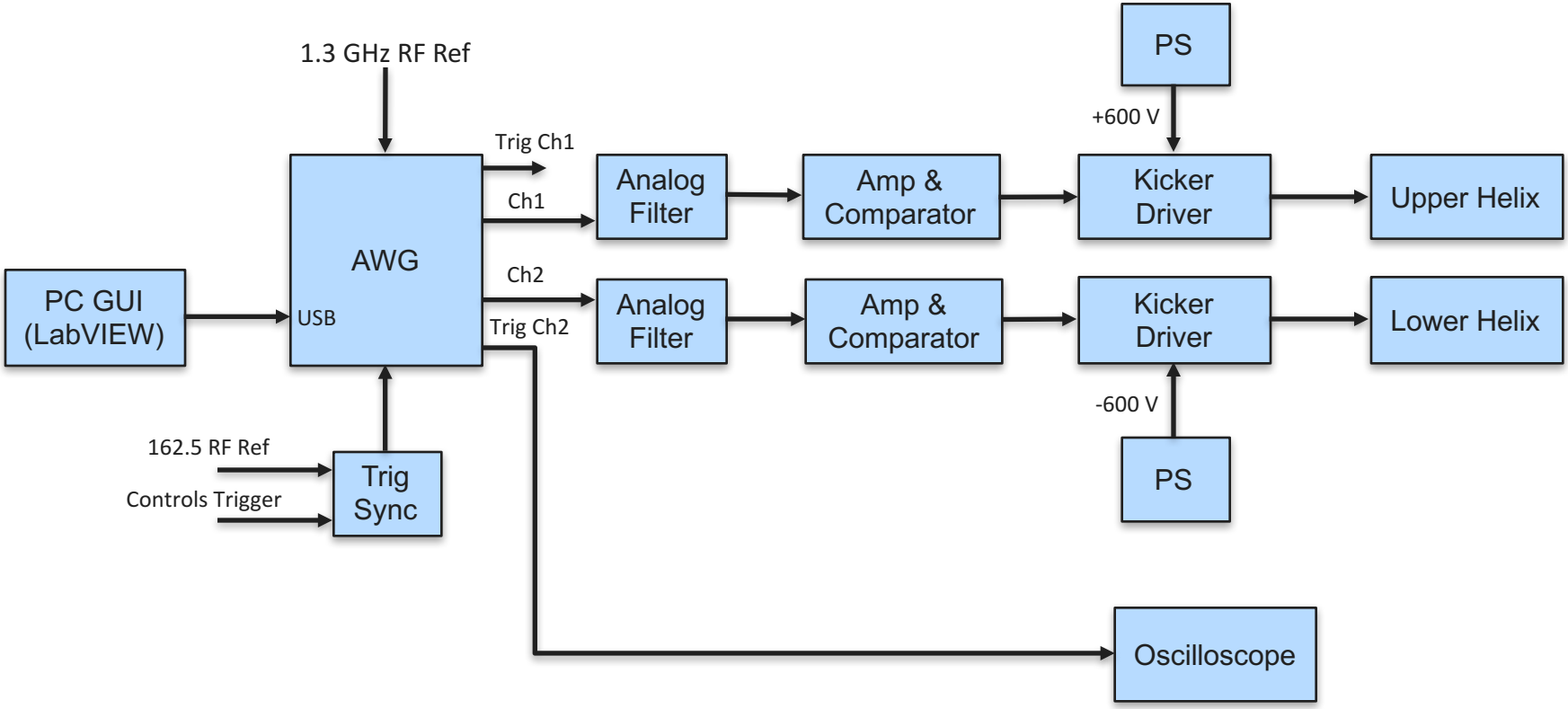

Chopper Waveform Generation

- Arbitrary Waveform Generator
  - Generates waveform for both helix structures
  - May contain more than one pattern
  - Synchronized to Beam/RF reference (1.3 GHz)
  - Trigger for oscilloscope
  - Up to ~4ms of beam chopping waveform

- Trigger Synchronization
  - Synchronization of control trigger pulse to 162.5 MHz beam reference

- LabVIEW Application
  - Generates beam pulse patterns for AWG running at 1.3 GHz
  - 38 ps time resolution
    - Delay on both the channels with respect to synchronized trigger
    - Relative delay between the two chopper waveforms
    - Independently adjusting rising and falling edges for each pulse
  - Inversion of the arbitrary waveforms for optical driver in 200Ω system

AWG Program Functional Diagram

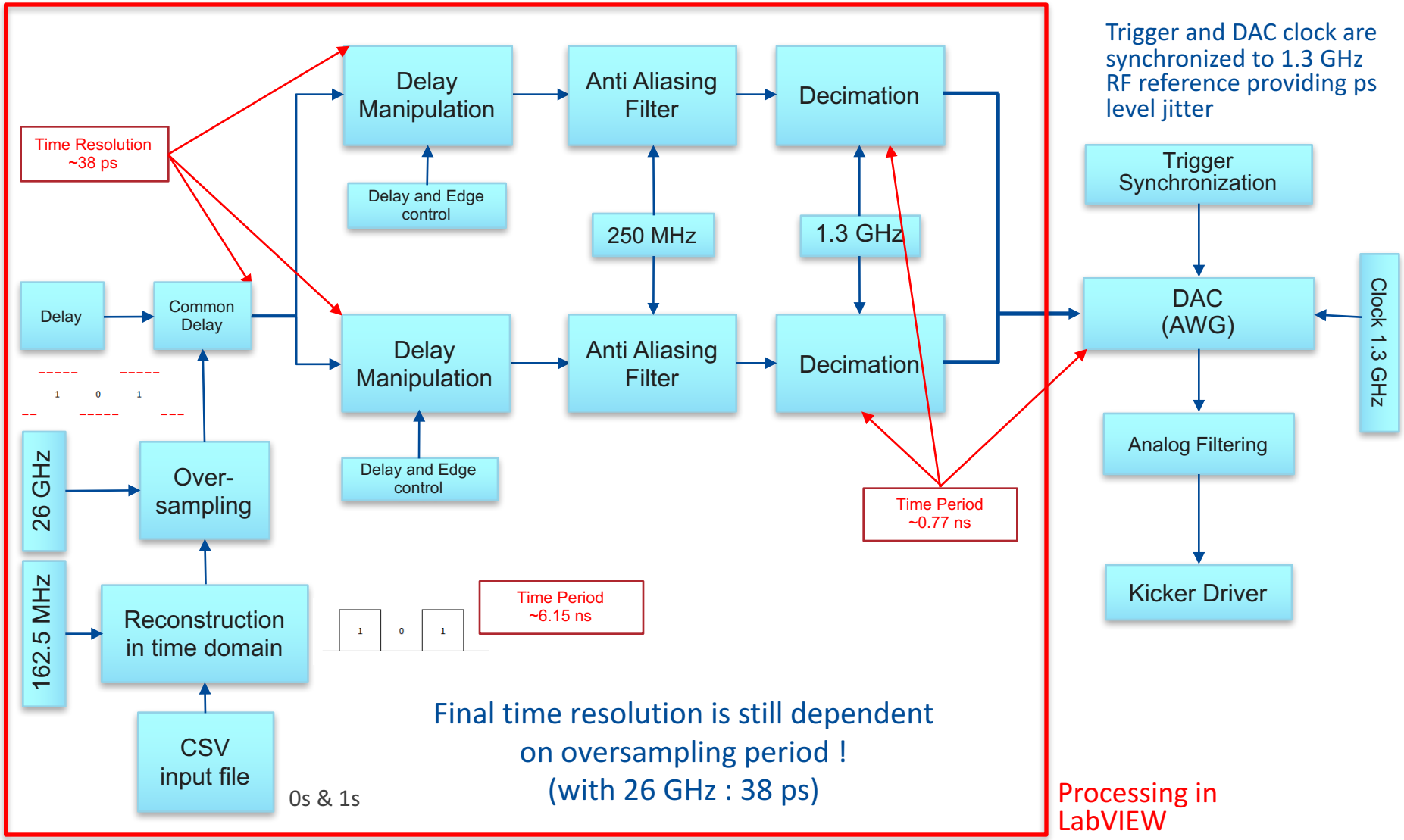

Signal theory and approach to fine time resolution (38 ps)

- Nyquist Bandwidth of the beam pattern is 81.25 MHz
- For a time resolution of <50 ps signal is oversampled at 26 GHz
- Resulting Nyquist Bandwidth is 13 GHz
- Signal manipulation can be done at a resolution of 36 ps (1/26GHz)
- The AWG is running at 1.3 GHz clock. The Nyquist Bandwidth of the signal should be < 650 MHz
- An anti aliasing filter at 250 MHz is used to eliminate higher frequencies.
- An analog anti aliasing filter reconstructs the waveform while limiting the bandwidth to 350 MHz

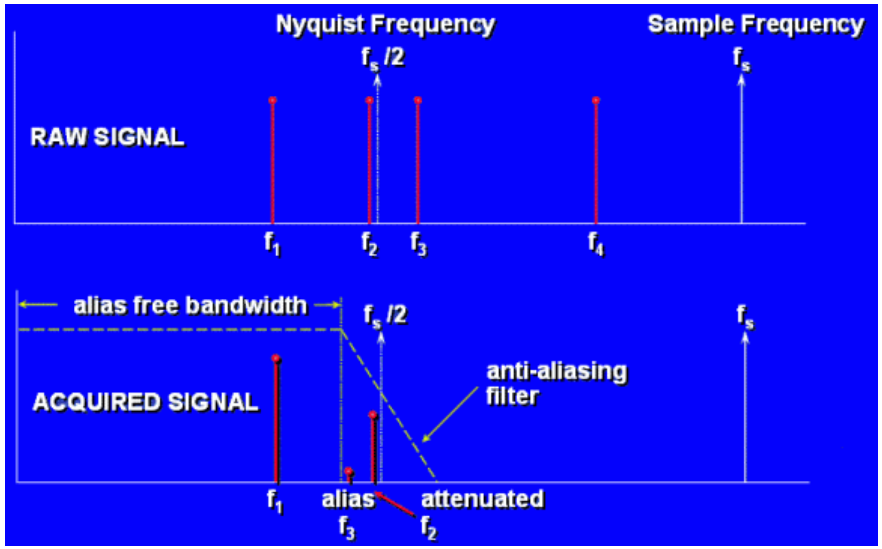

Frequency Aliasing

Arbitrary Waveform Generator

Model: WavePond DAx22000 with custom 1.3 GHz external clock input

WavePond® is a division of Chase Scientific

Specification of AWG:

- 2 Channels, 2.5 GSPS/ch
- 12-Bit D/A resolution
- 750 mVp-p 50Ω DC coupled outputs
- 8 MS/Ch memory size
- SFDR better than -50 dBc @ 825 MHz
- Full scale T_{rise}/T_{fall} = 120 ps (typ)
- 1.3 GHz external 50Ω clock input
- 2 Channels 3.3 V 50Ω TTL marker outputs
- All functions controlled through USB Mini-B connector

Trigger Synchronization

- Trigger signal from controls is not synchronized to Beam Bunches from the RFQ
- Trigger signal is synchronized to 162.5 MHz RF in the RFQ
- AWG's trigger input is 50Ω DC coupled biased at 0.9V

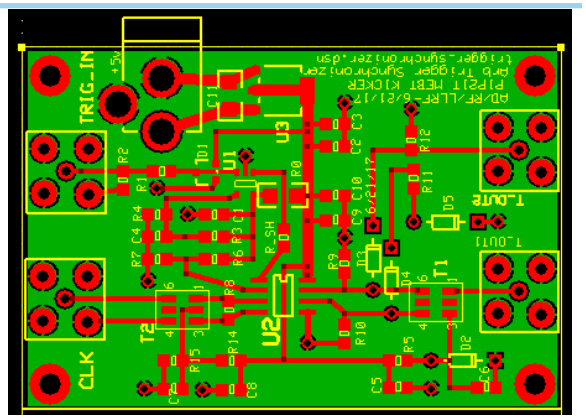

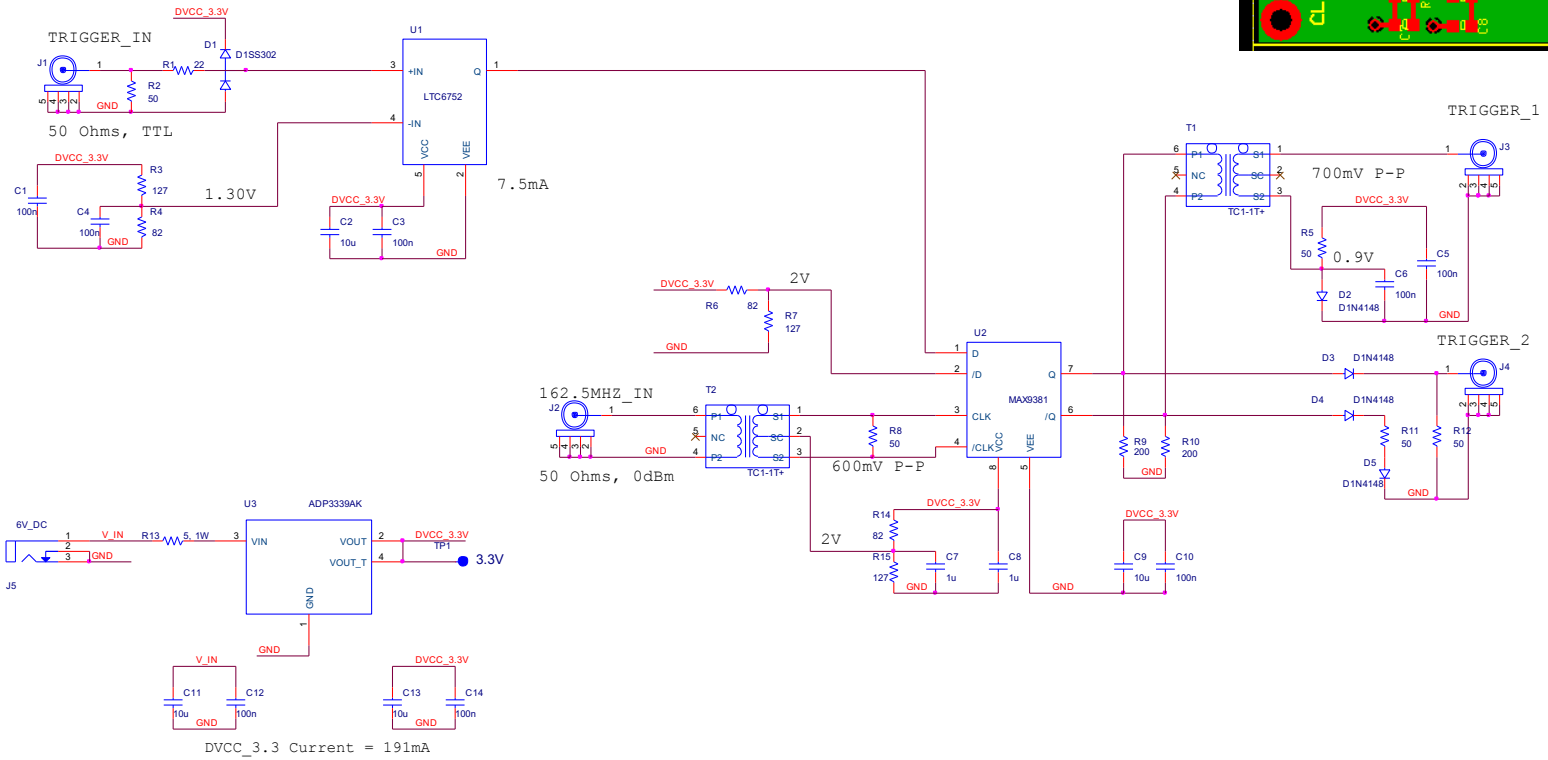

LabVIEW User Interface: Input File Pattern

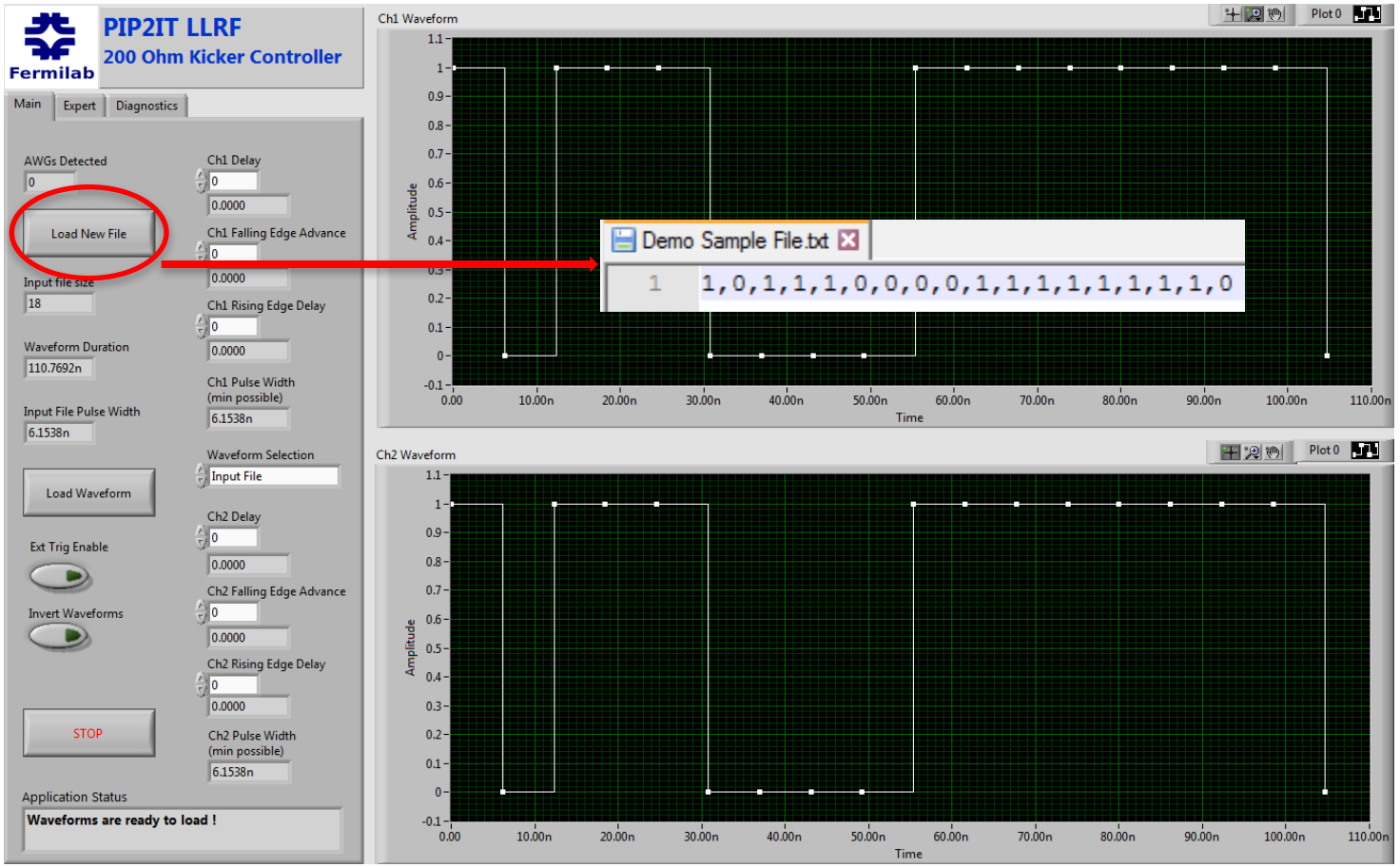

- Desired bunch selection pattern is uploaded via CSV format input text file
  - "0" represents the beam bunch allowed to pass through
  - "1" represents the beam bunch to be kicked out
  - Each element is at a period of 6.15 ns (1/162.5 MHz)

LabVIEW User Interface: Oversampling

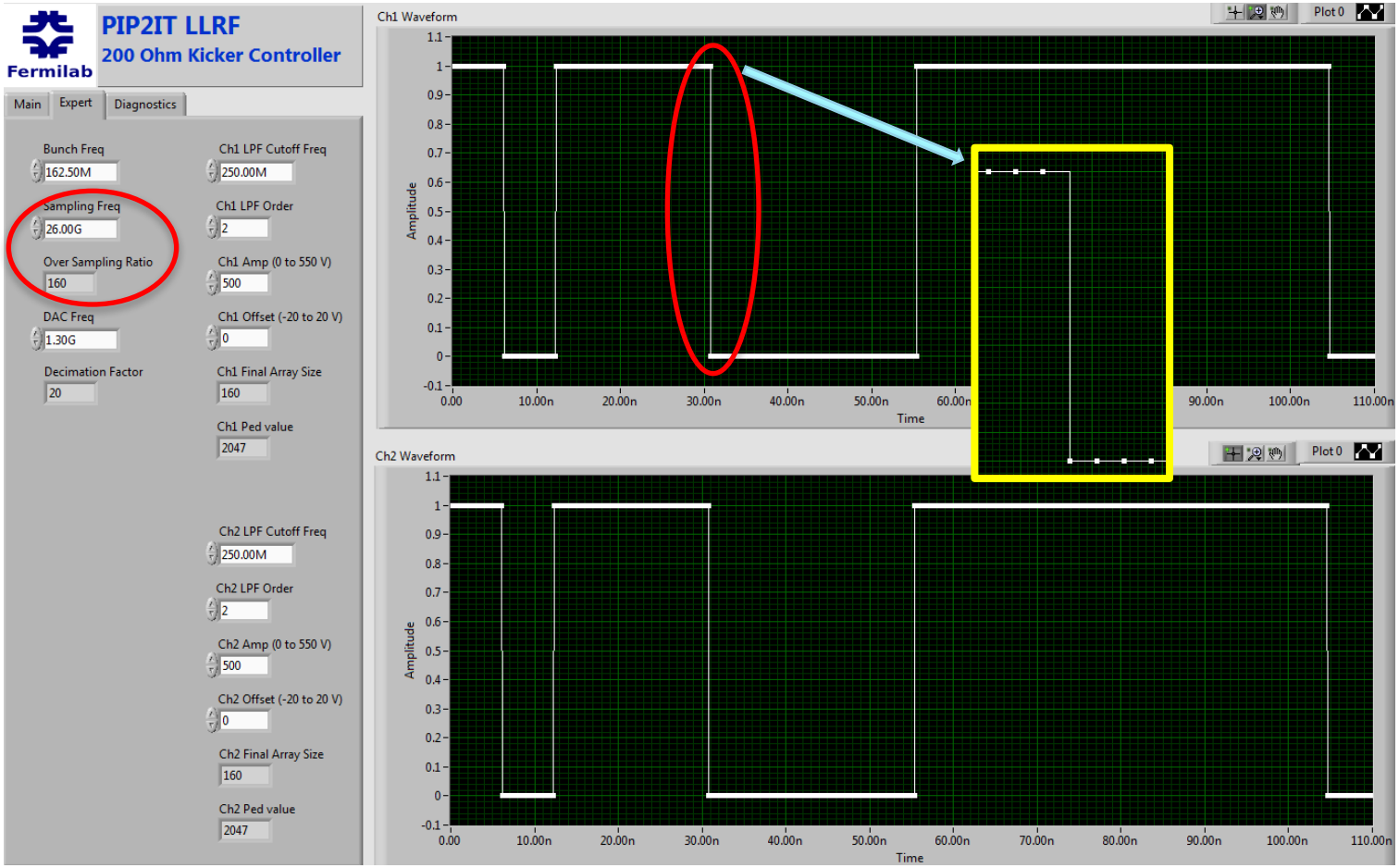

- Each value is oversampled at 26 GHz (38 ps)
  - Allows to adjust delays, rising and falling edges within 38 ps

LabVIEW User Interface: Independent Delay Adjustment

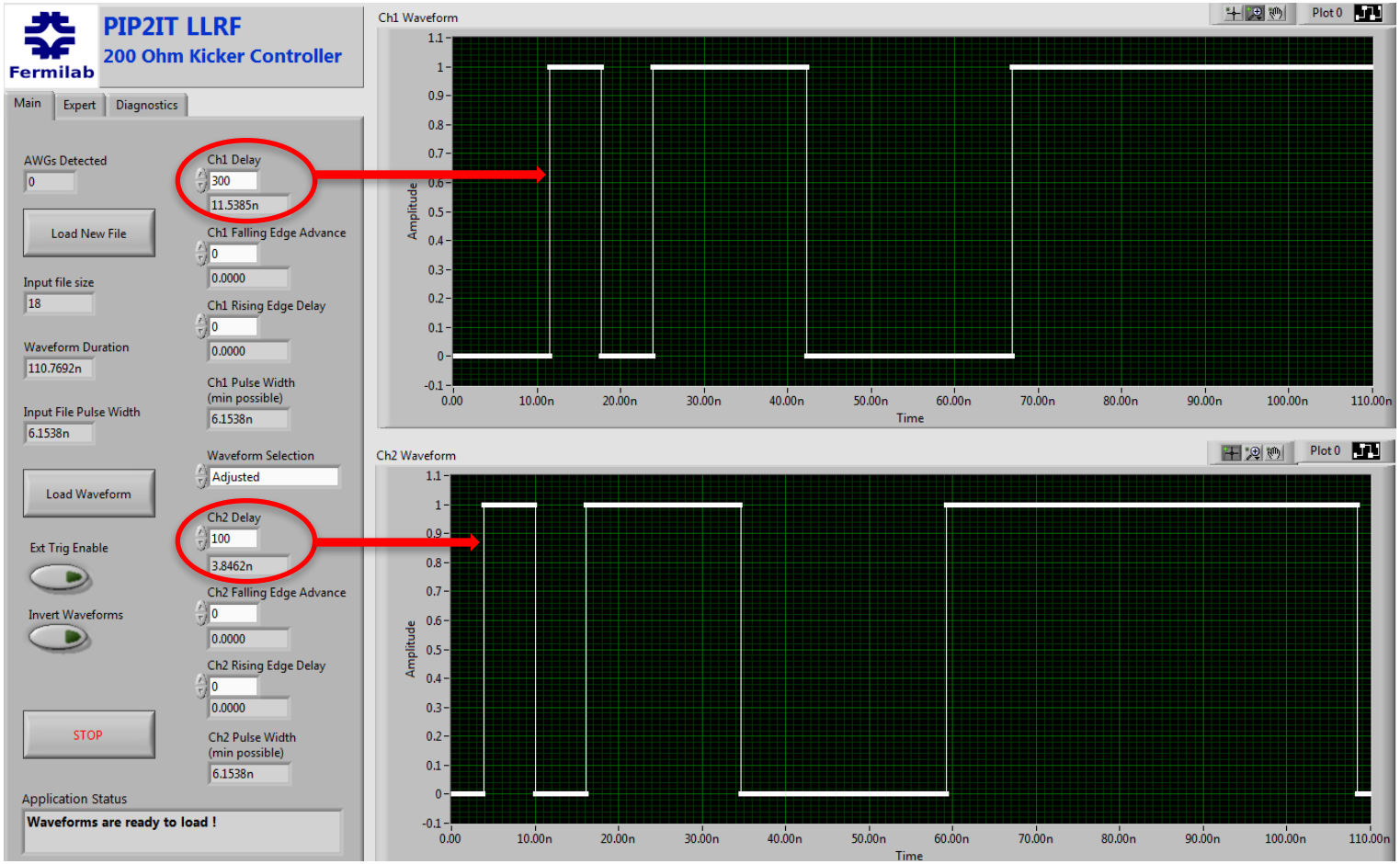

- Independent Ch1 and Ch2 delay adjustments
  - Time Resolution 38 ps

LabVIEW User Interface: Edges Adjustment

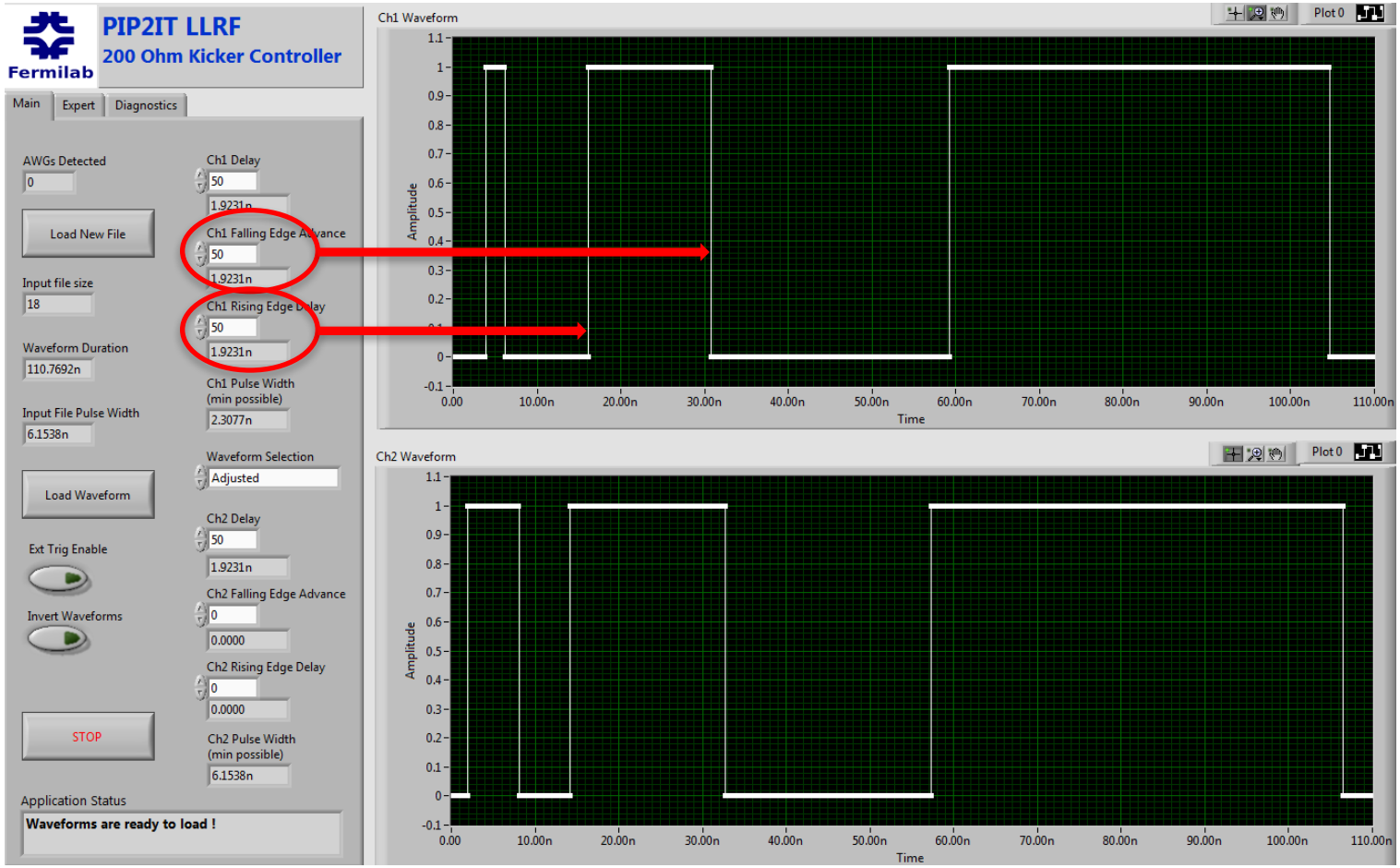

- Independent Rising and Falling edge delay/advance adjustments for each pulse
  - Time Resolution 38 ps

LabVIEW User Interface: Anti Alias Filtering

- Filtering parameters adjustments
  - Low Pass Filter
  - Cutoff Frequency
  - Order

LabVIEW User Interface: Decimated @ 1.3 GHz

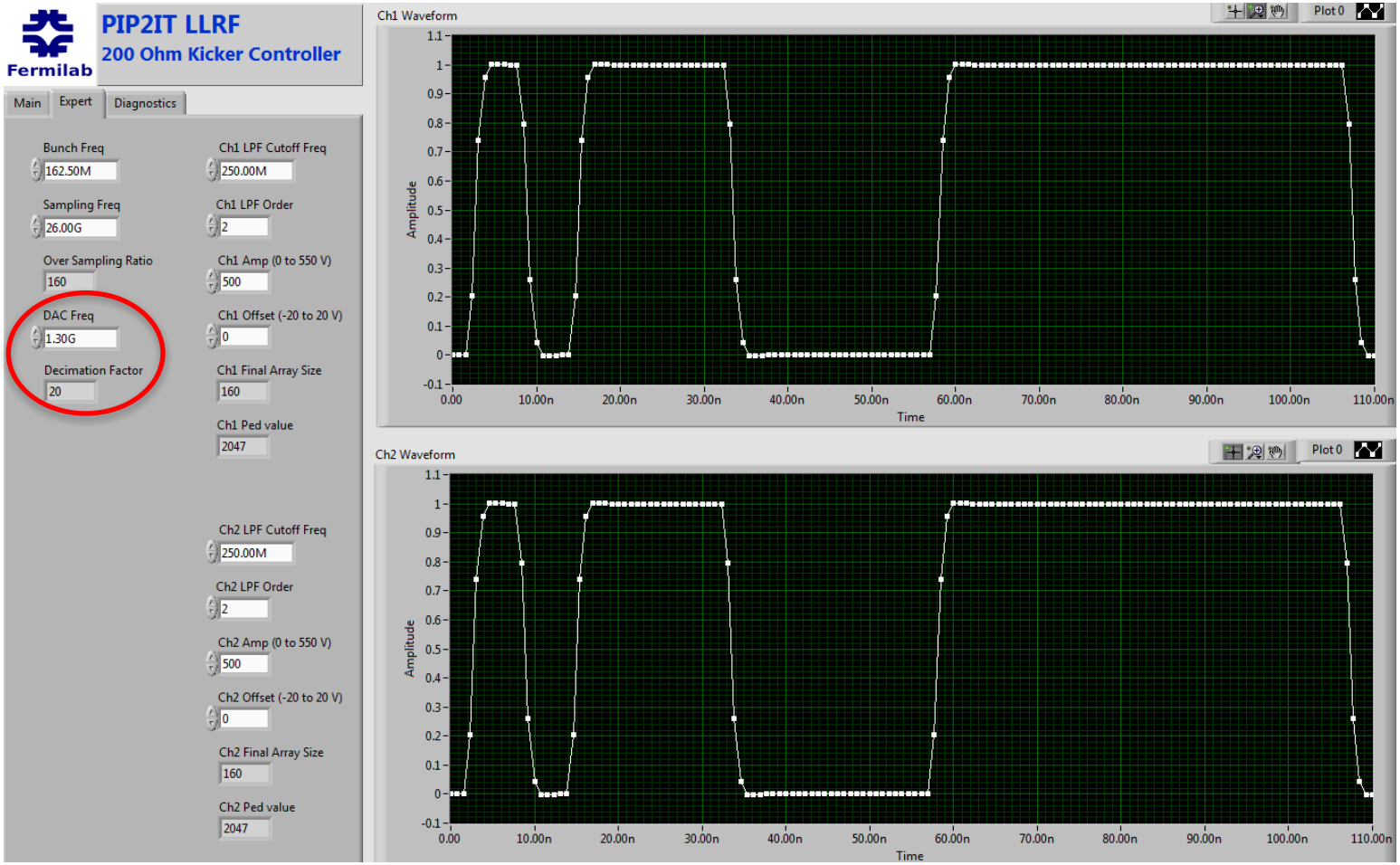

- Filtered waveform is decimated at 1.3 GHz (0.77 ns)
  - AWG clock is 1.3 GHz
  - Still the Time Resolution 38 ps !

LabVIEW User Interface: AWG download waveform

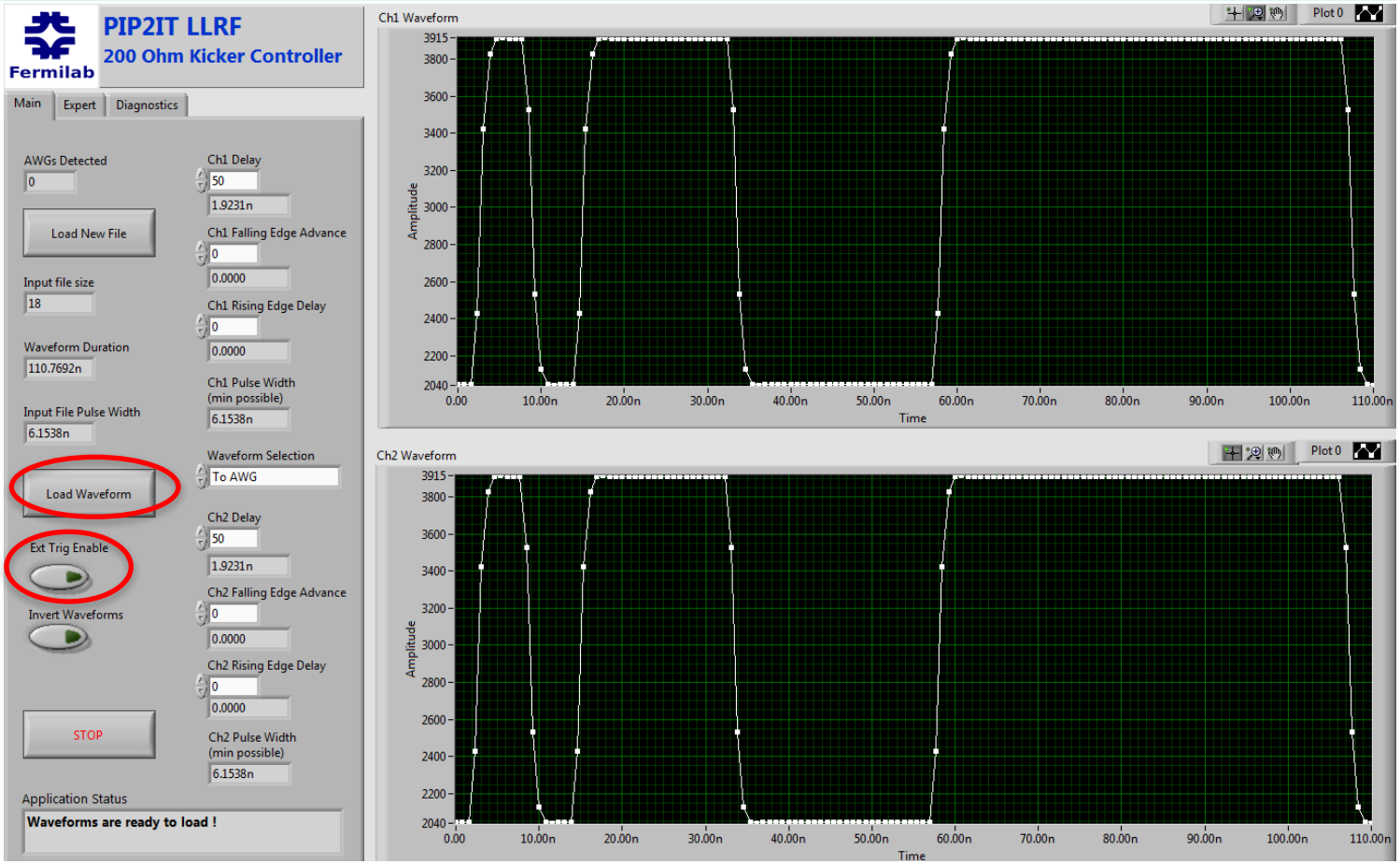

- Decimated data is converted to AWG acceptable values and loaded
  - AWG starts playing the waveform when “Ext Trig Enable” is pressed

Injection and Capture

- The present 400 MeV injects beam for approximately 40 microseconds into zero RF volts in Booster where it decoherers and coasts until it is adiabatically captured with 800kV RF. The beam momentum is defined by the Linac and the beam radial position is a function of this momentum and the B-field in the machine according to the equation:
  - dR/R = 1/gt^2 dB/B or dR/R = 0.0337 * dB/B
- The PIP-II era injection has many fundamental differences from present operations that must be understood in both the details of implementation but also in the ramifications that will affect day to operations and tune-up. The big changes are going from 400 to 800 MeV kinetic and the switch to bucket to bucket transfers with the latter raising many new issues. Now with the frequency held fixed:
  - dr/R = 1/(g^2-gt^2) * dB/B or at injection dR/R = 0.0381 * dB/B

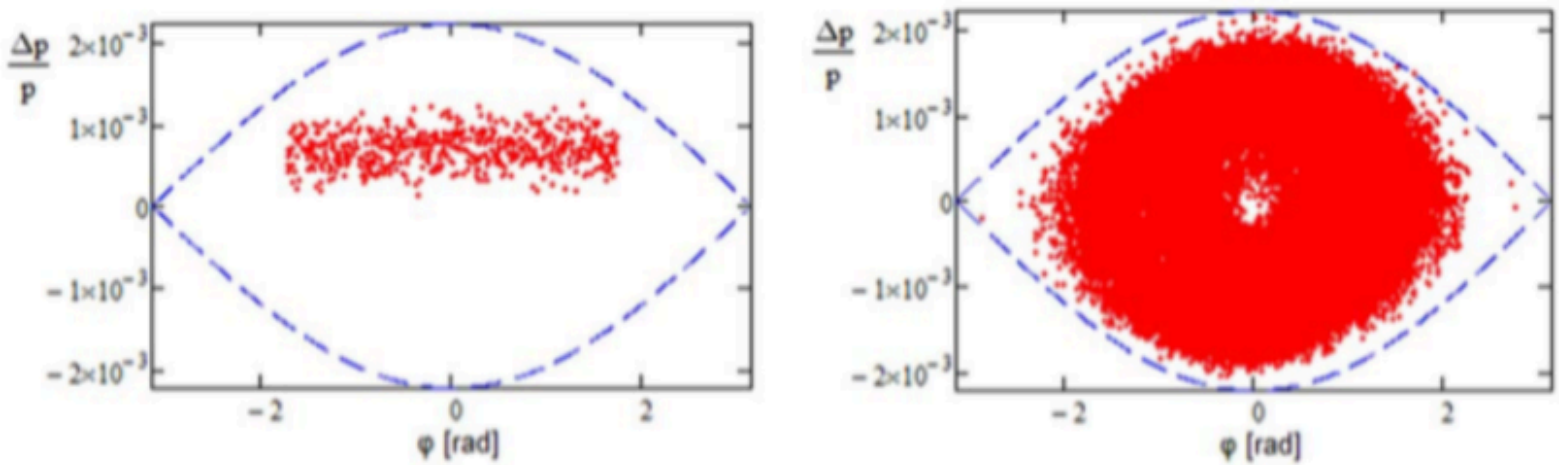

Figure 2.50: The longitudinal phase space of particles incoming to the Booster (left) and the phase space at the end of injection process (right).

Figure 1: Reproduction of Figure 2.50 from the CDR.

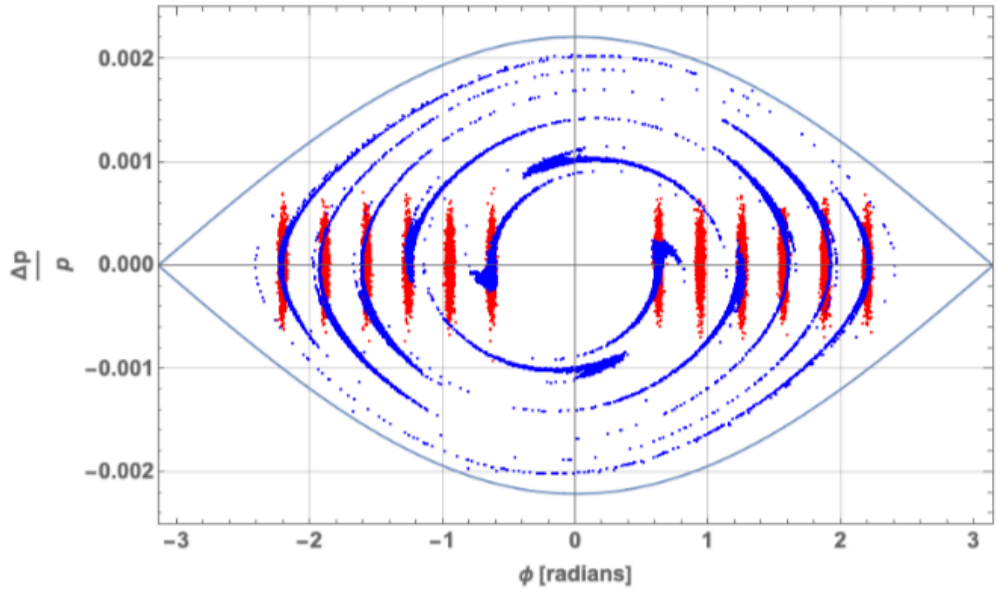

Figure 2: Proposed overlap area for beam injection. The red dots are representative of beam in the incoming Linac buckets, the green dots are after 292 turns. Linac bucket centroids are are chosen to be in the range $\{-0.7\pi, -0.15\pi\}$ or $\{0.15\pi, 0.7\pi\}$

Momentum Jitter (10^{-4})	On Momentum Scheme (10^{-3})	CDR Scheme (10^{-3})
0	0	0.1
0.5	0	0.16
1	0	0.52
1.1	0	0.6
1.2	0.02	1.3
1.5	0.039	2.1
2	0.099	4.2
2.5	2.3	24

Table 1: Beam loss fraction (in units of 10^{-3}) for the two schemes as a function of the momentum jitter between the Linac and Booster.

Simulations by Paul Derwent

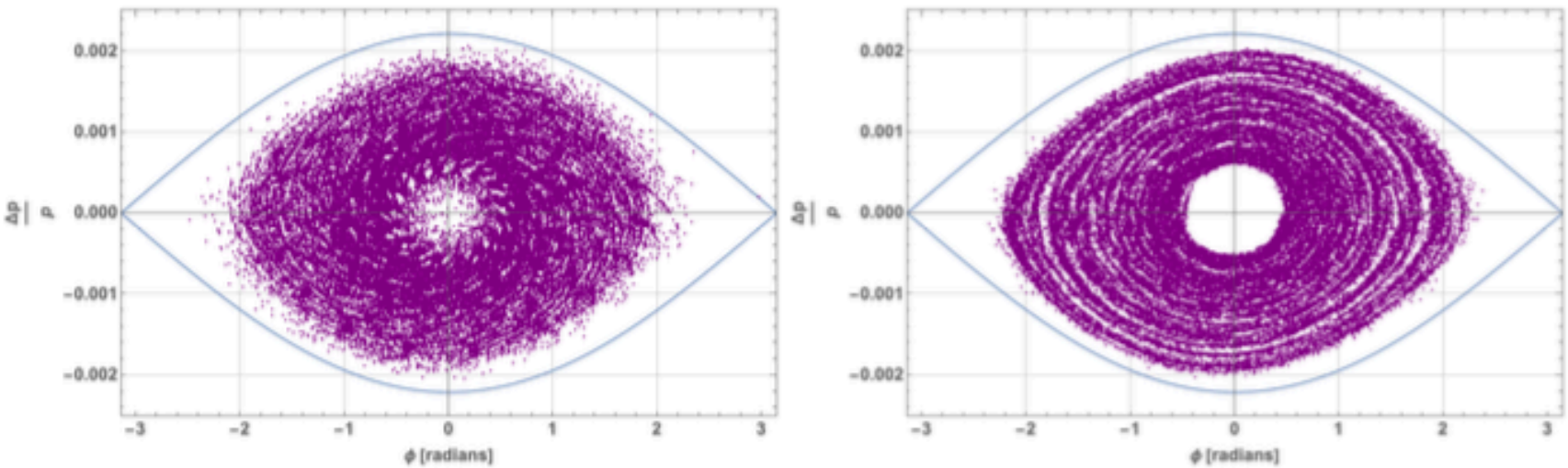

(a) CDR Scheme (b) On Momentum Scheme

Figure 3: Comparison of the phase space distribution at the end of injection. On the left, the CDR scheme with 7×10^{-4} offset. On the right, the on momentum scheme.

Simulations by Paul Derwent

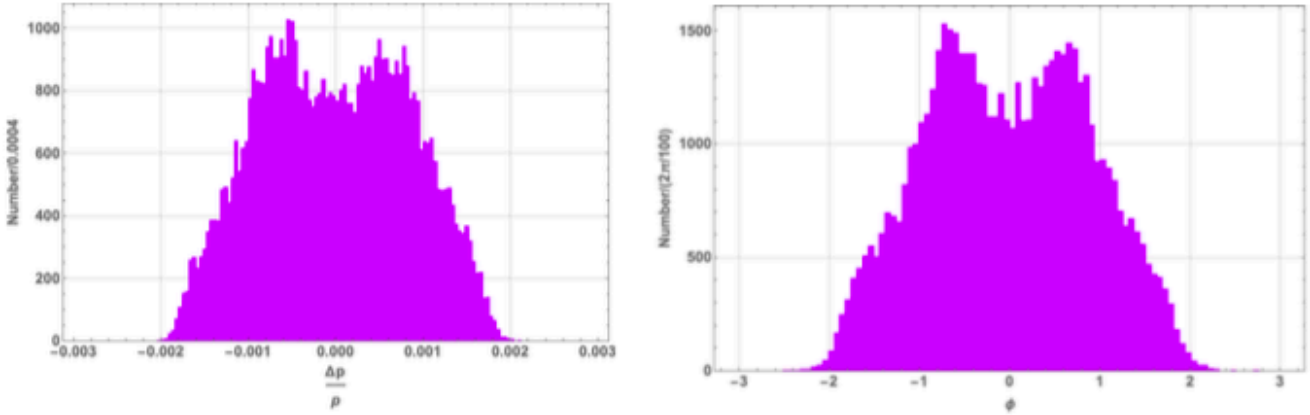

(a) $\frac{\Delta p}{p}$ distribution (b) ϕ distribution

Figure 4: Histograms of the 1 dimensional phase space distribution at the end of injection for the CDR scheme. On the left, $\frac{\Delta p}{p}$. On the right, ϕ.

On Momentum Booster Injection Scheme for PIP-II PIP-II docdb # 4023

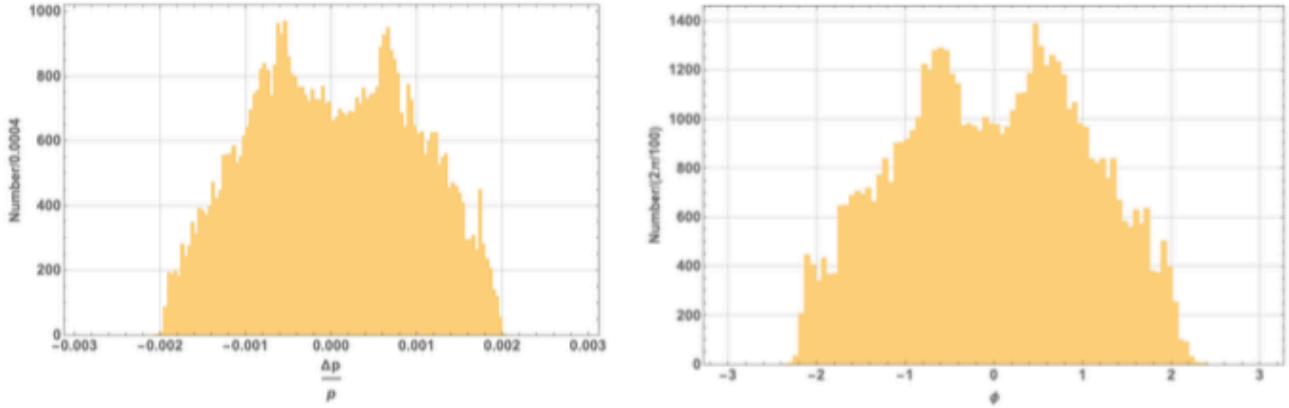

(a) $\frac{\Delta p}{p}$ distribution (b) ϕ distribution

Figure 5: Histograms of the 1 dimensional phase space distribution at the end of injection for the on-momentum scheme. On the left, $\frac{\Delta p}{p}$. On the right, ϕ.