| REVISIONS | | | | |
|---|---|---|---|---|
| ZONE | REV | DESCRIPTION | DATE | APPROVED |
| | | | | |

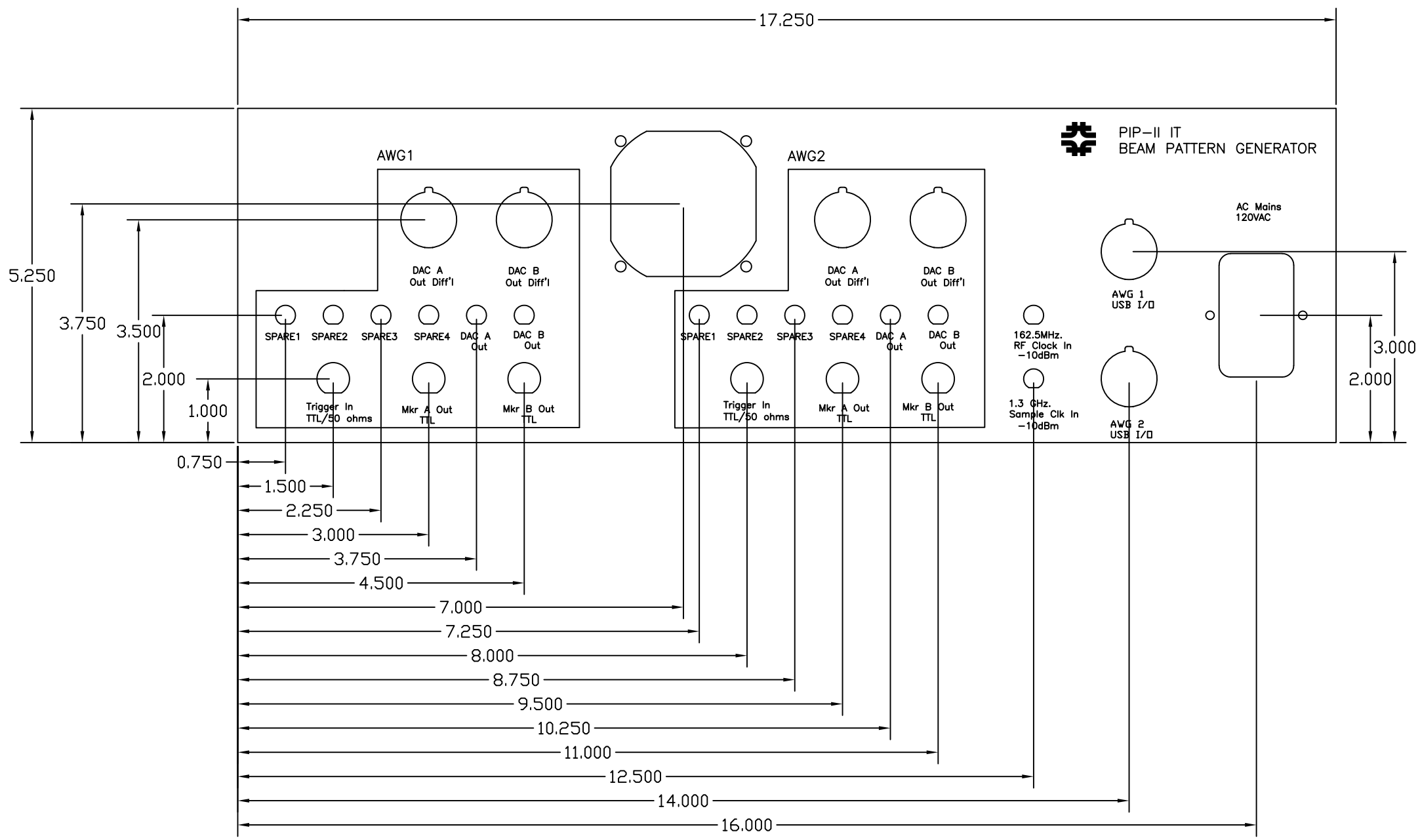


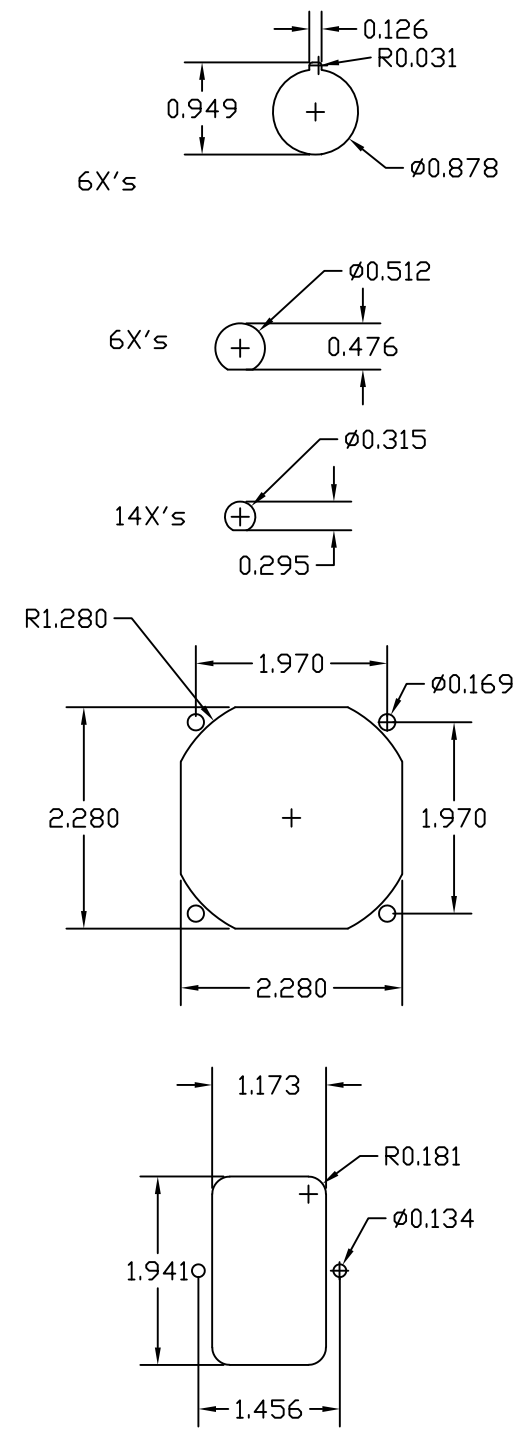


| | |
|---|---|
| Originator: Dan Klepec | |
| Drawn: Dan Klepec | |
| PIP2IT Beam Pattern Generator<br>Chassis<br>Rear Panel Machine | |
| SIZE / FSCM NO. / DWG NO. | REV A |
| SCALE / Date: 5/11/20 | SHEET |