Embedded Device Communication

Prepared for:

Christoph Wimmer
Thierry Debelle
Kalin Taskov

Agenda

Overview CompactRIO/CompactFieldpoint

Ethernet:

- TCP/IP, UDP
- Simple protocols
- Shared variables
- Web Services

OPC

- OPC-UA

EPICS

Communication buses

- Serial
- CAN
- Industrial buses
  - CANopen
  - Ethernet/IP
  - Profibus/ProfiNet

NATIONAL INSTRUMENTS

NI CompactRIO Embedded System Architecture

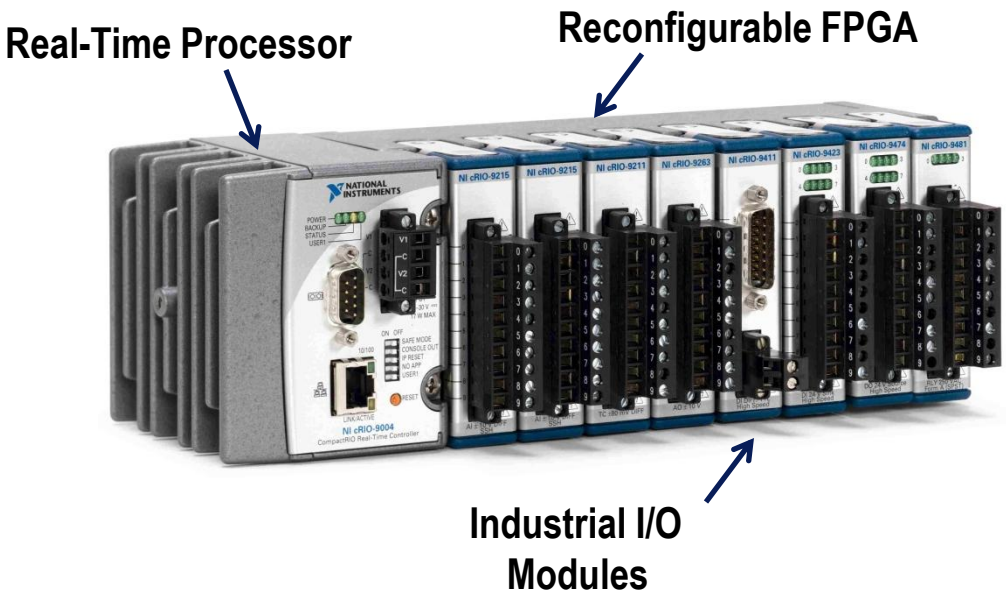

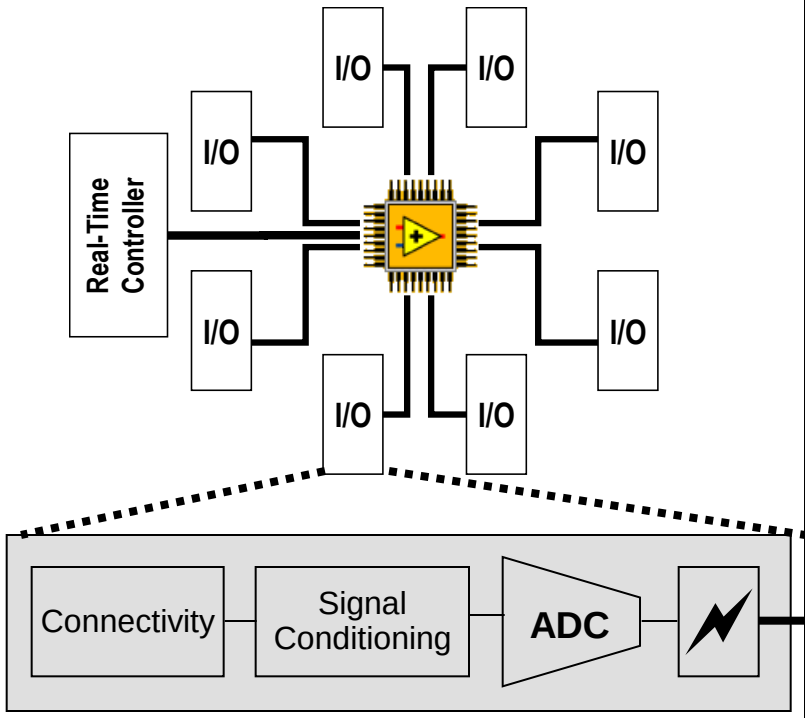

- **Industrial I/O Modules** with built-in signal conditioning for direct connection to industrial sensors/actuators
- **Reconfigurable FPGA** for high-speed and custom I/O timing, triggering, processing, control
- **Real-Time Processor** for deterministic, stand-alone operation and advanced analysis

NATIONAL INSTRUMENTS

Standard Embedded RIO Architecture

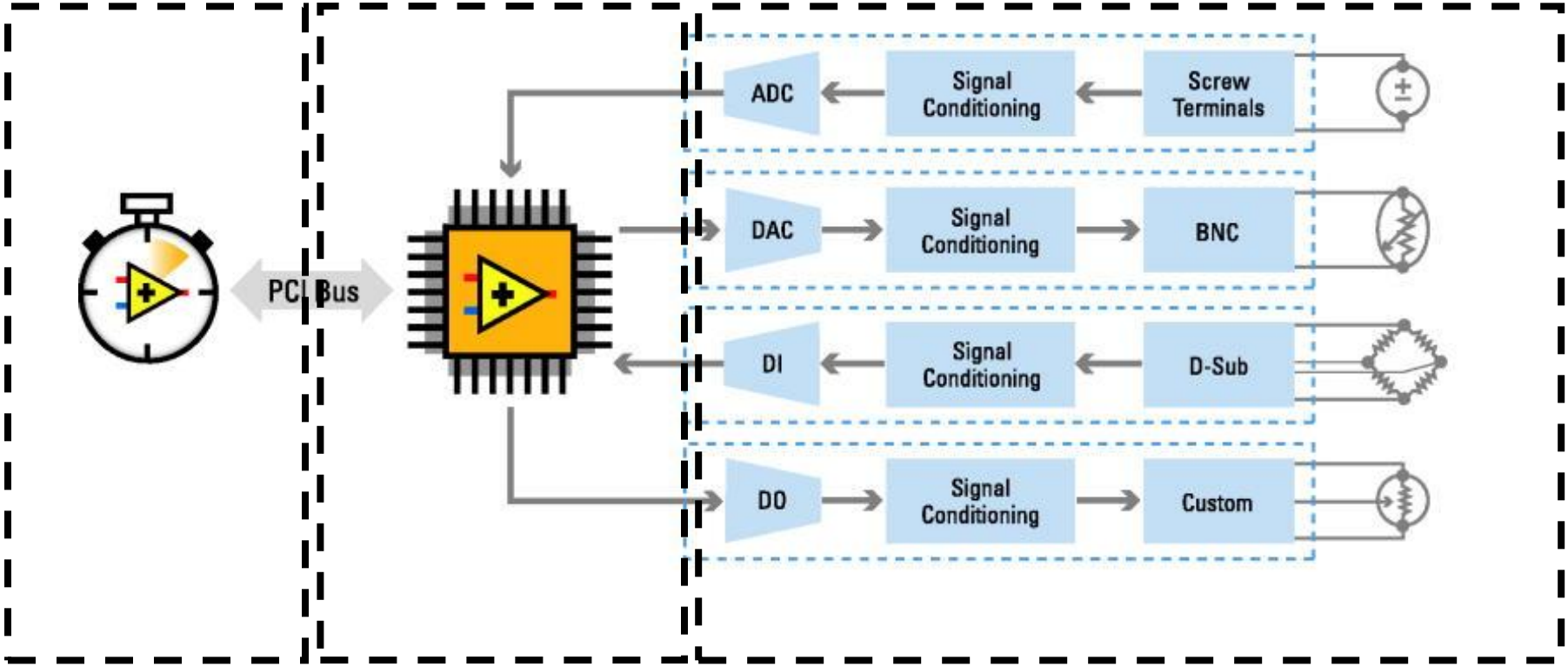

NATIONAL INSTRUMENTS

Compact FieldPoint

1. Analog and Digital I/O
2. Industrial Specs: -40 to 70 °C, 50g shock, 5g vibration
3. Easy to Use
4. Complex Control Applications
5. Embedded Data Logging
6. Built-in Web Server
7. Custom Algorithms and Advanced Math
8. Control of External Devices via Serial or Ethernet
9. Integration with Enterprise Systems

NATIONAL INSTRUMENTS

Software Development

Development

LabVIEW Realtime
LabVIEW FPGA
LabWindows/CVI Realtime

VxWorks®
WIND RIVER

Deployment

Mac OS

NATIONAL INSTRUMENTS

Communication

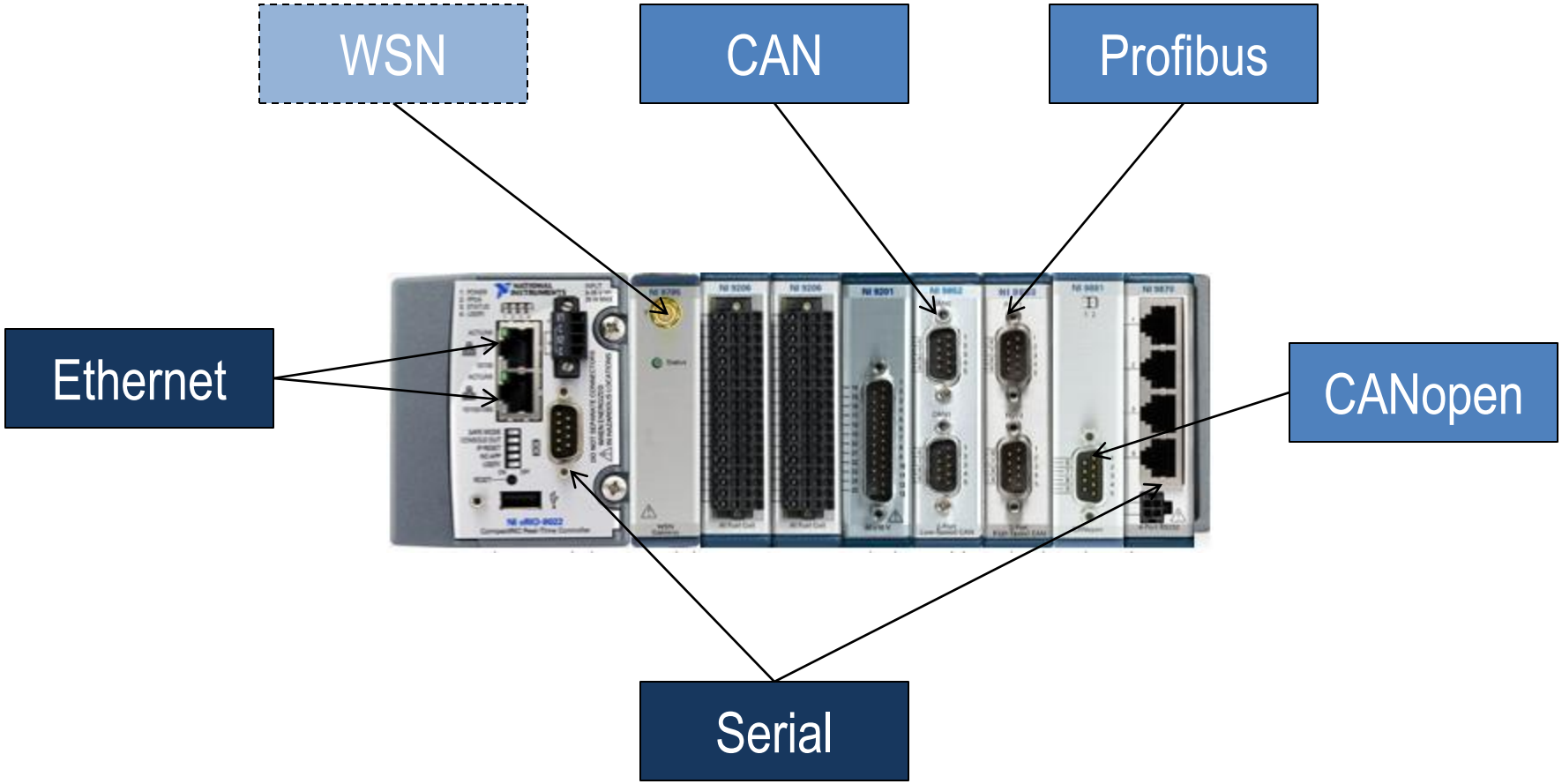

Module Development Kit

Agenda

Overview CompactRIO/CompactFieldpoint

Ethernet:

- TCP/IP, UDP
- Simple protocols
- Shared variables
- Web Services

OPC

- OPC-UA

EPICS

Communication buses

- Serial
- CAN
- Industrial buses
  - CANopen
  - Ethernet/IP
  - Profibus/ProfiNet

NATIONAL INSTRUMENTS

Ethernet

- 1000+m
- 10/100/1000 Mb/s
- Real-time implementation available (Ethercat, ProfiNet, Ethernet/IP, TTP…)
- Widely adopted

NATIONAL INSTRUMENTS

TCP/IP UDP

- RT support
- Examples

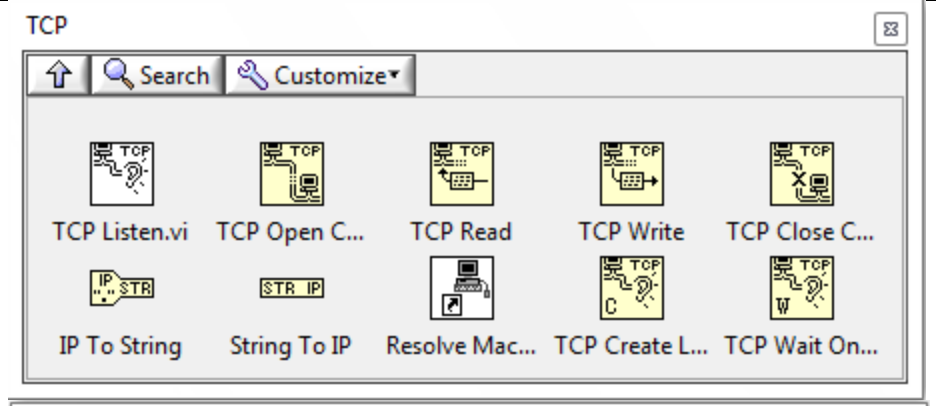

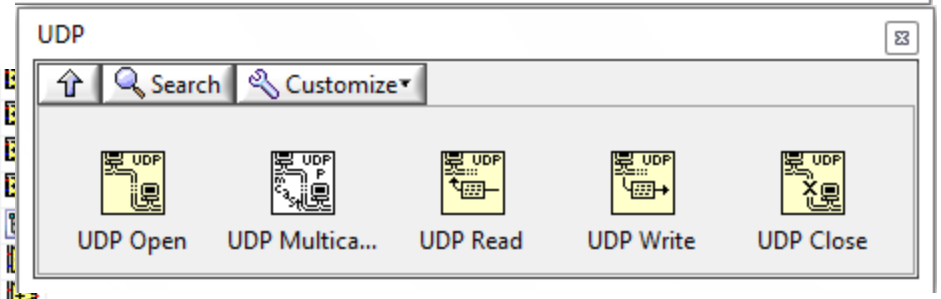

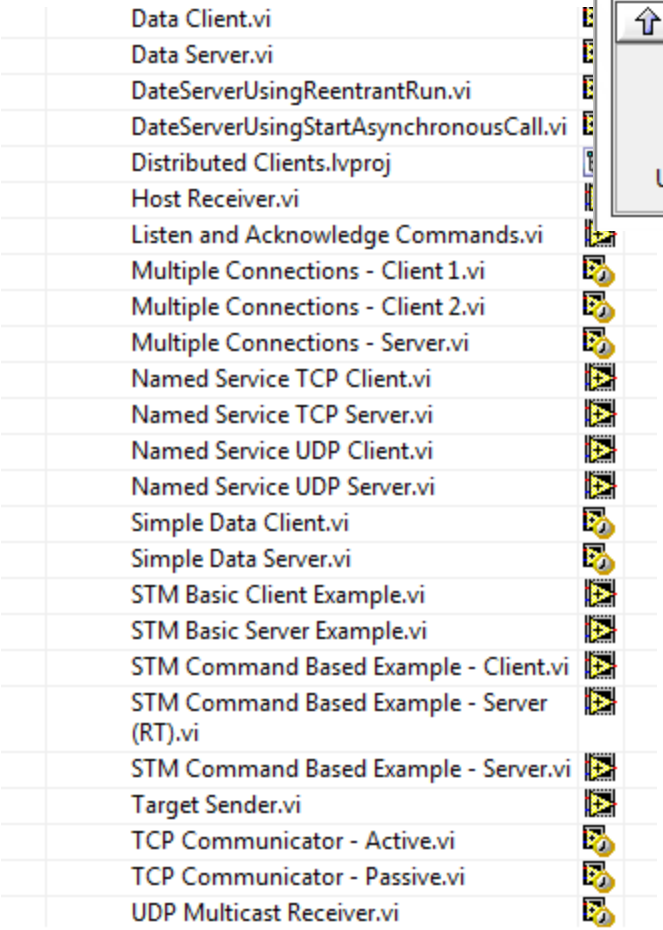

NATIONAL INSTRUMENTS

Simple TCP/IP Messaging Protocol (STM)

- NI developed
- Pre-negotiated message definitions (size, data type, ID) -metadata
- Hides the transport layer (TCP/IP, UDP, etc) implementation details
- Minimizes network traffic
- Message data is sent as a string or byte stream
- Supports many data types
- C++ client available

NATIONAL INSTRUMENTS

STM

Server

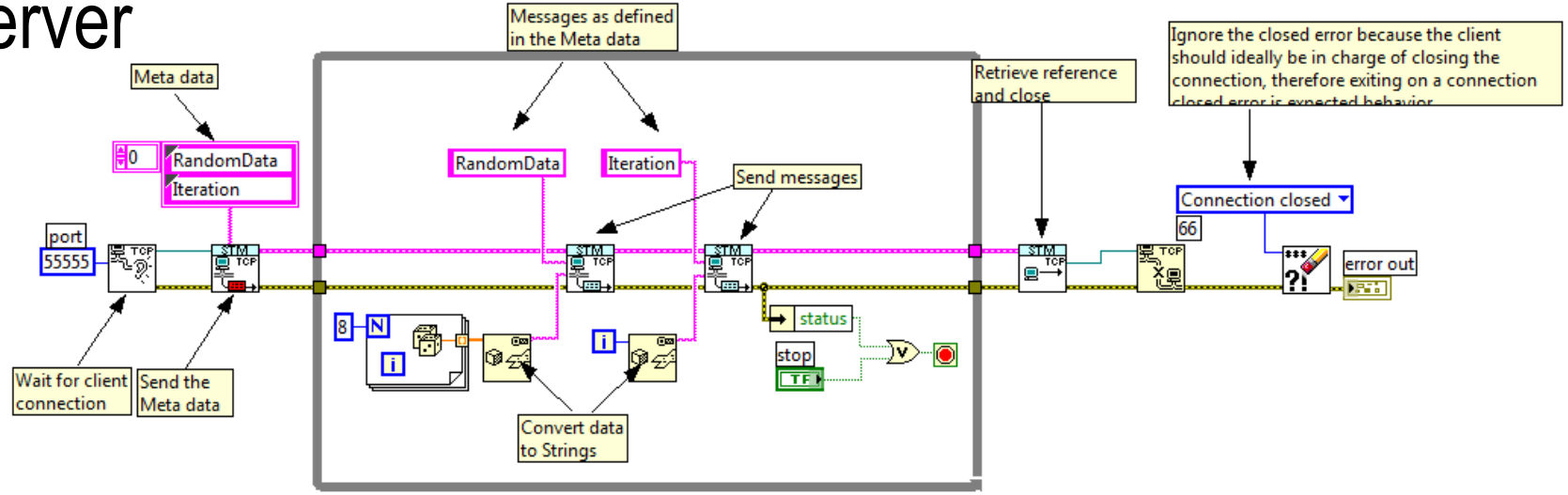

Client

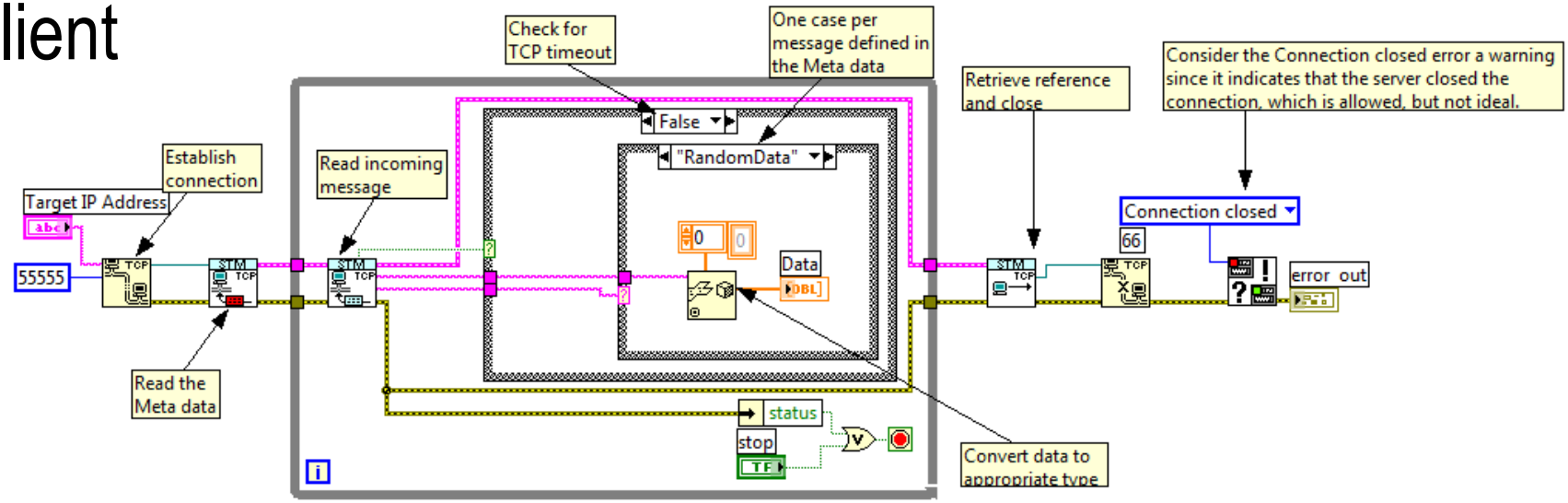

Modbus

- Master/Slave architecture
- Supports: Serial, Ethernet
- LabVIEW library (RT, Windows, Linux)

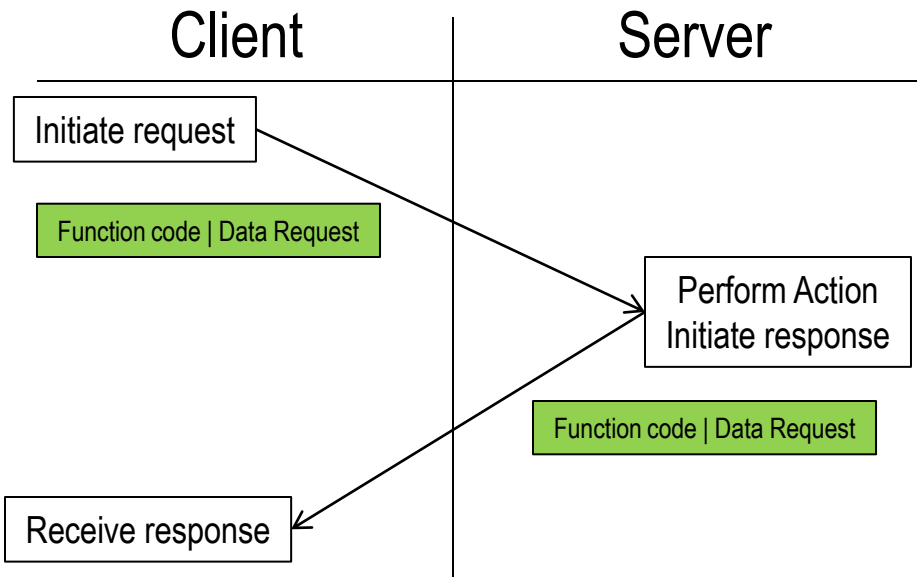

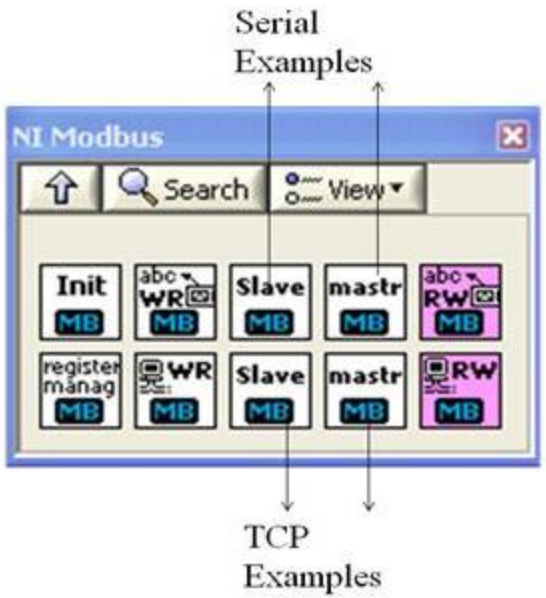

Shared Variable Engine

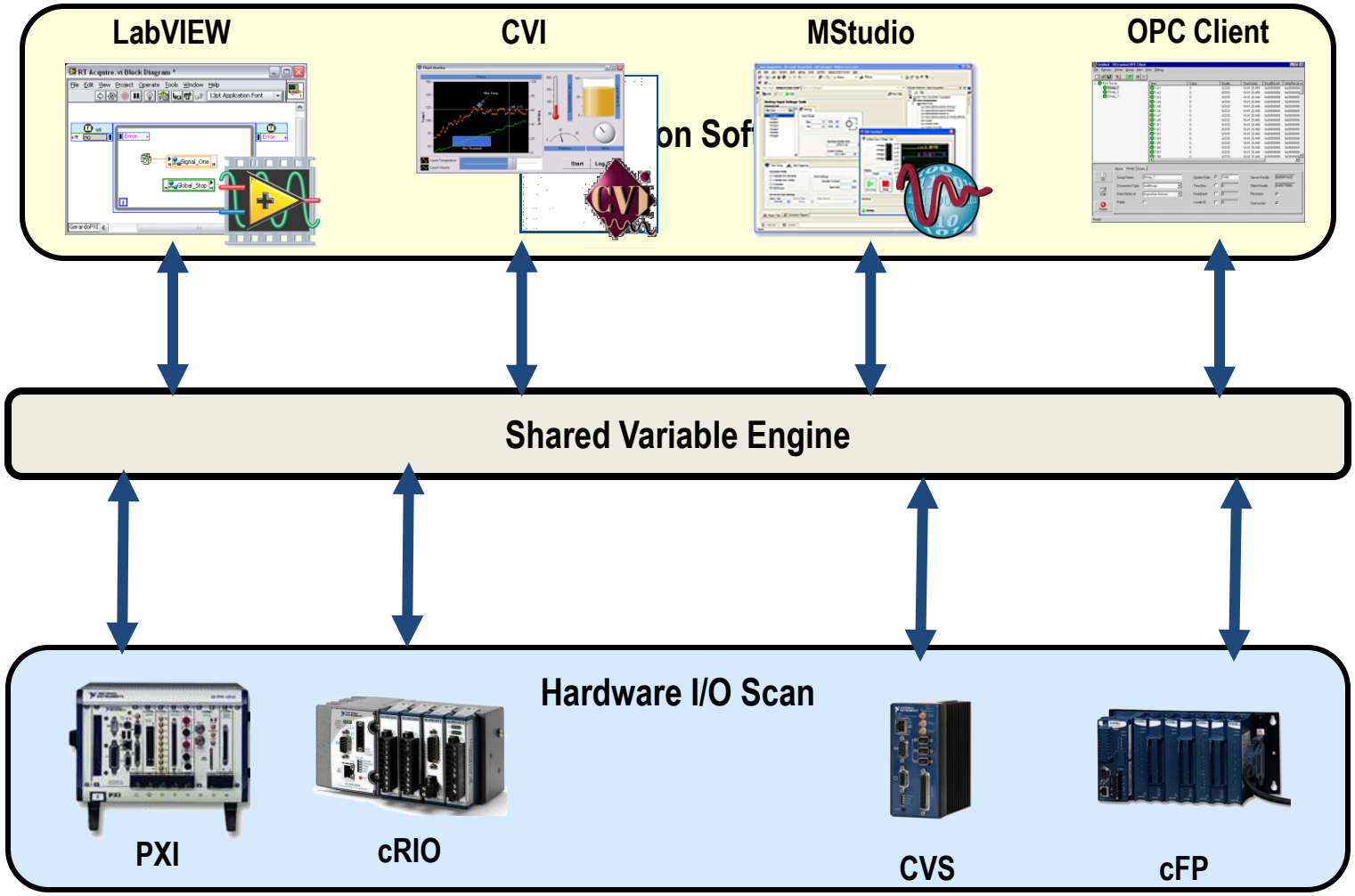

Shared Variable Types

- Single-Process
  - Use instead of Global Variable
- Network-Published
  - Available to any node

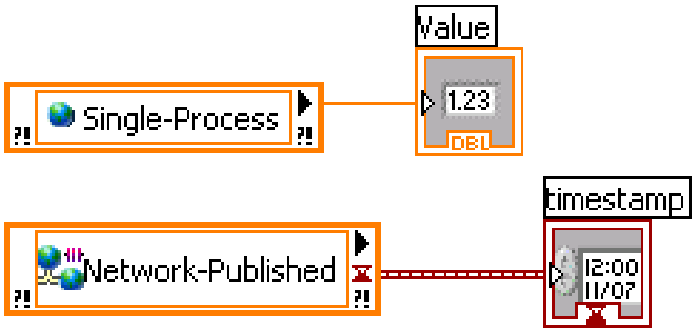

Windows & Realtime

NATIONAL INSTRUMENTS

Web Services in LabVIEW

Web Server

Windows and Real-Time
Custom web clients
No runtime engine needed
Standard http protocol
Firewall friendly

Any Client

Thin Client

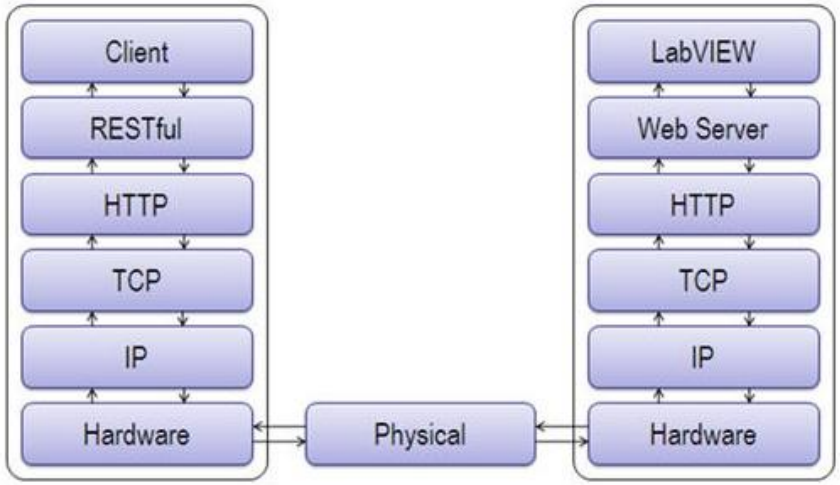

NATIONAL INSTRUMENTS

Agenda

Overview CompactRIO/CompactFieldpoint

Ethernet:

- TCP/IP, UDP
- Simple protocols
- Shared variables
- Web Services

OPC

- OPC-UA

EPICS

Communication buses

- Serial
- CAN
- Industrial buses
  - CANopen
  - Ethernet/IP
  - Profibus/ProfiNet

NATIONAL INSTRUMENTS

OPC

Typical Distributed System Layout

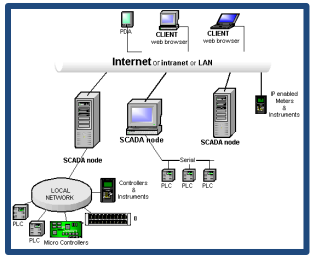

Proprietary Protocols
PROFIBUS
EtherNET IP
DeviceNet
RSLinx

Connectivity

"Open" Protocols
Modbus
Serial
OPC Classic
OPC UA

Deployment Targets

NATIONAL INSTRUMENTS
LabVIEW™

Analysis
Visualization
Data-logging

NATIONAL INSTRUMENTS

What does an OPC Classic system look like?

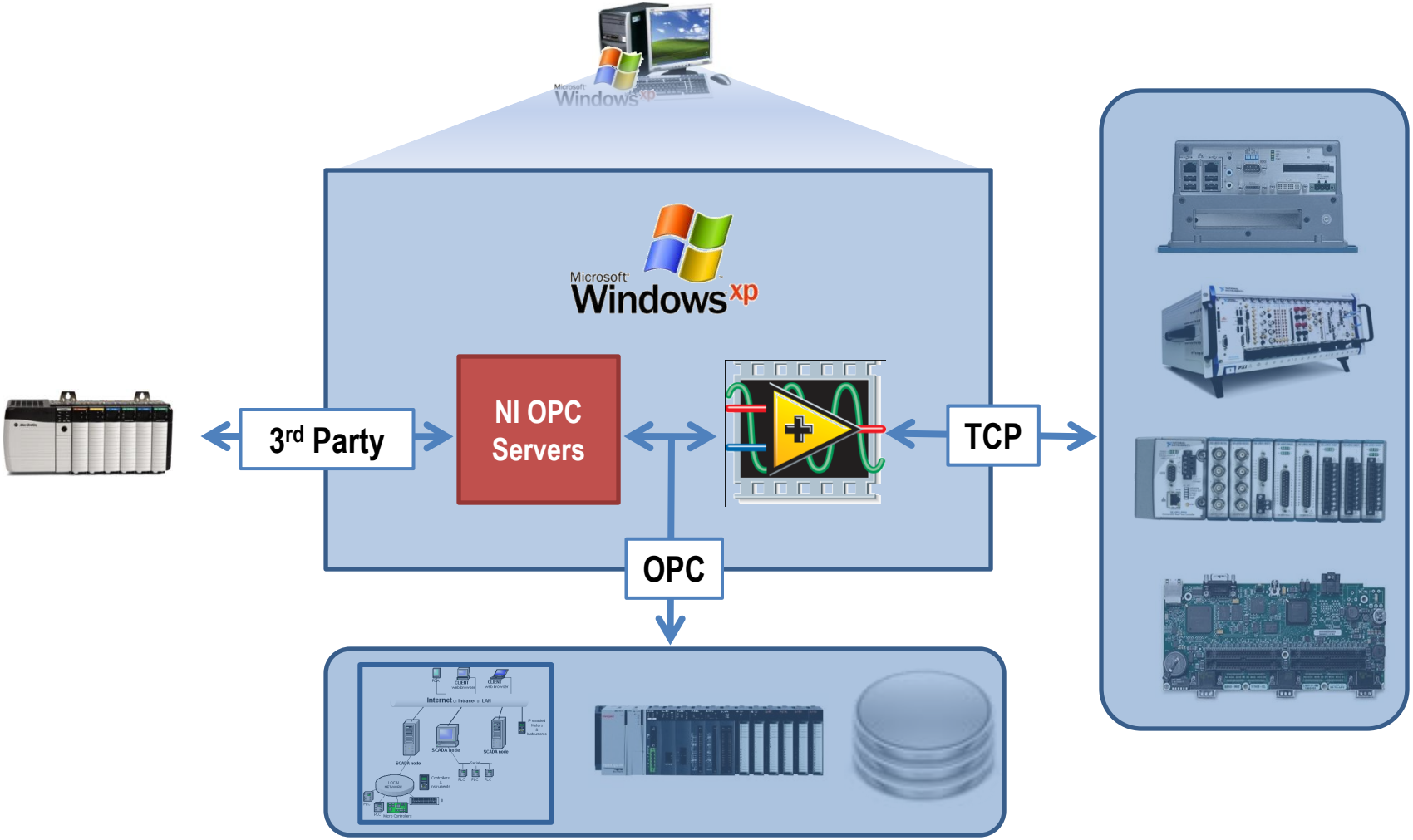

OPC Unified Architecture (OPC UA)

- Operating system independent
  - Removed Microsoft dependence
  - No more DCOM settings

- Improved security
  - Use standard X.509 certificates
  - Encryption

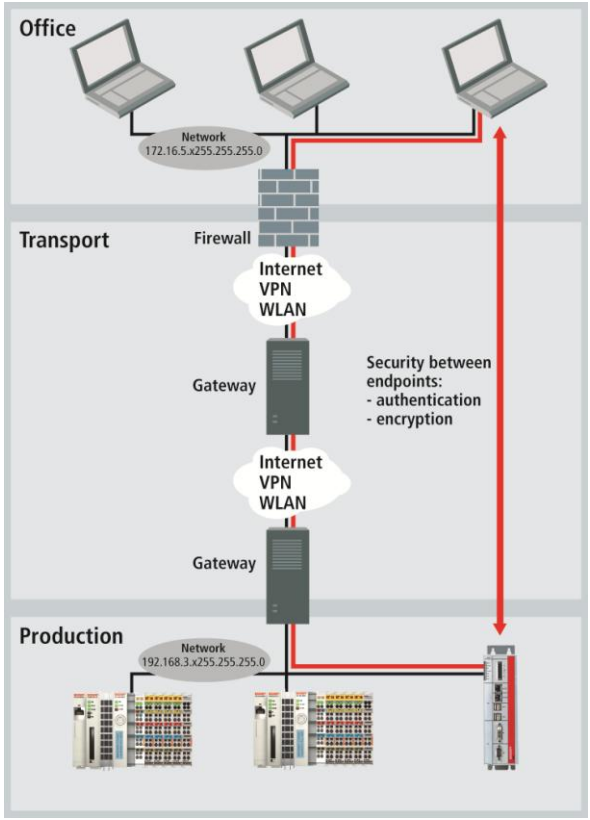

What does an OPC UA system look like?

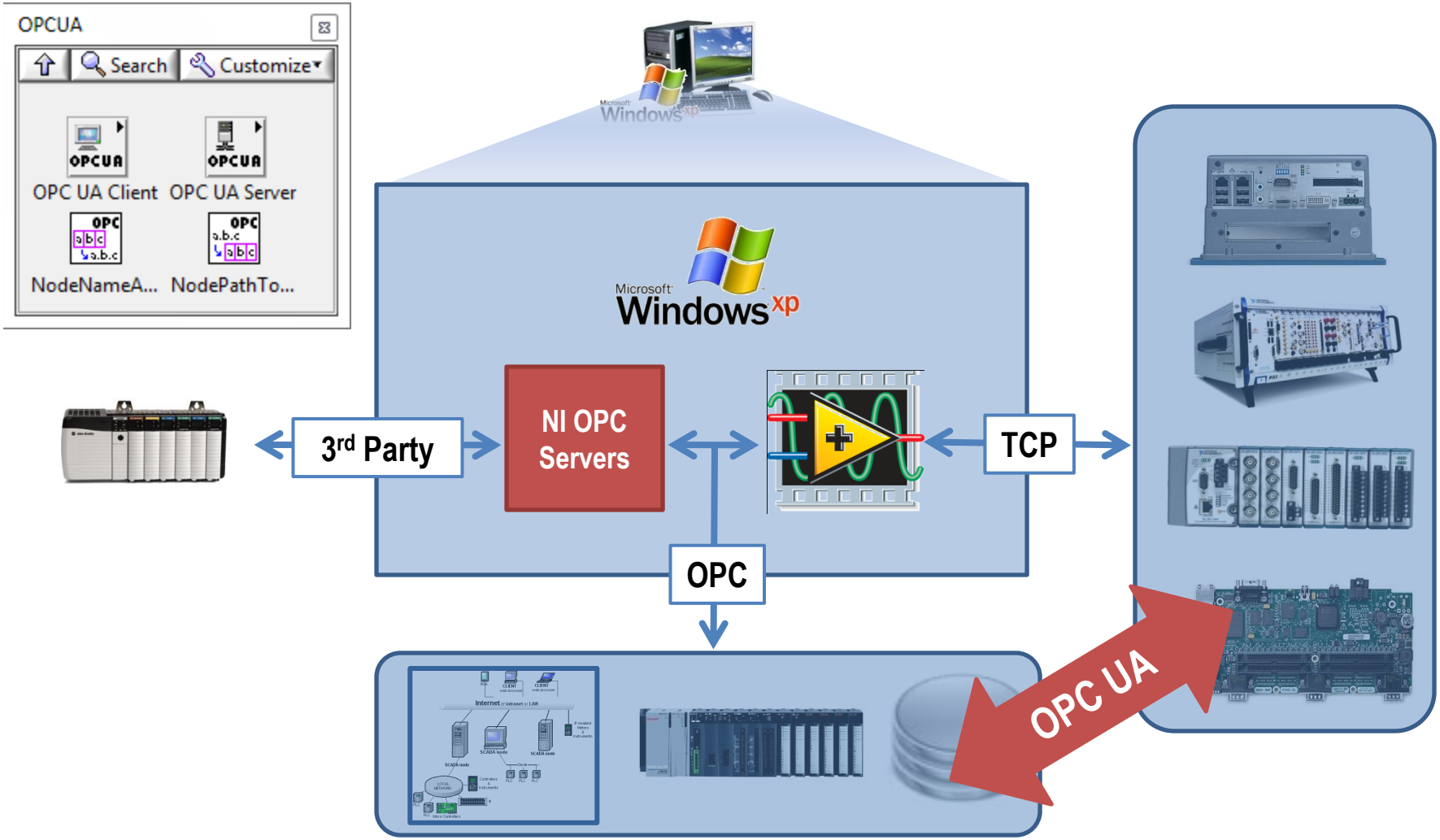

Agenda

Overview CompactRIO/CompactFieldpoint

Ethernet:

- TCP/IP, UDP
- Simple protocols
- Shared variables
- Web Services

OPC

- OPC-UA

EPICS

Communication buses

- Serial
- CAN
- Industrial buses
  - CANopen
  - Ethernet/IP
  - Profibus/ProfiNet

NATIONAL INSTRUMENTS

EPICS

- The EPICS CA Server and EPICS CA Client are implemented as plug-ins to the I/O Server
- In both cases the interface in LabVIEW is implemented via the Shared Variable

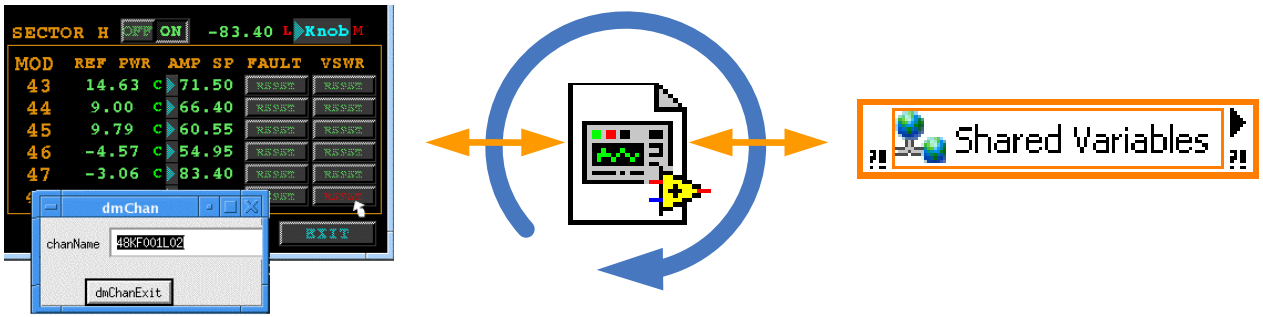

NATIONAL INSTRUMENTS

Architecture

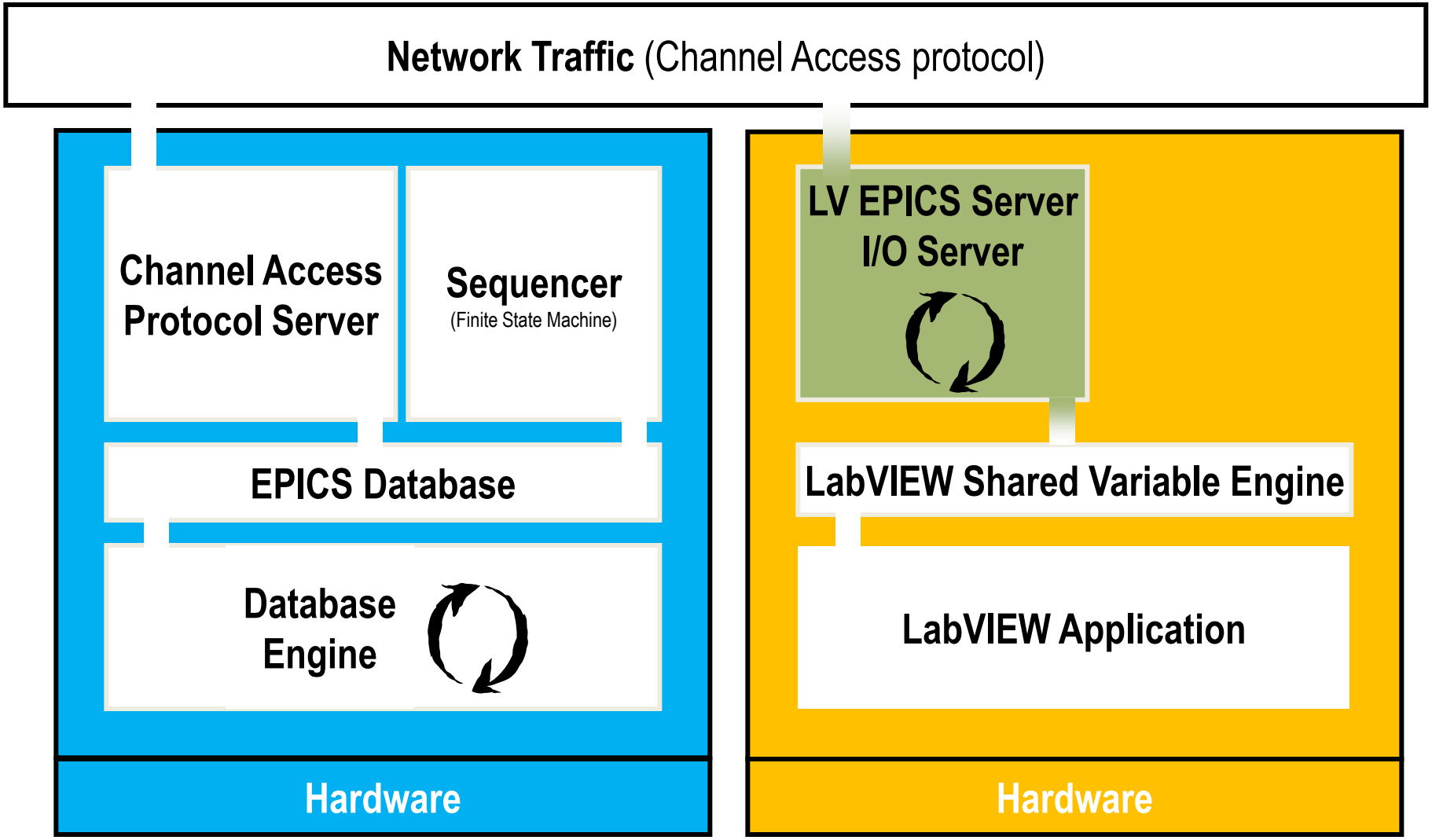

LabVIEW EPICS CA Server/Client

- Runs on LabVIEW for Windows and LabVIEW Real-Time
- Implemented as an I/O Server
- Interfaced via Shared Variable
- Provides Channel Access functionality only
- Programmatic access

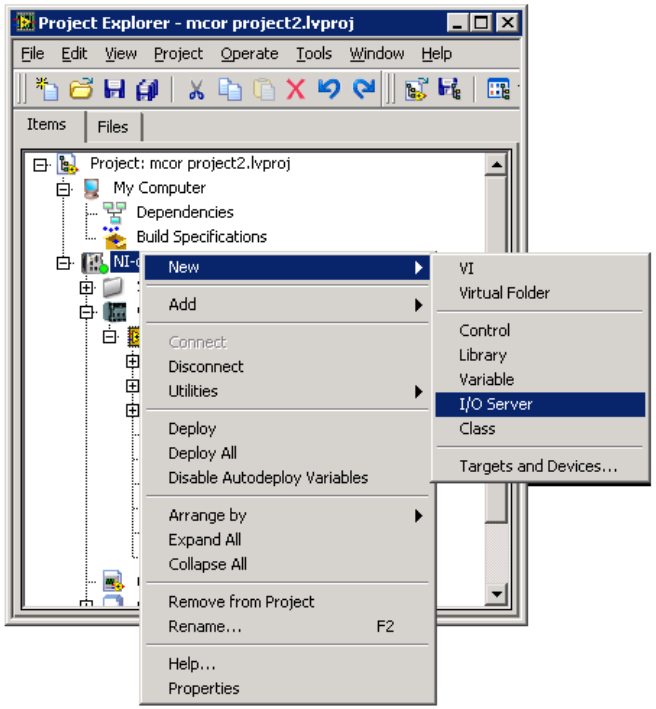

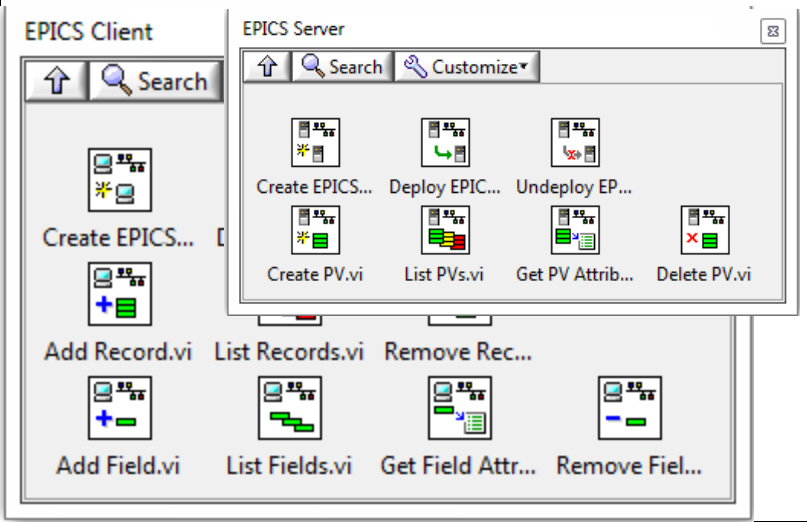

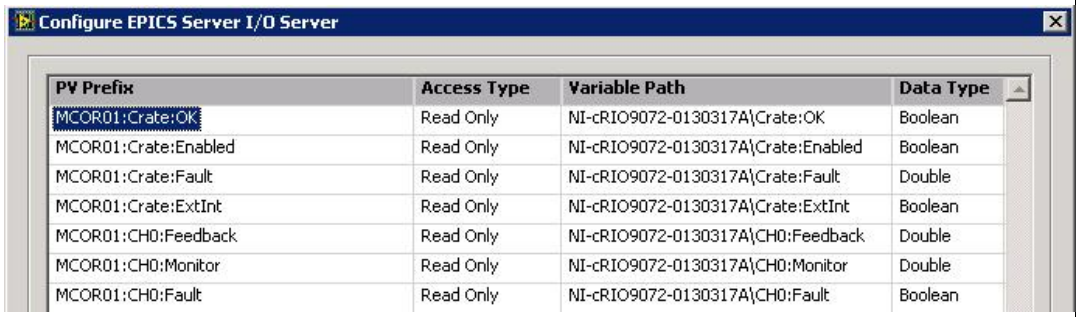

PV Prefix	Access Type	Variable Path	Data Type
MCOR01:Crate:OK	Read Only	NI-cRIO9072-0130317A\Crate:OK	Boolean
MCOR01:Crate:Enabled	Read Only	NI-cRIO9072-0130317A\Crate:Enabled	Boolean
MCOR01:Crate:Fault	Read Only	NI-cRIO9072-0130317A\Crate:Fault	Double
MCOR01:Crate:ExtInt	Read Only	NI-cRIO9072-0130317A\Crate:ExtInt	Boolean
MCOR01:CH0:Feedback	Read Only	NI-cRIO9072-0130317A\CH0:Feedback	Double
MCOR01:CH0:Monitor	Read Only	NI-cRIO9072-0130317A\CH0:Monitor	Double
MCOR01:CH0:Fault	Read Only	NI-cRIO9072-0130317A\CH0:Fault	Boolean

NATIONAL INSTRUMENTS

Supported Data Types

Shared Variable Data Type	PV Type	Data Type Description	PV Category
Single	DBF_FLOAT	Single-precision floating-point number	
Double	DBF_DOUBLE	Double-precision floating-point number	
Int8	DBF_CHAR	8-bit integer	
UInt8	DBF_UCHAR	Unsigned 8-bit integer	Numeric
Int16	DBF_SHORT	16-bit integer	
UInt16	DBF_USHORT	Unsigned 16-bit integer	
Int32	DBF_LONG	32-bit integer	
UInt32	DBF_ULONG	Unsigned 32-bit integer	
Boolean	DBF_ENUM	True or False logical value	Logical
String	DBF_String	A sequence of characters representing readable text	String
Array of Single	DBF_FLOAT	Array of single-precision floating-point numbers	
Array of Double	DBF_DOUBLE	Array of double-precision floating-point numbers	
Array of Boolean	DBF_ENUM	Array of True or False logical values	
Array of Int8	DBF_CHAR	Array of 8-bit integers	Array
Array of UInt8	DBF_UCHAR	Array of unsigned 8-bit integers	
Array of Int16	DBF_SHORT	Array of 16-bit integers	
Array of UInt16	DBF_USHORT	Array of unsigned 16-bit integers	
Array of Int32	DBF_LONG	Array of 32-bit integers	
Array of UInt32	DBF_ULONG	Array of unsigned 32-bit integers	

NATIONAL INSTRUMENTS

Available Fields

- EPICS CA Server
  - On RT targets, the EPICS CA Server only allows you to set the **VAL** field
  - On Windows, when using alarming with LabVIEW DSC, the corresponding fields (**HIHI**, **HHSV**, **SEVR**, etc.) are supported
- EPICS CA Client
  - Any field can be accessed, but a Shared Variable will have to be created per field

Deployment

- To a Real-Time target (PXI, cRIO, sbRIO)
  - Requires that the EPICS CA Server support is included
- To a Windows target
  - Requires the LabVIEW DSC run-time engine, or
  - Requires a full copy of LabVIEW DSC

IOC Server on CompactRIO

Network Traffic
(Channel Access Protocol)

Channel Access Protocol Server

Publishes values from the database onto the network using Channel Access protocol.

Sequencer
(Finite State Machine)

Reads values from the database to drive state changes in the IOC control application.

EPICS Database

Shared Memory

Database Engine

Write I/O values to database. Default update rate is 10 Hz.

LabVIEW Application

Hardware

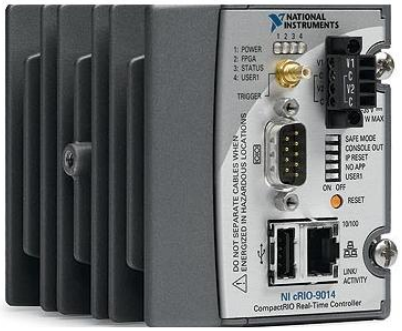

Embedding EPICS IOC on CompactRIO

- EPICS IOC and LabVIEW Real-Time running simultaneously
- Take advantage of FPGA platform with CompactRIO

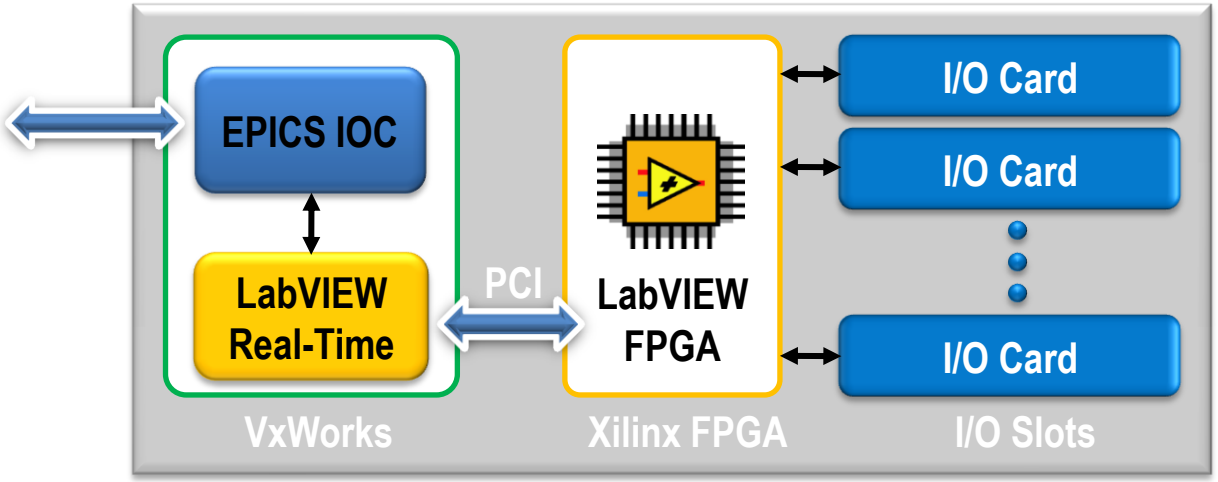

IOC Server on CompactRIO

- CompactRIO controller runs VxWorks
- Implemented via shared memory
- Interface to hardware via LabVIEW RT and FPGA
- Can be used with Scan Mode

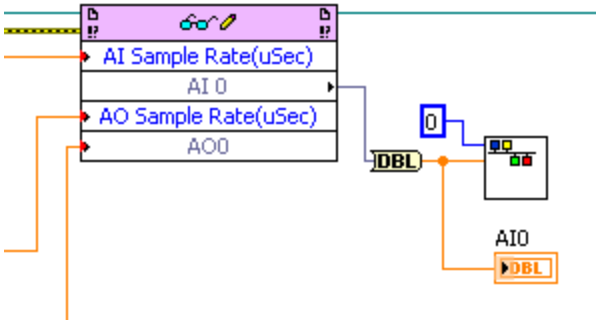

NATIONAL INSTRUMENTS

Possible Implementation

- Create PVs programmatically and use an ini file to modify the names of the PVs
- Each unique system can use the same application where the only difference is a text file

```
[Prefix]
Prefix=NI
[RenamePV]
SetPoint=setp
Temperature=temp
```

NATIONAL INSTRUMENTS

Summary

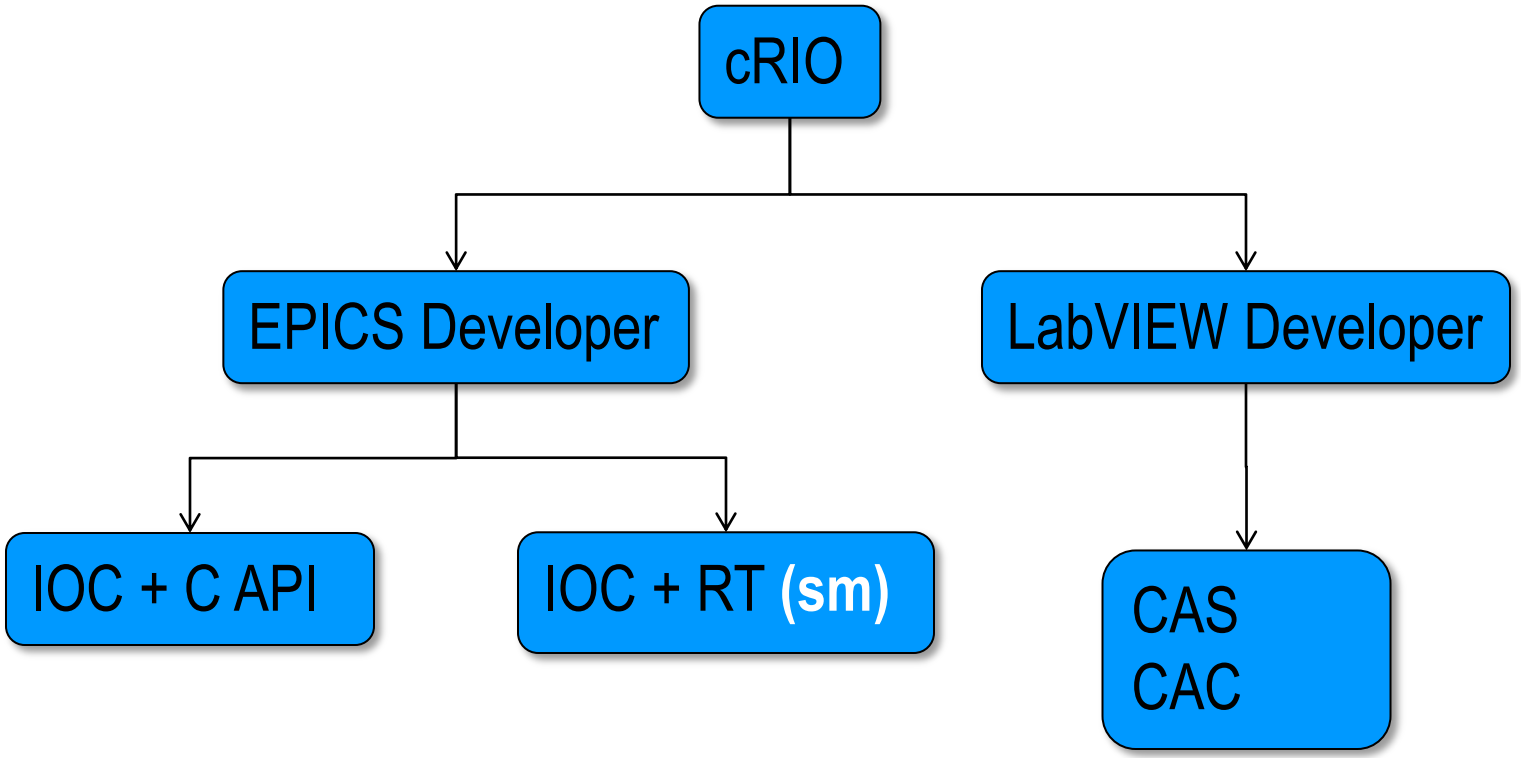
cRIO
EPICS Developer
LabVIEW Developer
IOC + C API
IOC + RT (sm)
CAS
CAC

Agenda

Overview CompactRIO/CompactFieldpoint

Ethernet:

- TCP/IP, UDP
- Simple protocols
- Shared variables
- Web Services

OPC

- OPC-UA

EPICS

Communication buses

- Serial
- CAN
- Industrial buses
  - CANopen
  - Ethernet/IP
  - Profibus/ProfiNet

NATIONAL INSTRUMENTS

Serial

- cRIO: built in RS-232
- RS-232
  - 4 RS232 (TIA/EIA-232) serial ports for CompactR
  - Baud rates from 14 b/s to 921.6 kb/s
  - Data bits: 5, 6, 7, 8; Stop bits: 1, 1.5, 2; Flow control: XON/OFF, RTS/CTS, None
  - Individual 64 B UART FIFO buffers per port
- RS-485/422
  - 4 RS485/RS422 (TIA/EIA-485/422) ports for CompactRIO
  - Baud rates from 14 baud to 3.684 Mbaud; -40 to 70 °C operating range
  - Data bits: 5, 6, 7, 8; Stop bits: 1, 1.5, 2; Flow control: XON/OFF, RTS/CTS, None
  - Individual 64 B UART FIFO buffers per port
  - Transceiver modes: 4-wire, 2-wire DTR controlled, 2-wire DTR controlled with echo, 2-wire auto

NATIONAL INSTRUMENTS

CAN

- Robust
- 2 leads
- Cost effective
- 1Mb/s (<40m)
- Message prioritization
- Alive signal by transmitting messages every 100…1000m
- Failure of one node doesn't affect other nodes

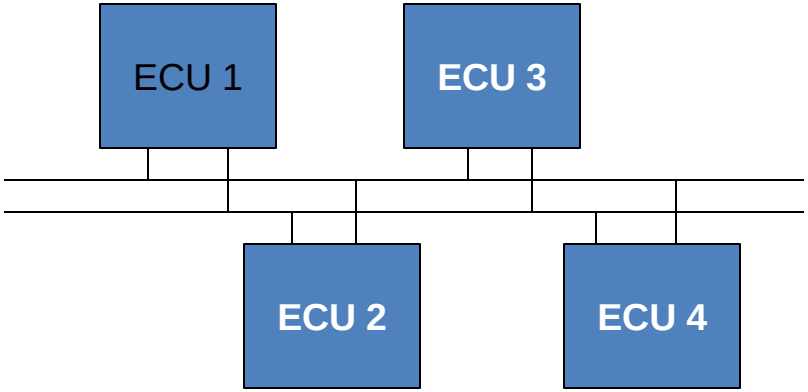

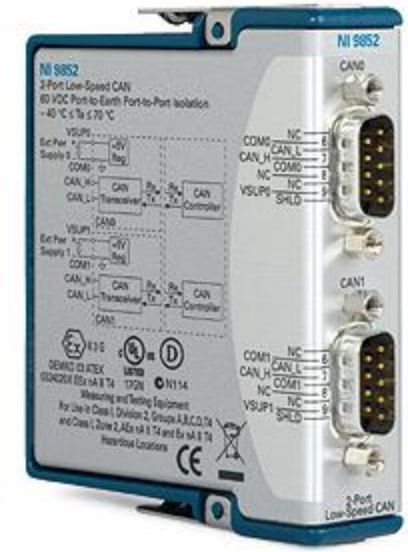

NATIONAL INSTRUMENTS

CANopen

- Based on CAN

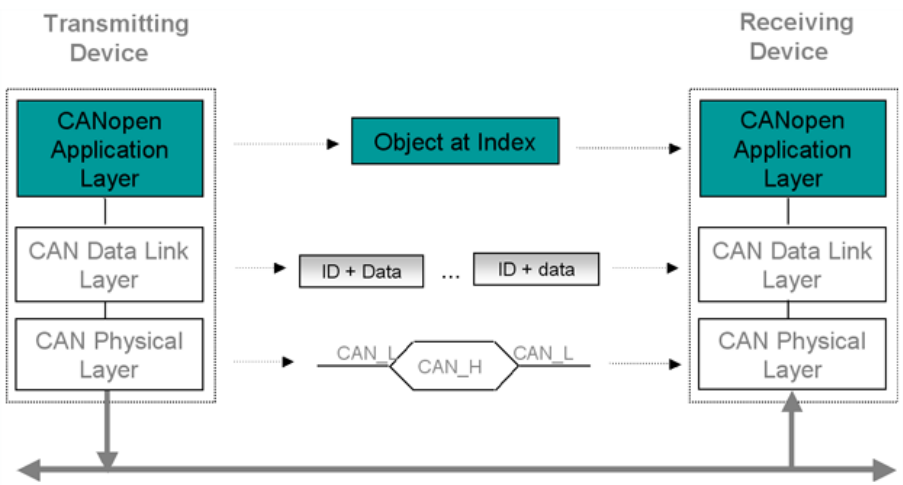

- CANopen device
  - communication interface and protocol software
  - object dictionary
  - process interface and application program

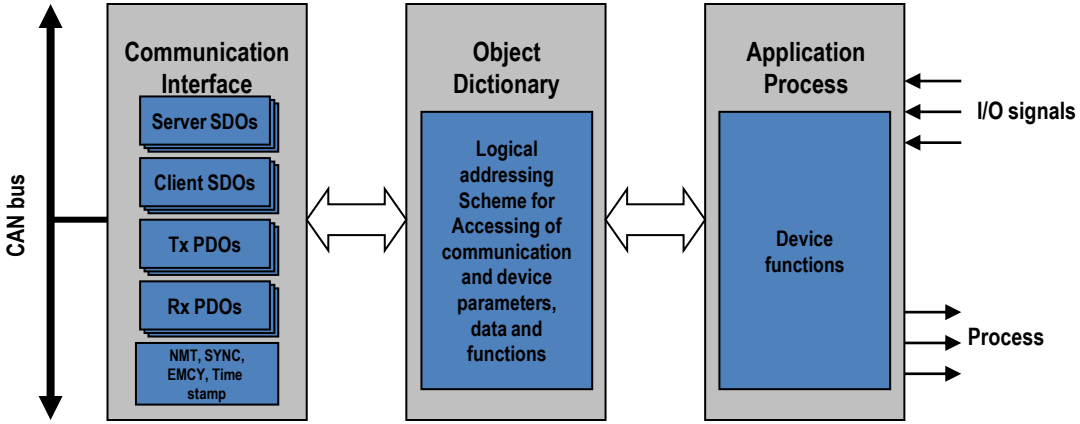

Ethernet/IP

- Rockwell
- EtherNet/IP Class 1 adapter support
- Interact with objects in the Common Industrial Protocol (CIP) object module on an EtherNet/IP device

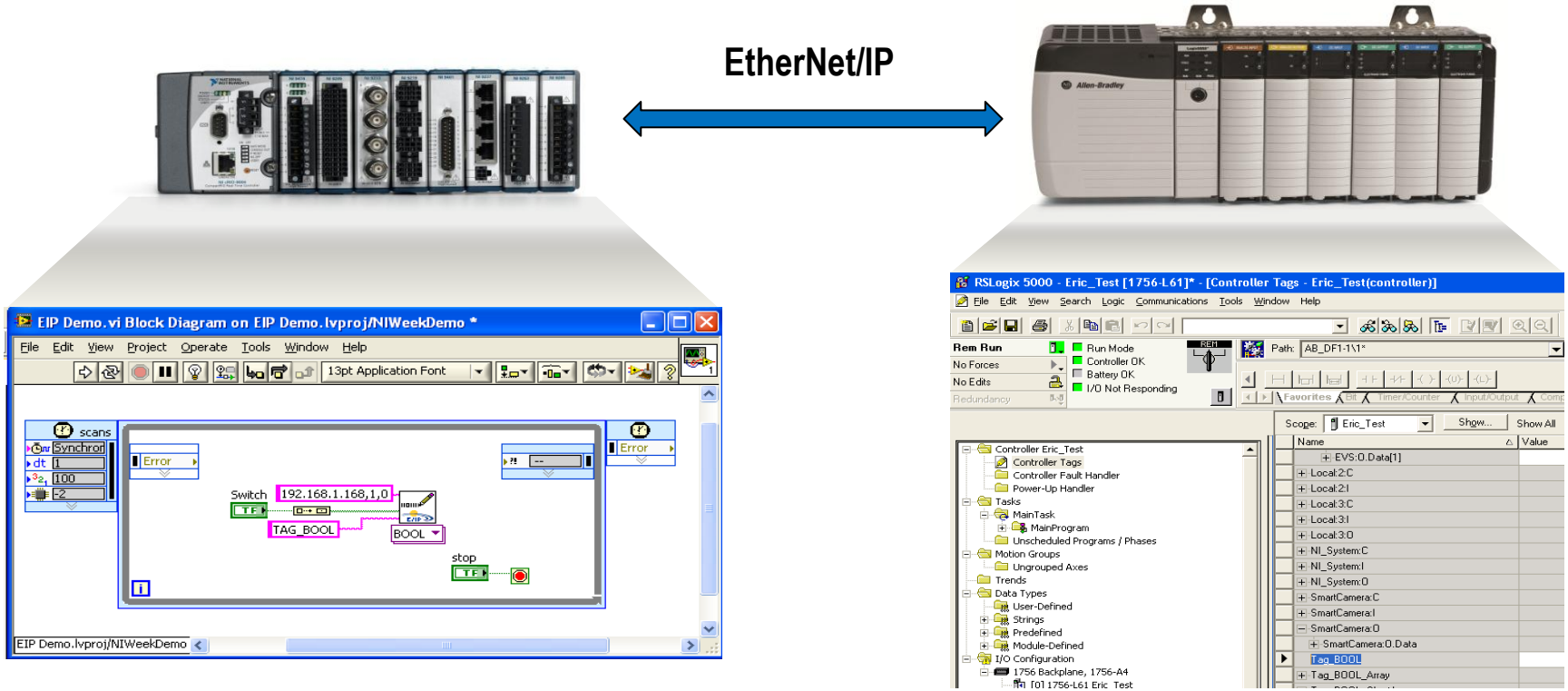

NATIONAL INSTRUMENTS

Profibus/ProfiNet

- Siemens
- PROFIBUS DP (Decentralized Periphery)
  - communication between the Controller level of a process automation system (PLC) and the decentralized periphery in the field.
- PROFIBUS PA (Process Automation)
  - Developed for the process industry
  - Communication and power supply to Transmitter and Positioners via one 2-wire cable

- Supported services: DPV0 Master Class 1/2, DPV0 Slave
- PROFIBUS DP RS485 baud rates from 9600 bits/s to 12Mb/s

- ProfiNet module in development

NATIONAL INSTRUMENTS

Ethercat: Deterministic Distributed Systems

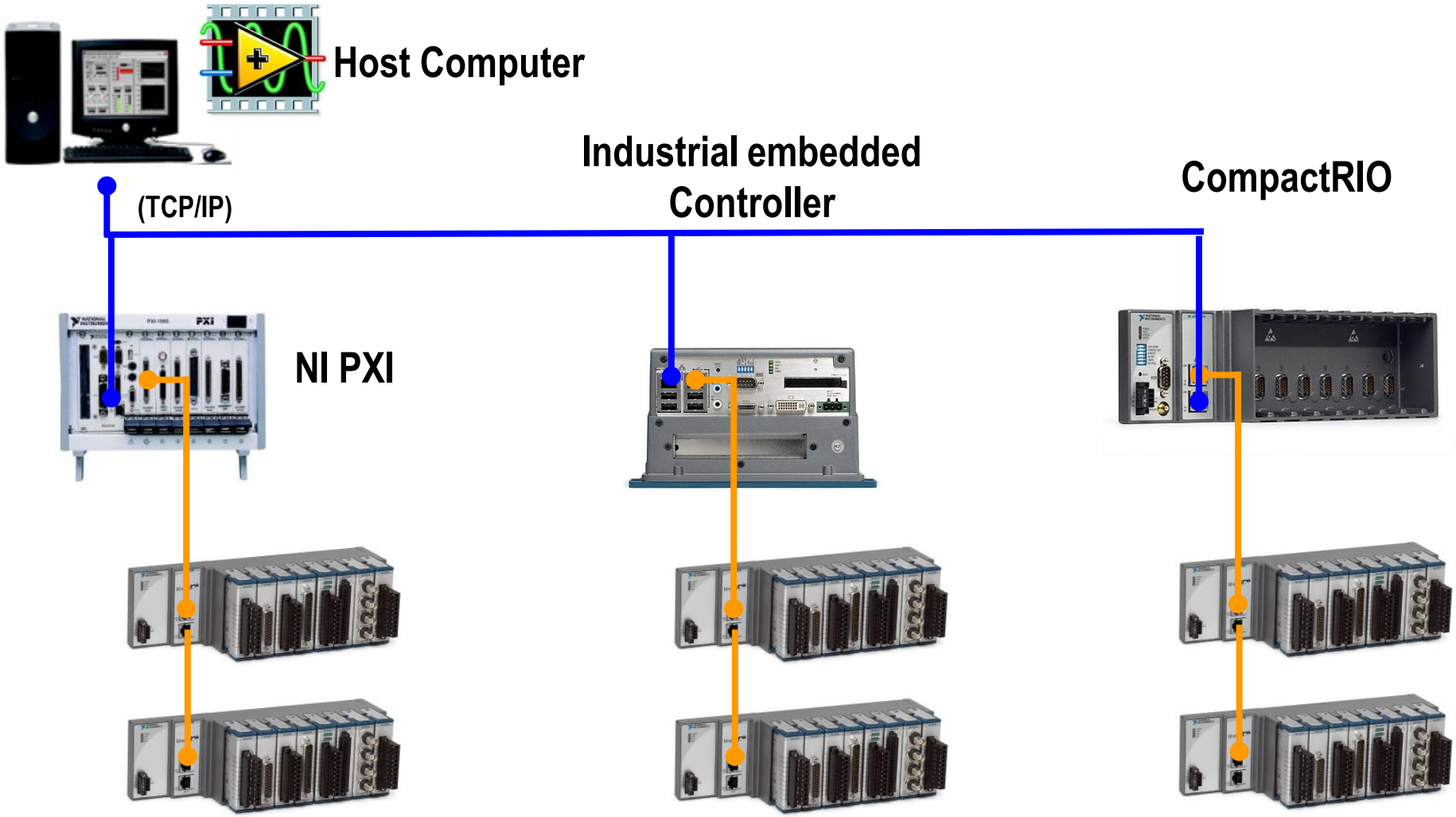

NATIONAL INSTRUMENTS

Comparison

Communication	OS
TCP/IP, UDP	Win, Linux, MacOS, RT, others
STM	Win, Linux, MacOS, RT, others
Modbus	Win, Linux, MacOS, RT, others
Shared Variables	Win, RT
Web Services	Server: Win, RT Client: Win, Linux, MacOS, RT, others
OPC	Win
OPC-UA	Win, Linux, RT, others
EPICS IOC/CA	Linux, Win, RT
CAN	HW
Ethernet/IP	Win, Linux, RT
Profibus	HW

Selection criterias

- Other systems to integrate
- Performance
- Distance
- Real-time capability: control
- Special: Safety, environment,…

NATIONAL INSTRUMENTS

Questions?