Angular Measurement of Photons from Undulator Radiation (AMPUR) in IOTA's Single Electron Mode

Proposal can be found (updated occasionally): https://cdcvs.fnal.gov/redmine/projects/ampur/repository

EVAN ANGELICO, UNIVERSITY OF CHICAGO

IOTA RUN 2 MEETING 10/18/2019

The idea: record a sample of 2-photon emission events and measure the existence of angular correlations on a pass-by-pass basis

Introduction and presentation outline

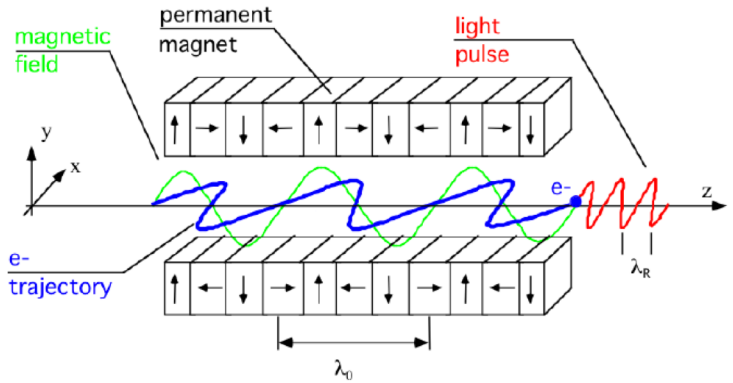

* figure from http://old.clio.lcp.u-psud.fr/clio_eng/FELrad.html

- Multi-photon emission
- Differential rates?
- Photons' arrival times?

- Part 1: Theoretical predictions
  - QED approach with Dirac-Volkov solution
    (classical undulator field + quantum electron + quantized radiation)
  - Glauber's approach
    (classical current + quantized radiation)

Slide from Ihar Lobach's talk in 2018, "Dirac-Volkovmodel; Glauber's model; IOTA experiment ideas (for undulator radiation produced by a single electron)"

Dirac-Volkov approach has already been used for electron in constant uniform magnetic field

TWO-PHOTON SYNCHROTRON EMISSION

A. A. Sokolov, A. M. Voloshchenko, V. Ch. Zhukovskii, and Yu. G. Pavlenko

A second-order effect of perturbation theory — two-photon cussed for an ultrarelativistic electron in a constant and un $H \ll H_0 = 4.41 \cdot 10^{13}$ Oe on the basis of the exact solutions of

Formation length in uniform field $\sim R/\gamma$

For undulator, formation length will be the entire length of undulator

Fermilab

2 11/9/2018 Ihar Lobach I Single-electron experiments in IOTA

Phase 0

- Observe two-photon emission in IOTA
- Measure 1-ph and 2-ph rates in this practical environment (viewports, mirrors, lenses…)
- Practice using electronics / DAQ / trigger systems on a small photo-detector with 4-channels

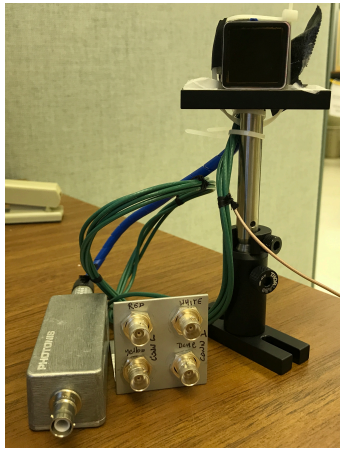

Planacon

Phase 1

- Use large area photo-detector with <1 mm spatial resolution. Expand the UR emission cone radius by a factor of 10
- Precision measurement of angular distribution (and correlations?) of 2-ph emission

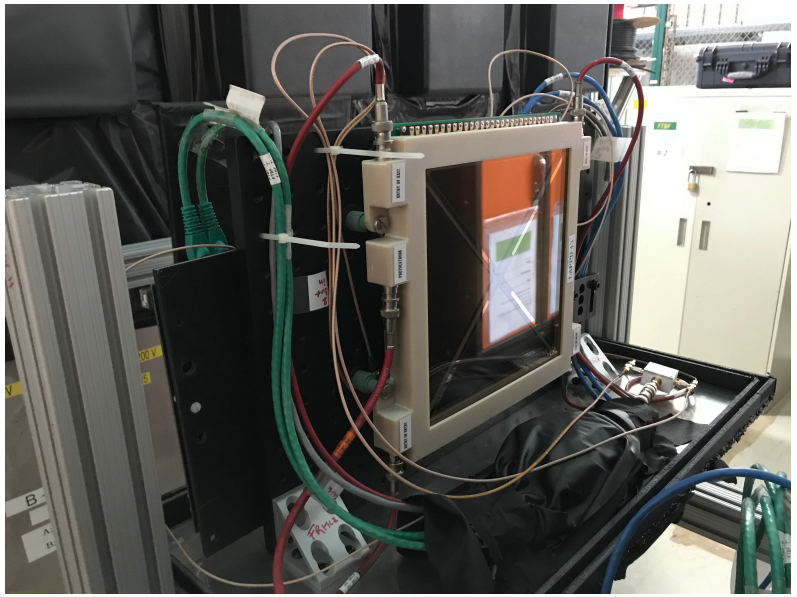

LAPPD

The photo-detector

”Micro-channel plates”

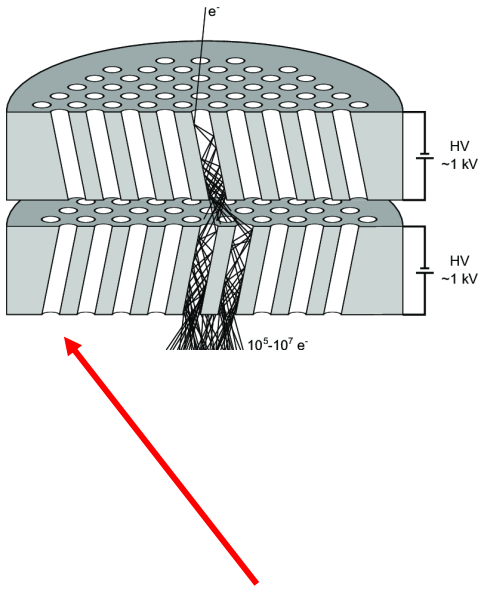

10 micron pore diameter

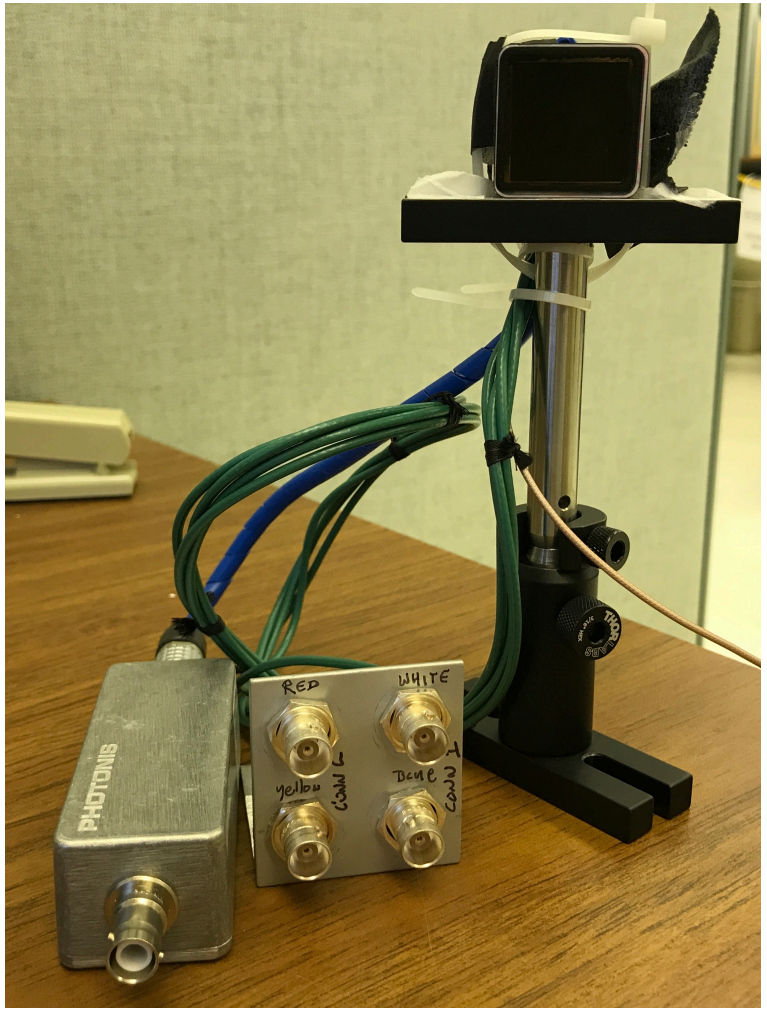

- 2 cm x 2 cm area fully contains the 1.5 cm diameter UR cone already directed to the M4R dark-box
- Is a 4 pixel detector with charge sharing between the pixels. Has the option of coarse position reconstruction
- Low channel count
- Easy to install
- Low noise (also applies to LAPPDs)

The photo-detector

This Planacon's single-photoelectron charge

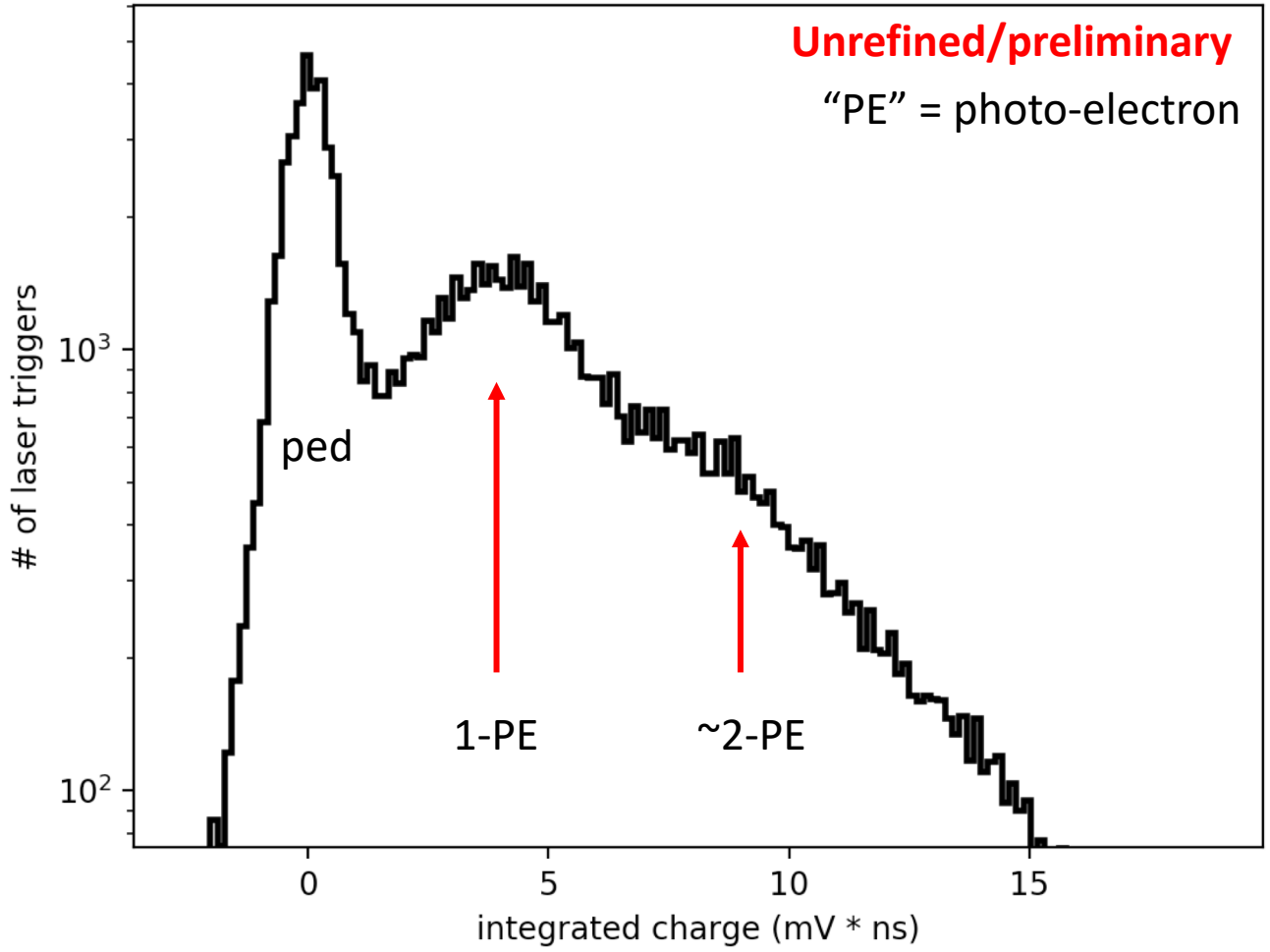

- For DAQ scheme where triggering on a constant threshold with NIM units, will likely amplify pulses
- Photons may be on top of each other or separate in space but in same trigger window

Distinguishability of 1 vs 2 photons is a critical part of this measurement

The undulator

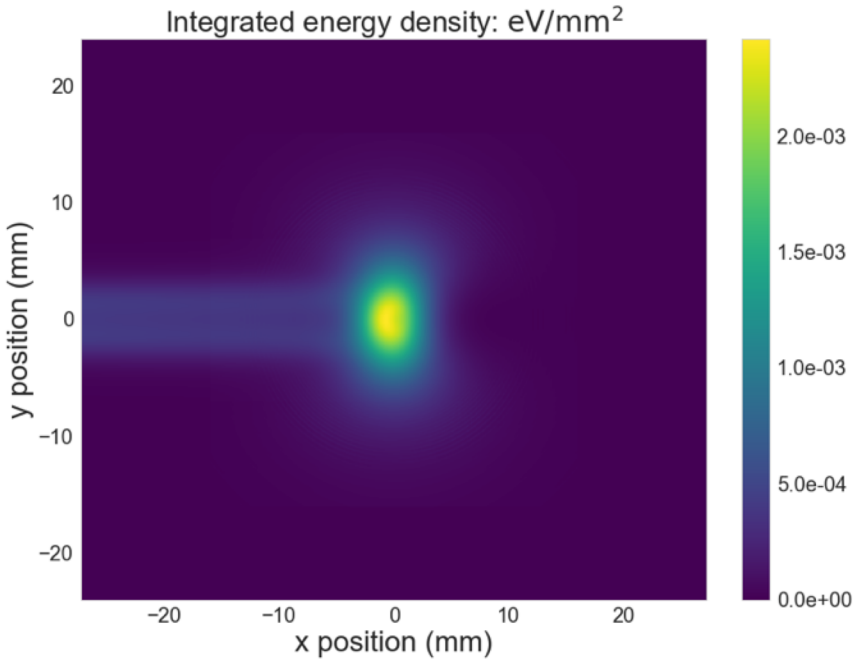

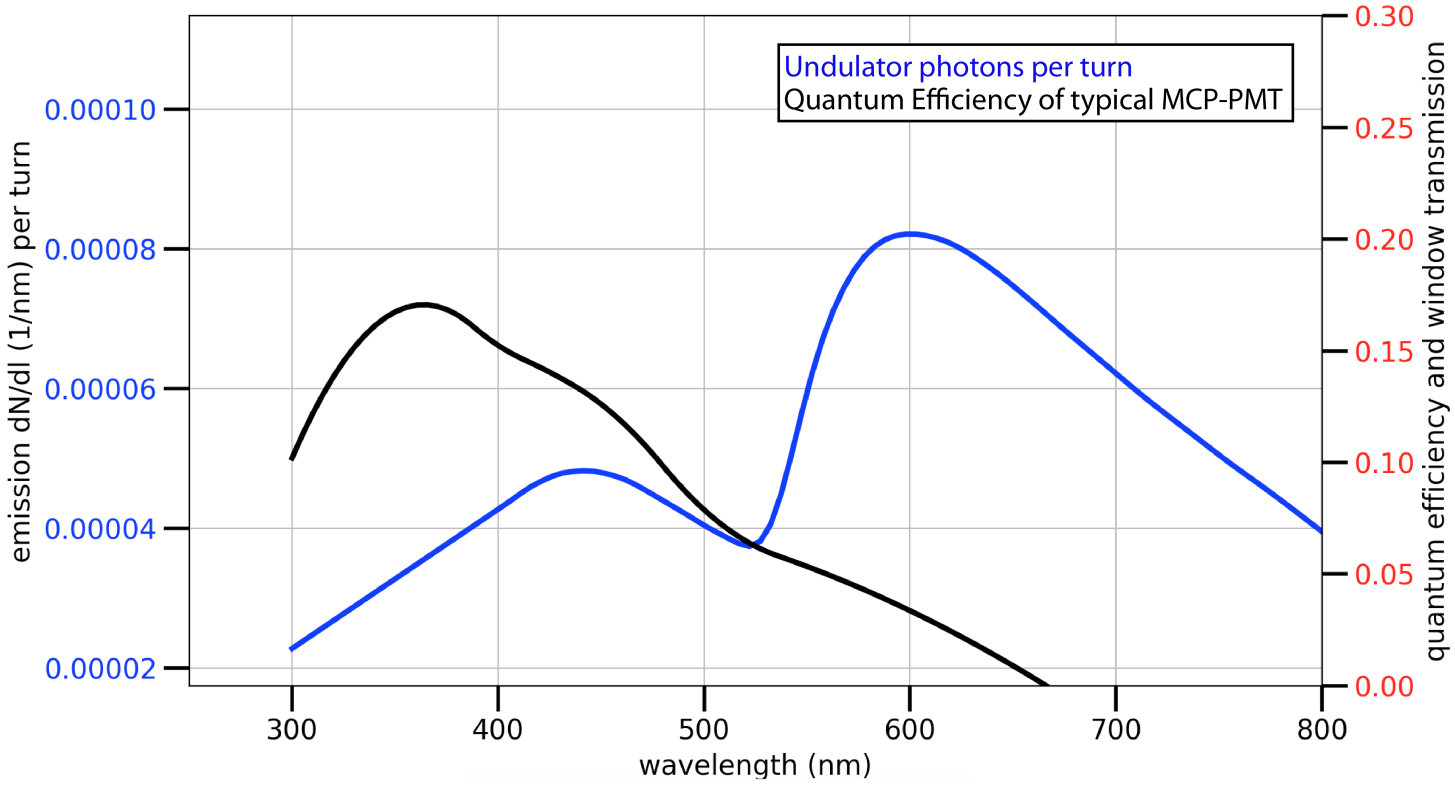

Dipole and undulator radiation in all wavelengths at 3.5 m from center of undulator (location of dark-box)

Estimation of rates from this simulated data on next slide

[4] Ihar Lobach, Valeri Lebedev, Sergei Nagaitsev, Alexander Romanov, Giulio Stancari, Aliaksei Halavanau, Zhirong Huang, Kwang-Je Kim. "Intensity Fluctuations in Undulator Radiation". To be submitted to PRAB. 2019

[5] Code for calculations of undulator emissions found at https://cdcvs.fnal.gov/redmine/projects/fur/files

The rates

Let's assume that the two photons emitted in one pass are statistically independent…

Total two-photon event rate

$$R^2 = \int d\lambda \frac{dN}{d\lambda} \int d\lambda \frac{dN}{d\lambda}$$

Single photon emission probabilities squared

Notation:
Upper index = number emitted
Lower index = number detected

$$R_1^1 = \int d\lambda \frac{dN}{d\lambda} Q$$

$$R_2^2 = \int d\lambda \frac{dN}{d\lambda} Q \int d\lambda \frac{dN}{d\lambda} Q$$

$$R_1^2 = 2 \int d\lambda \frac{dN}{d\lambda} Q \int d\lambda \frac{dN}{d\lambda} (1 - Q)$$

$$R_1 = R_1^1 + R_1^2 \simeq 9500 \text{ Hz}$$

$$R_2 \simeq 10 \text{ Hz}.$$

Code to calculate this can be found here: https://cdcvs.fnal.gov/redmine/projects/ampur/files

DAQ and setup

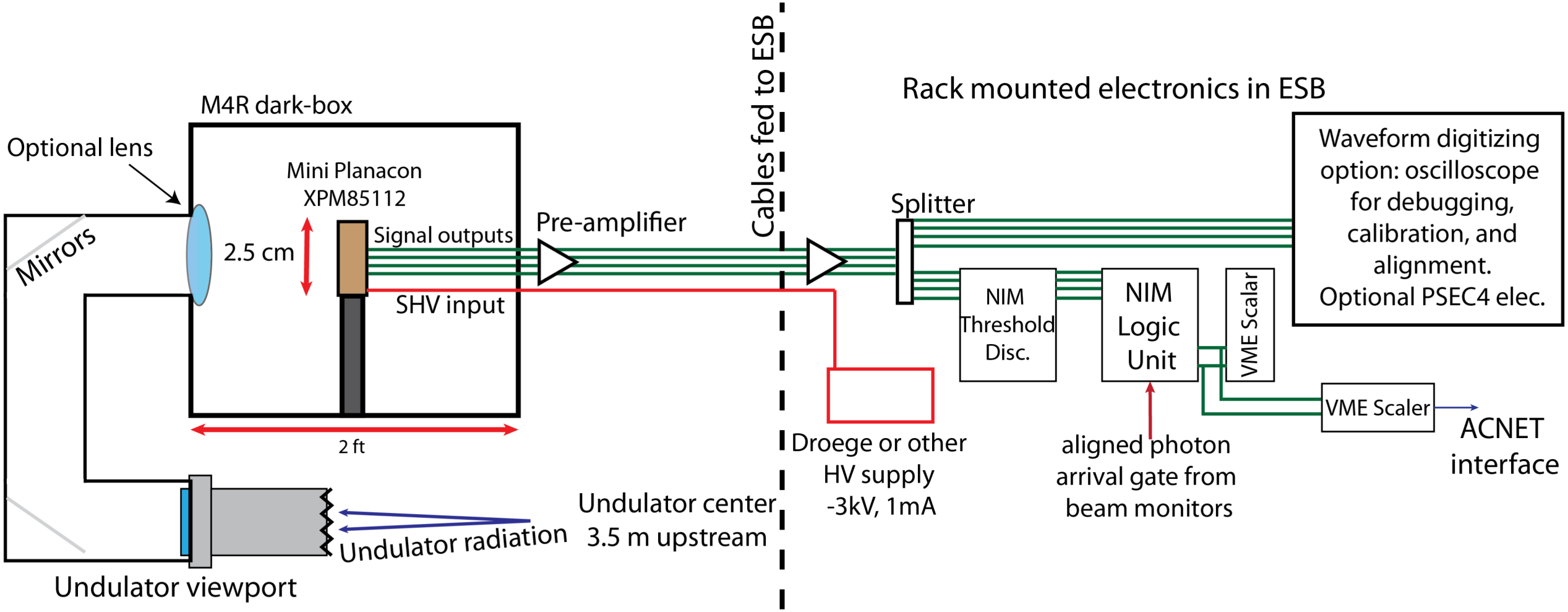

DAQ and setup

Measurables in this configuration:

- Planacon properties
  - 1 vs 2 photon separation power
  - position resolution
  - noise rate
- 1 and 2 ph emission rates from UR (convolved with QE)
- Coarse spatial distribution of UR cone
- ACDC/PSEC4 trigger efficiency (if time)

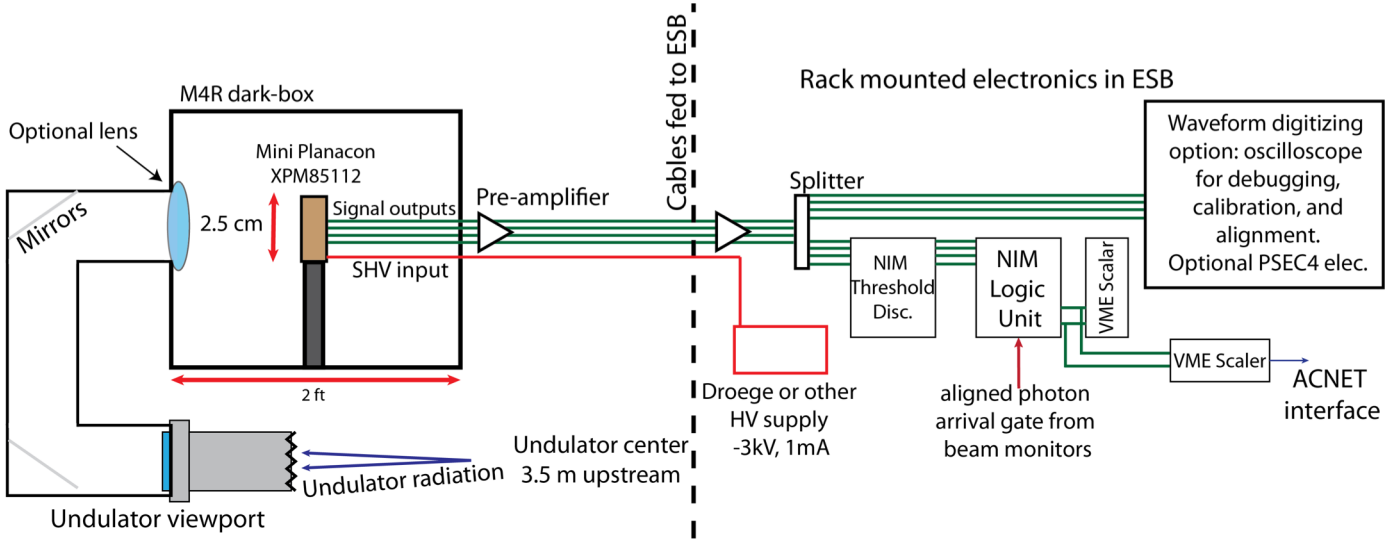

Draft shift plan

Beam:

- Electron
- Single electron with occasional “low intensity” (100-10^4) electron
- Transverse size can be comfortably large for this phase, < 3mm. Measurement of size will improve angular measurement in next phase
- Central orbit to maximize lifetime

Requesting 1-2 x 8 hour shifts per week as is convenient for other experiments

Plan for individual shifts:

- **Shift 1:** Beam in low intensity mode to start. Oscilloscope based DAQ. Calibrate trigger alignment and expected arrival time of photons. Switch to single electron mode. Adjust post-amplification, pre-amplification, and NIM discrimination thresholds based on amplitudes measured by the oscilloscope. Record a small dataset with oscilloscope.
- Interim or just before shift 2: adjust position of Planacon to maximize spot size based on data analyzed from shift 1. Adjust amplifiers if needed.
- **Shift 2:** Single electron mode. Take one hour of oscilloscope data and one hour of NIM discriminated data. Compare rates and efficiencies to make sure that thresholds and logic is in agreement with oscilloscope data.
- **Shift 3:** Briefly start in low intensity mode to confirm consistency. Then 7 hours of single electron mode data recording rates with the NIM and scaler DAQ. One hour at the end of oscilloscope recorded data.
- **Shift 4:** Single electron mode. 7 hours of data recording rates with the NIM and scaler DAQ. One hour at the end of oscilloscope recorded data.
- If allotted additional shifts, repeat the plans for shifts 2-4.