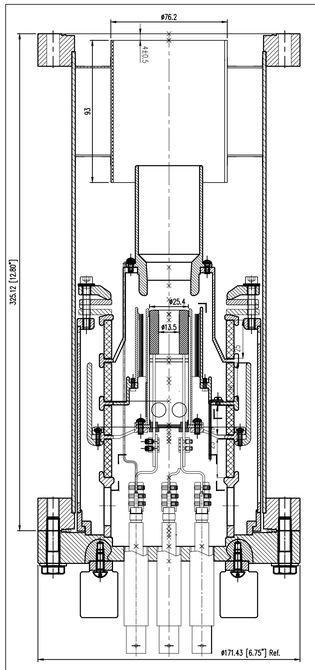

12TEL00
Gun (SEFT)
2011/04/06

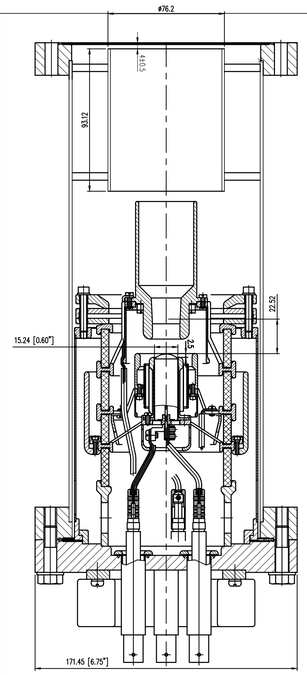

5TEL020100
Gun (SEFT)-Tevatron
2004/11/02__Gun5-1m__SEFT

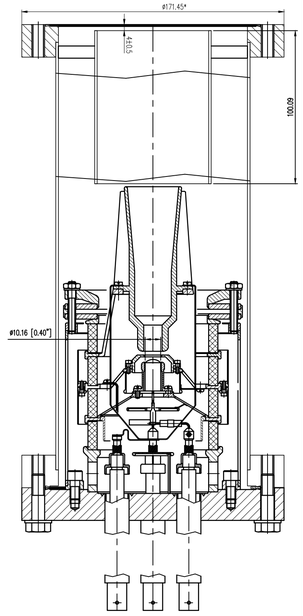

TEL0200
Gun- Gaussian. Test Stand.
2002/07/15__Gun4

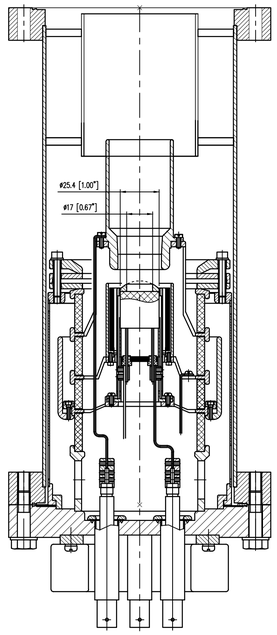

9TEL020100
Gun (Inch Gun)
2004__11__02__Gun__Inch

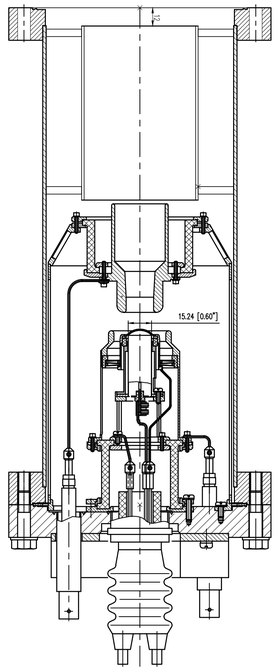

8TEL020100
Gun
2007__05__22__6Ring

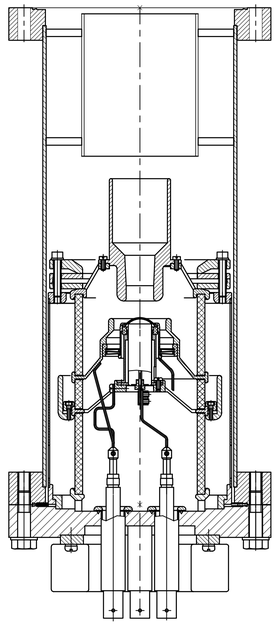

7TEL020100
Gun
2007__07__12__ModerG7

After removing a 05TEL020100 gun from its place at TEL2, another gun 12TEL00 has to be installed at the same nipple without any disturbance.

FILE NAME FC010100_Guns_Compatibility	FSCM NO	SHEET 1	SCALE 1:1
SIZE A2x4	FERMI NATIONAL ACCELERATOR LABORATORY UNITED STATES DEPARTMENT OF ENERGY		
DRAWN 08/22/2011 A. Didenko			
CHECK	TEL2 to CERN		
APPR.	12TEL00_5TEL020100_Guns_Compatibility		
ISSUED			
REV		DWG NO FC010100	
CONTRACT NO			