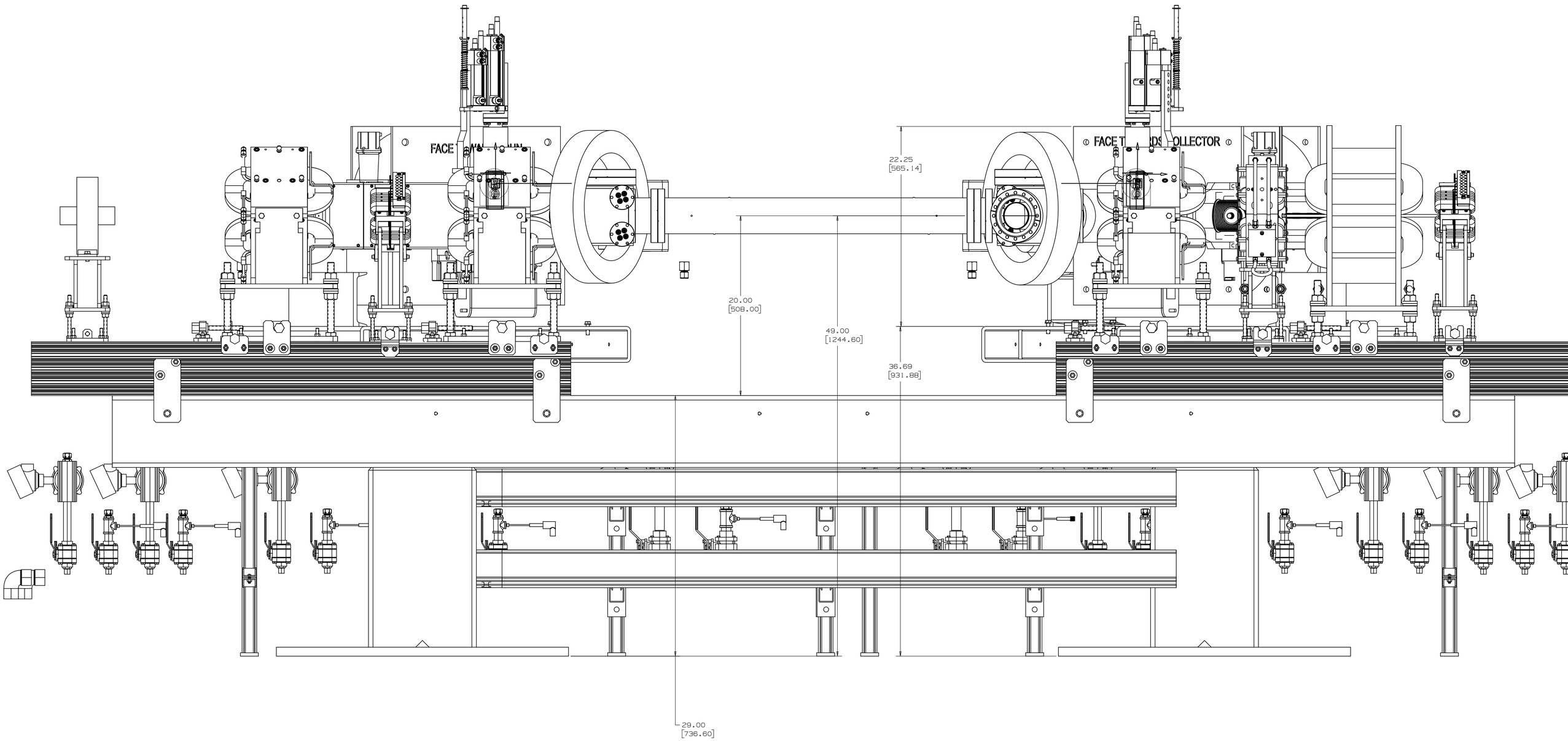
22.25
[565.14]
20.00
[508.00]
49.00
[1244.60]
36.69
[931.88]
29.00
[736.60]