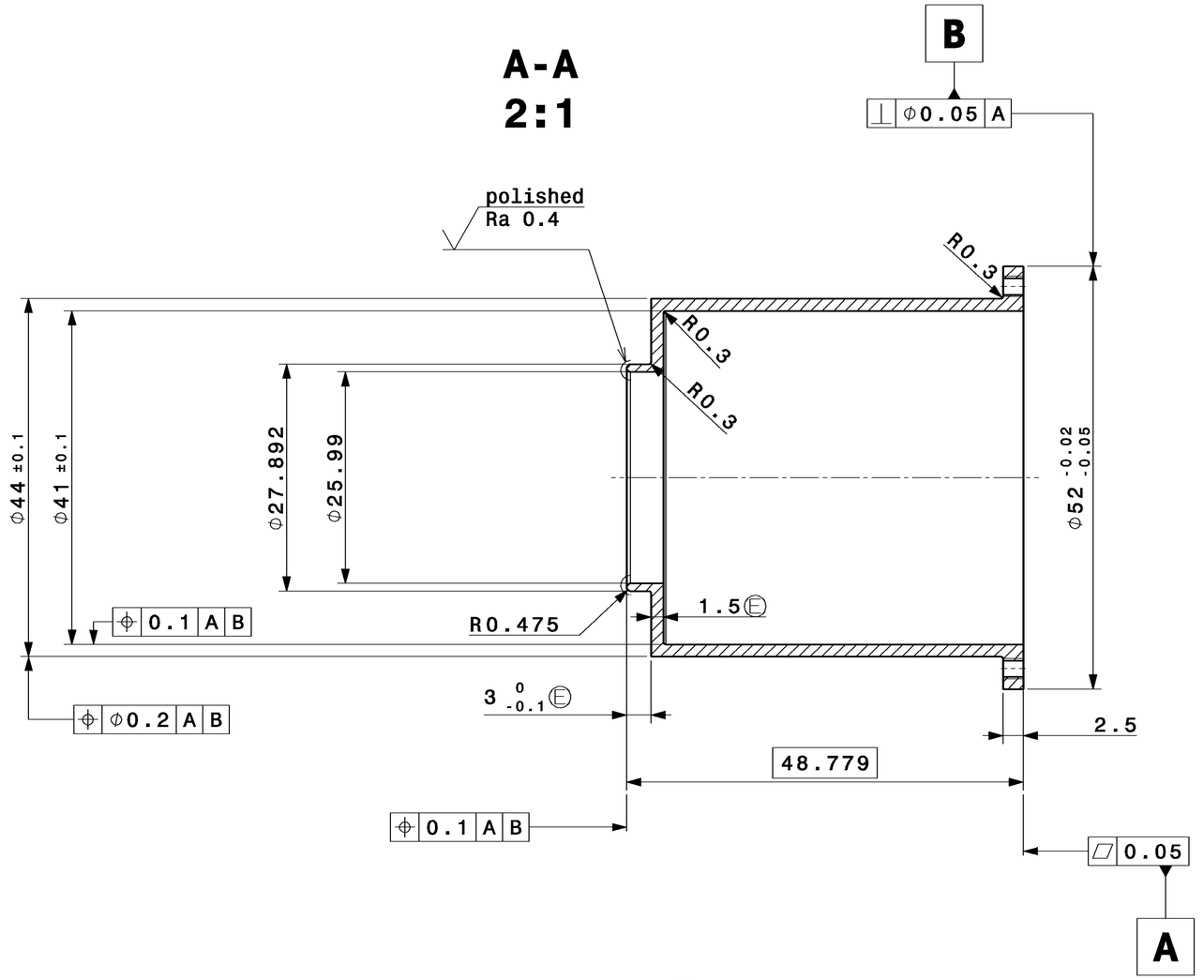

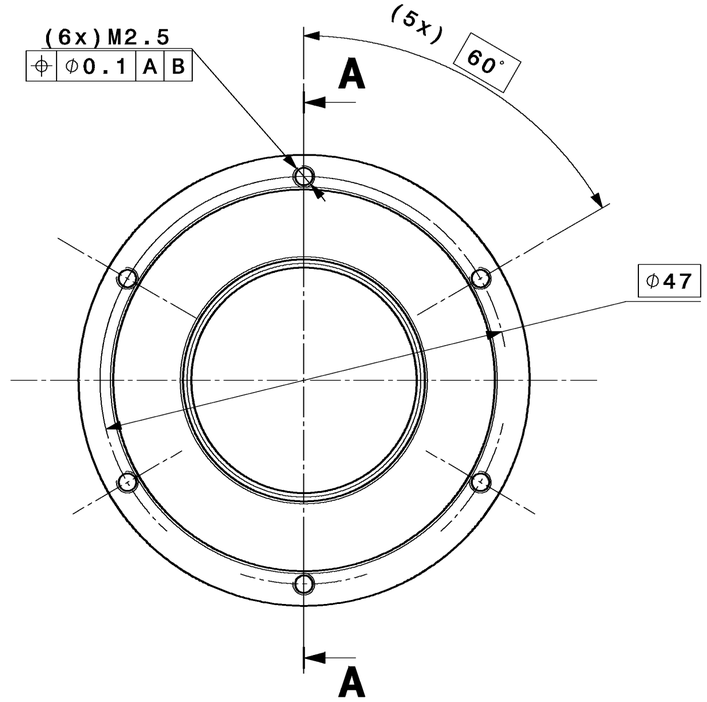

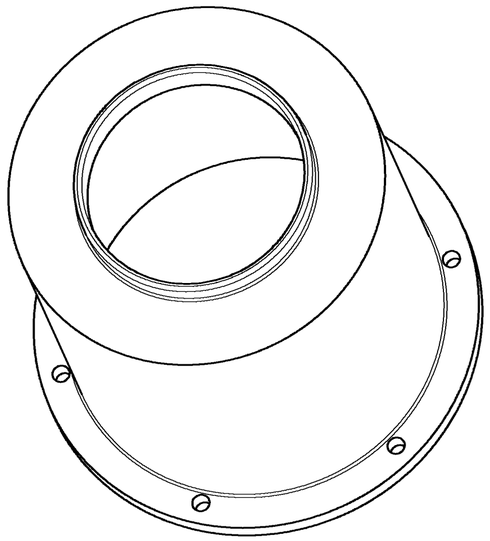

NOTA:
MASS: 96 g

UNLESS OTHERWISE MENTIONED, APPLICABLE ISO GPS STANDARDS ARE THOSE PRIOR TO 2010-08-01 REGARDLESS OF THE DRAWING DATE

QUA	DESCRIPTION	POS	MAT.	OBSERVATIONS	REF.CERN
1		1	EN 1.4404 (St. Steel 316L)		

ENS/ASS | S.ENS/S.ASS

ISO 2768-mK | Ra 1.6 | ISO 13715 -0.3 +0.3

Particle source, Electron Cooler Gun, Prototype

HL-LHC WP5 - E-GUN
CONTROL ELECTRODE

SCALE 1:1

DES/DRA.	A.KOLEHMAINEN	2017-05-10
CONTROLLED	D.STEYAERT	2017-10-06
RELEASED	D.PERINI	2017-10-09
APPROVED		

CAD Document Number ST0844644_02
REPLACES

RELEASED BY PROJECT ENGINEER | FOR INFORMATION | QAC – | LHCNECGP0084 | SIZE 2 | IND.

DESSIN, RUGOSITE, TOLERANCES SELON NORMES ISO
DRAWING, RUGOSITY, TOLERANCES ACCORDING TO ISO STANDARDS

PROJECTION

ORGANISATION EUROPEENNE POUR LA RECHERCHE NUCLEAIRE
EUROPEAN ORGANIZATION FOR NUCLEAR RESEARCH
GENEVE
Ce dessin ne peut etre utilise a des fins commerciales sans autorisation ecrite
This drawing may not be used for commercial purposes without written authorisation