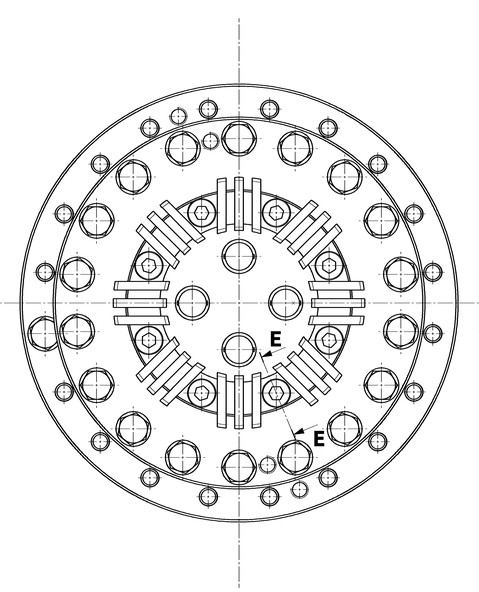

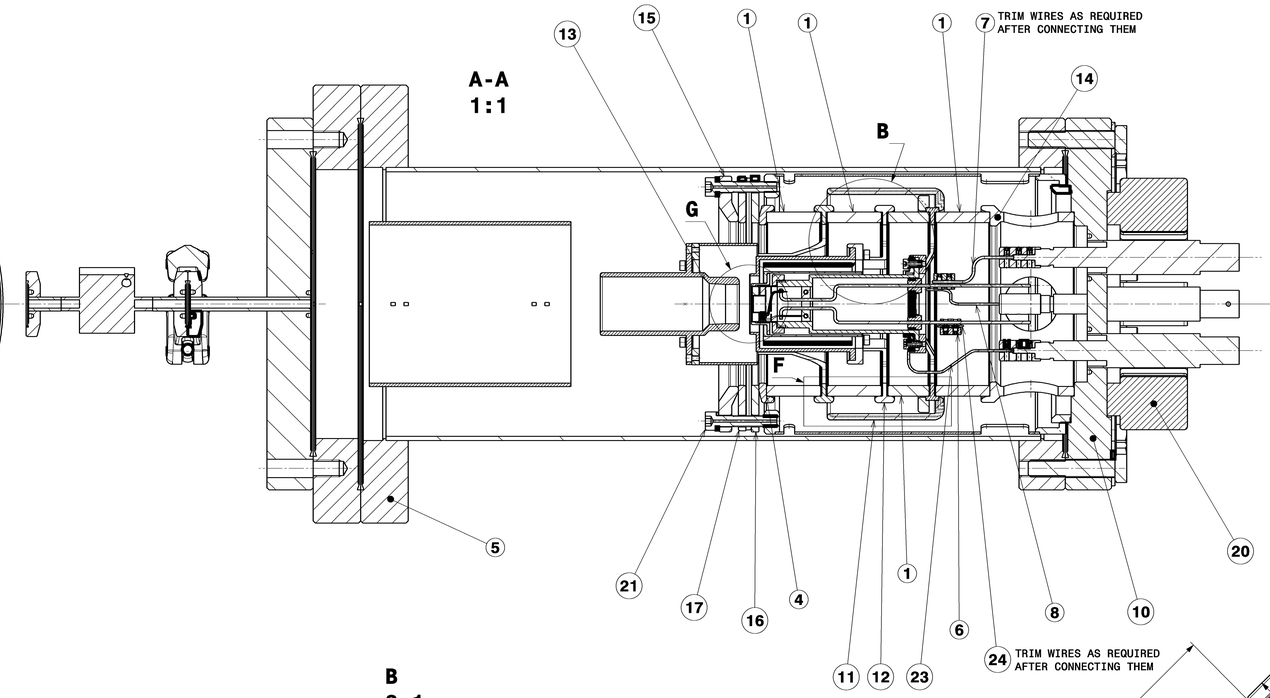

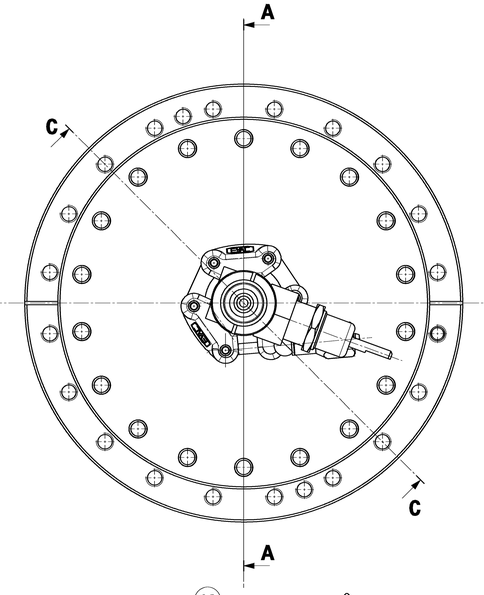

Isometric view

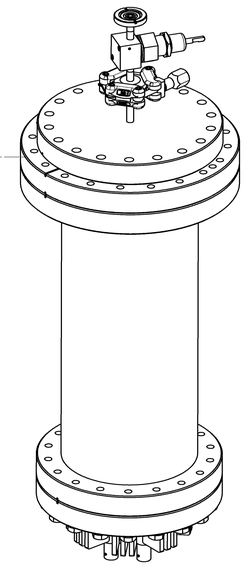

F
4:1

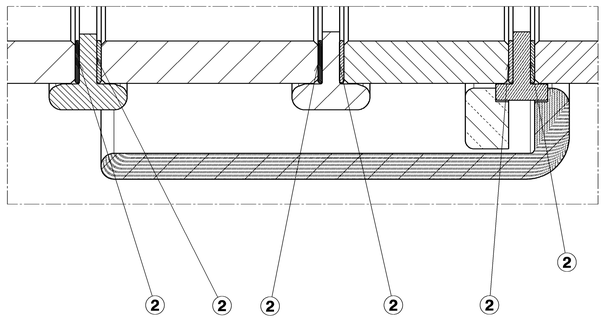

B
3:1

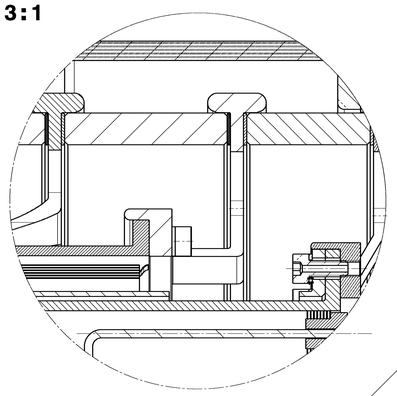

C-C
1:1

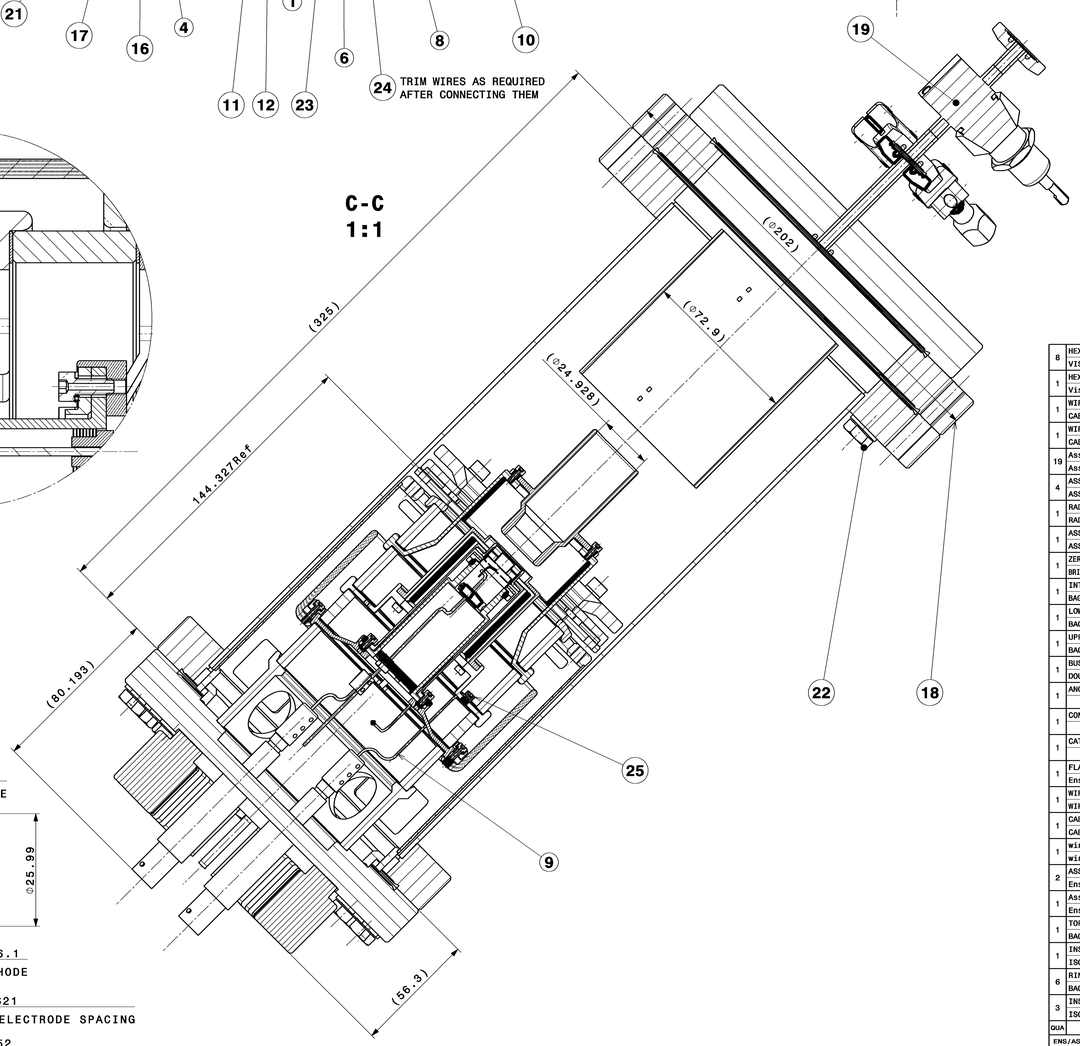

E-E
2:1

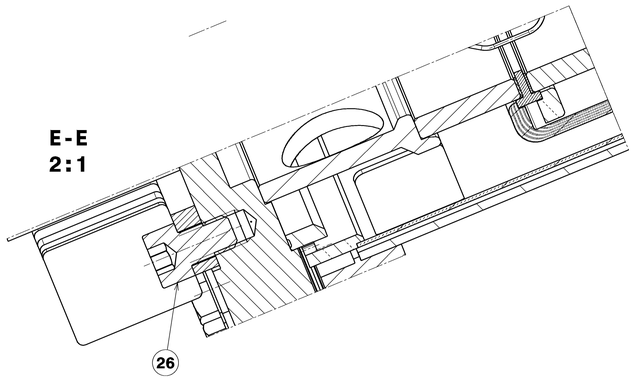

G
2:1

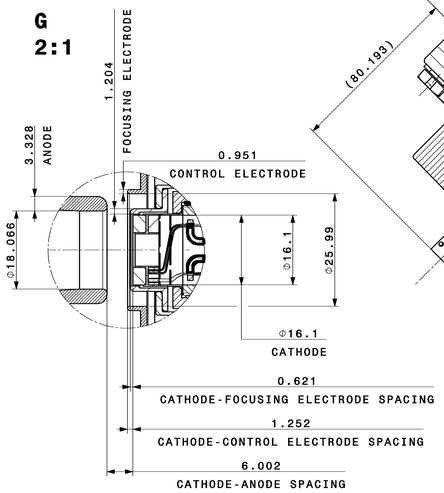

QUA	DESCRIPTION	POS	MAT.	OBSERVATIONS	REF.CERN
8	HEX SKT HD CAP SCREW_M8X12 VIS CHC_M8X12	26	Steel 8.8	ISO 4762_M8x12-8.8-A0C Zingue, jaune dichromate | Zn yellow dichr	
1	HEX SKT HD cap screw_M2.5x3 Vis CHC_M2.5x3	25	St. Steel A4	ST0690516	
1	WIRE CABLE	24		ST0692668	
1	WIRE CABLE	23		ST0692486	
19	Assy M8 x 40 Assy M8 x 40	22		LHCNECGP0014 ST0684652	
4	ASSy M5 VENTED ASSy M5 VENTED	21		LHCNECGP0013 ST0663081	
1	RADIATOR RADIATEUR	20	Alu EN AW-1050 (H24)	LHCNECGP0017 ST0681929	
1	ASSy TRANSPORT FLANGE ASSy TRANSPORT FLANGE	19		LHCNECGP0071 ST0726233	
1	ZERO LENGTH DN160 CF - CF US BRIDE ADAPTATION DN160 - CF US	18	EN 1.4429 EERN 30F EN6 70075 (316LN)	LHCNECGP0068 ST0695235	
1	INTERMEDIATE SUPPORT RING BAGUE D'APPUI INTERMEDIAIRE	17	EN 1.4404 (St. Steel 316L)	LHCNECGP0065 ST0660803	
1	LOWER SUPPORT RING BAGUE D'APPUI INFERIEURE	16	EN 1.4404 (St. Steel 316L)	LHCNECGP0064 ST0660802	
1	UPPER SUPPORT RING BAGUE D'APPUI SUPERIEURE	15	EN 1.4404 (St. Steel 316L)	LHCNECGP0063 ST0660804	
1	BUSHING DOUILLE	14	Cu OFE C10100 (H02)	LHCNECGP0062 ST0660793	
1	ANODE ASSEMBLY	13		LHCNECGP0078 ST0844607	
1	CONTROL ELECTRODE ASSY	12		LHCNECGP0077 ST0844606	
1	CATHODE ASSEMBLY	11		LHCNECGP0076 ST0843459	
1	FLANGE ASSy Ens BRIDE	10		LHCNECGP0004 ST0672391	
1	WIRE WIRE	9		LHCNECGP0034 ST0663306	
1	CABLE CABLE	8		LHCNECGP0035 ST0663290	
1	wire 1 wire 1	7		LHCNECGP0039 ST0663134	
2	ASSy CONNECTOR Ens CONNECTEUR	6		LHCNECGP0047 ST0687994	
1	Assy CHAMBER Ens CHAMBRE	5		LHCNECGP0002 ST0660817	
1	TOP INSULATOR RING BAGUE SUP ISOLANT	4	Cu OFE C10100 (H02)	LHCNECGP0067 ST0692091	
1	INSULATOR TYPE B ISOLANT TYPE B	3		LHCNECGP0044 ST0660798	
6	RING BAGUE	2	Cu OFE C10100 (H02)	LHCNECGP0043 ST0660795	
3	INSULATOR TYPE A ISOLANT TYPE A	1		LHCNECGP0042 ST0660794	

ENS/ASS — S.ENS/S.ASS

Particle source, Electron Cooler Gun, Prototype

HL-LHC-WP5
ELECTRON GUN 16mm CATHODE
E- GUN

DES/DRA.	A. KOLEHMAINEN	2017-08-30
CONTROLLED	D. STEYAERT	2017-11-22
RELEASED	D. PERINI	2017-11-30
APPROVED		

SCALE 1:1

CAD Document Number ST0844598_02

REPLACES

RELEASED BY PROJECT ENGINEER — FOR INFORMATION — SHEET – — LHCNECGP0075 — SIZE 0 — IND. A

IND.	DATE	NOM/NAME	ZONE	MODIFICATION
A	2017-11-14	A. KOLEHMAINEN		CATHODE ASSEMBLY UPDATED

DESSIN NON CONTRACTUEL
DRAWING NON CONTRACTUAL
DIMENSIONS ACCORDING TO ISO STANDARDS

PROJECTION

ORGANISATION EUROPEENNE POUR LA RECHERCHE NUCLEAIRE
EUROPEAN ORGANIZATION FOR NUCLEAR RESEARCH
CERN CH

CE DOCUMENT EST LA PROPRIETE DU CERN. IL NE PEUT ETRE REPRODUIT OU COMMUNIQUE SANS AUTORISATION ECRITE DU CERN
THIS DOCUMENT IS THE PROPERTY OF CERN. IT MAY NOT BE REPRODUCED OR COMMUNICATED WITHOUT WRITTEN AUTHORISATION