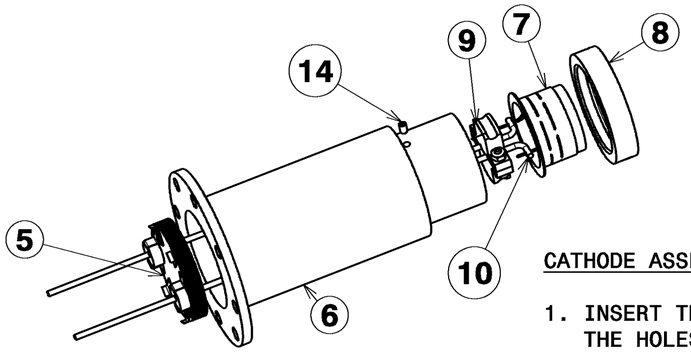

CATHODE ASSEMBLY:

1. INSERT THE CATHODE WIRE PAIRS INTO THE HOLES OF THE COPPER WIRES, POS. 10
2. SECURE THE CATHODE WIRES BY COMPRESSING THE COPPER WIRE.
   TRIM CATHODE WIRES AS REQUIRED.
   INSERT THE CONNECTOR HALVES AROUND THE COPPER WIRES AND CLOSE THE CONNECTOR WITH HARDWARE.
3. INSERT THE ASSEMBLY INTO THE CATHODE SUPPORT, POS. 6. SECURE THE CONNECTOR WITH SET SCREW, POS. 14
4. SECURE THE CATHODE ASSEMBLY, POS. 7, WITH NUT, POS. 8
5. INSERT THE HEALD SHIELD, POS. 5. LEAVE THE COPPER WIRES UN-CUT AND TRIM THEM LATER AS INDICATED IN THE FULL ASSEMBLY LHCNECGP0075

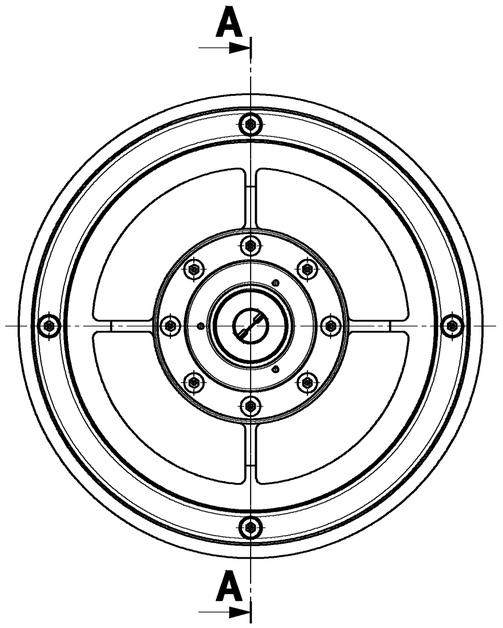

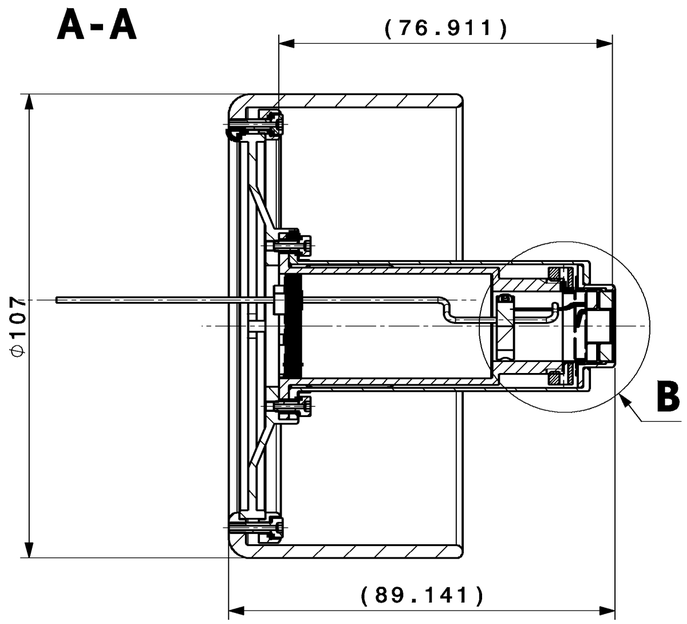

MASS: 845 g

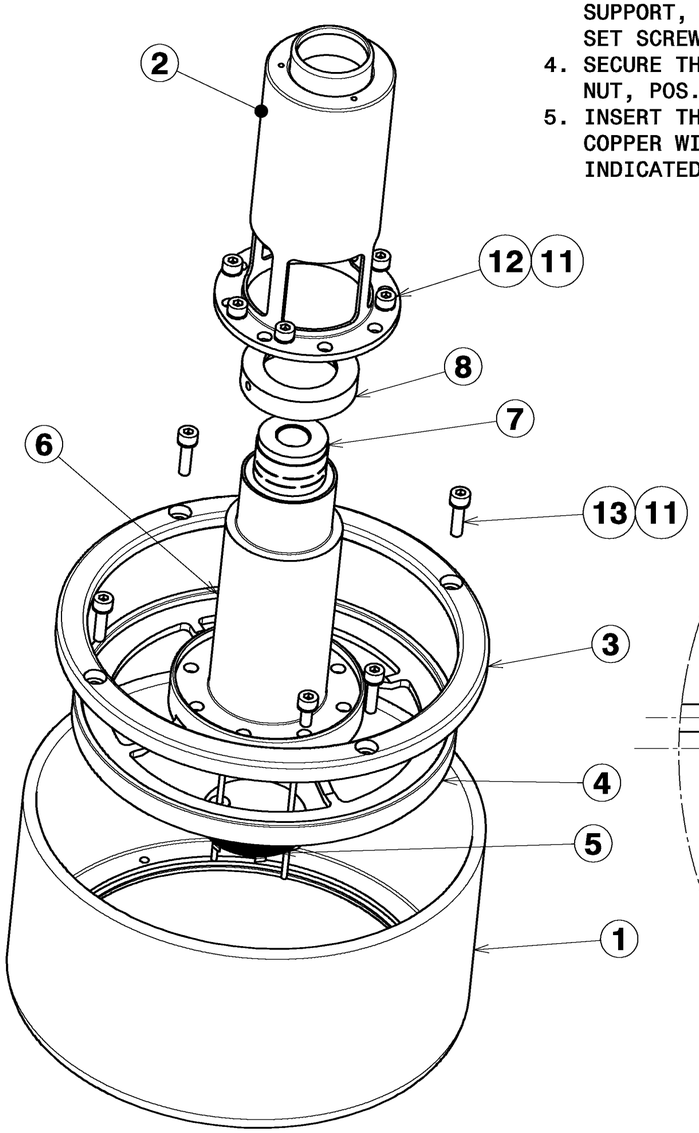

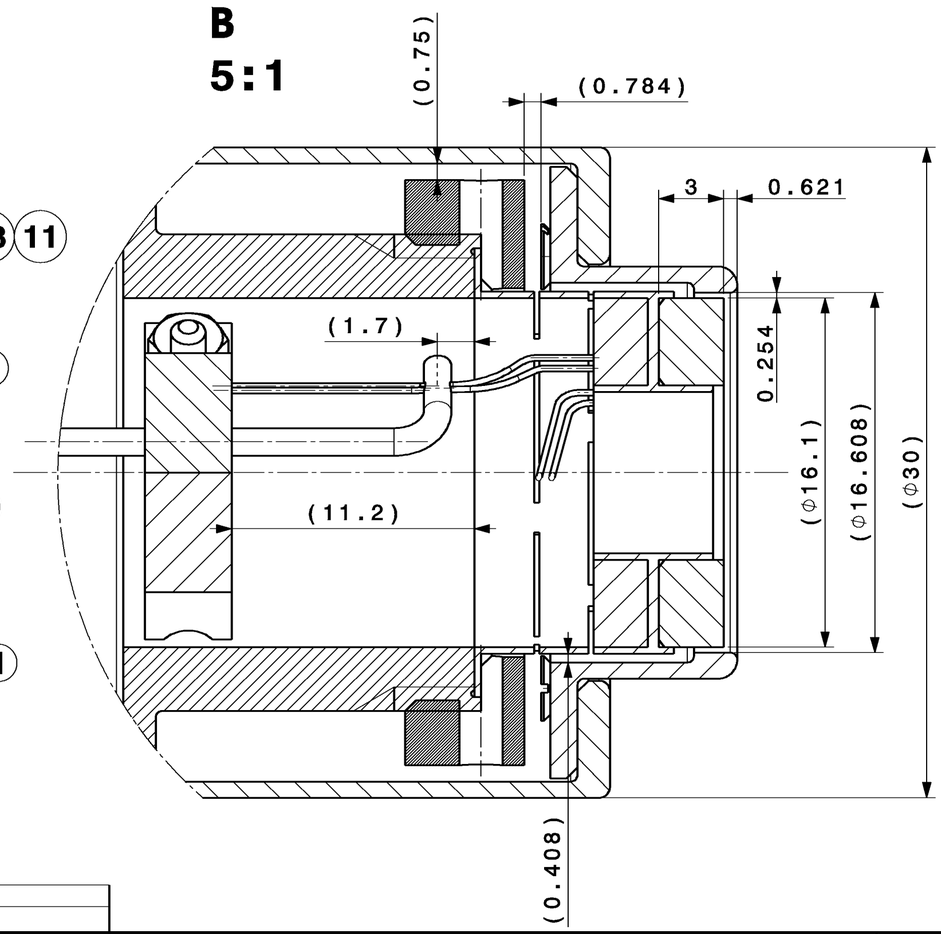

QUA	DESCRIPTION	POS	MAT.	OBSERVATIONS	REF.CERN
1	HEX SKT CN PT set screw_M1.6x3 Vis SS TET 6PC BT TRONC_M1.6x3	14	Steel	ISO 4027_M1.6x3-St-Bk Traité, noirci | Black finish	
4	Vis CHC_M2.5x10 VENTED Vis CHC_M2.5x10 VENTED	13	St. Steel A4	 ST0663111	
8	HEX SKT HD cap screw_M2.5x6 VENTE Vis CHC_M2.5x6 VENTED	12	St. Steel A4	 ST0663101	
12	Normal PL washer_2.5 VENTED Normal PL washer_2.5 VENTED	11		 ST0663106	
2	WIRE Ø1.27 CABLE Ø1.27	10	Cu OFE C10100 (H02)	LHCNECGP0091 ST0861062	
1	EGUN INNER WIRE CONNECTOR ROUND CONNECTEUR CABLE	9		LHCNECGP0089 ST0858715	
1	LOCKING NUT NOIX BLOCAGE	8	EN 1.4404 (St. Steel 316L)	LHCNECGP0082 ST0844138	
1	CATHODE 16.1mm ASSEMBLY ENSEMBLE CATHODE	7		LHCNECGP0088 ST0860519	
1	CATHODE SUPPORT SUPPORT CATHODE	6	EN 1.4404 (St. Steel 316L)	LHCNECGP0081 ST0844081	
1	SHIELD ASSy SHIELD ASSy	5		LHCNECGP0016 ST0662400	
1	SUPPORT SUPPORT	4	EN 1.4435 (St. Steel 316L)	LHCNECGP0055 ST0660797	
1	SHIELD CLAMP CLAMP BLINDAGE	3	Cu OFE C10100 (H02)	LHCNECGP0054 ST0660812	
1	FOCUSING ELECTRODE ASSEMBLY	2		LHCNECGP0092 ST0906227	
1	SHIELD ECRAN	1	Cu OFE C10100 (H02)	LHCNECGP0051 ST0660811	

ENS/ASS | S.ENS/S.ASS

Particle source, Electron Cooler Gun, Prototype

HL-LHC WP5 - E-GUN CATHODE ASSEMBLY

SCALE 1:1

DES/DRA.	A.KOLEHMAINEN	2017-09-21
CONTROLLED	D.STEYAERT	2017-11-22
RELEASED	D.PERINI	2017-11-30
APPROVED		

CAD Document Number ST0843459_02

REPLACES

RELEASED BY PROJECT ENGINEER | FOR INFORMATION | GAC – | LHCNECGP0076 | SIZE 2 | IND. A

IND.	DATE	NOM/NAME	ZONE	MODIFICATION
A	2017-11-14	A. KOLEHMAINEN		CHANGED FOCUS ELECTRODE

ORGANISATION EUROPEENNE POUR LA RECHERCHE NUCLEAIRE
EUROPEAN ORGANIZATION FOR NUCLEAR RESEARCH
GENEVE
Ce dessin ne peut etre utilise a des fins commerciales sans autorisation ecrite
This drawing may not be used for commercial purposes without written authorisation

DESSIN RUGOSITE TOLERANCES SELON NORMES ISO
DRAWING RUGOSITY TOLERANCES ACCORDING TO ISO STANDARDS
PROJECTION