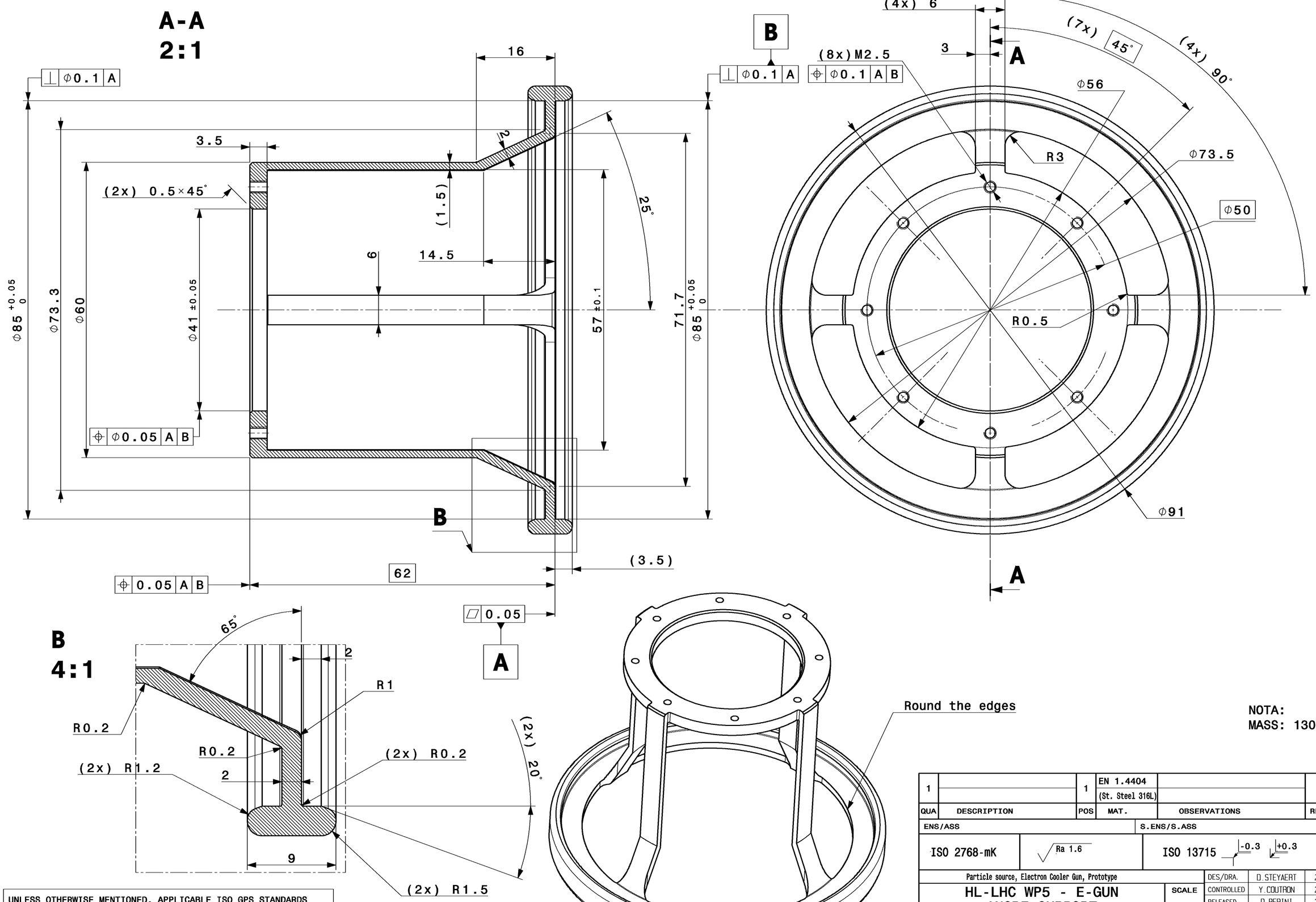

NOTA:
MASS: 130gr

UNLESS OTHERWISE MENTIONED, APPLICABLE ISO GPS STANDARDS ARE THOSE PRIOR TO 2010-08-01 REGARDLESS OF THE DRAWING DATE

QUA	DESCRIPTION	POS	MAT.	OBSERVATIONS	REF.CERN
		1	EN 1.4404 (St. Steel 316L)		

ENS/ASS | S.ENS/S.ASS

ISO 2768-mK | Ra 1.6 | ISO 13715 -0.3 +0.3

Particle source, Electron Cooler Gun, Prototype

HL-LHC WP5 - E-GUN ANODE SUPPORT

SUPPORT ANODE

DES/DRA.	D.STEYAERT	2015-06-15
CONTROLLED	Y.COUTRON	2016-10-05
RELEASED	D.PERINI	2016-10-10
APPROVED		

SCALE 1:1

CAD Document Number ST0660800_02

REPLACES

RELEASED BY PROJECT ENGINEER | FOR INFORMATION | GAC – | LHCNECGP0061 | SIZE 2 | IND. A

IND.	DATE	NOM/NAME	ZONE	MODIFICATION
A	2015-12-10	D. STEYAERT	h4	Change M5 to M2.5

DESSIN, RUGOSITE, TOLERANCES SELON NORMES ISO
DRAWING, RUGOSITY, TOLERANCES ACCORDING TO ISO STANDARDS

PROJECTION

ORGANISATION EUROPEENNE POUR LA RECHERCHE NUCLEAIRE
EUROPEAN ORGANIZATION FOR NUCLEAR RESEARCH
GENEVE

Ce dessin ne peut être utilisé à des fins commerciales sans autorisation écrite
This drawing may not be used for commercial purposes without written authorisation