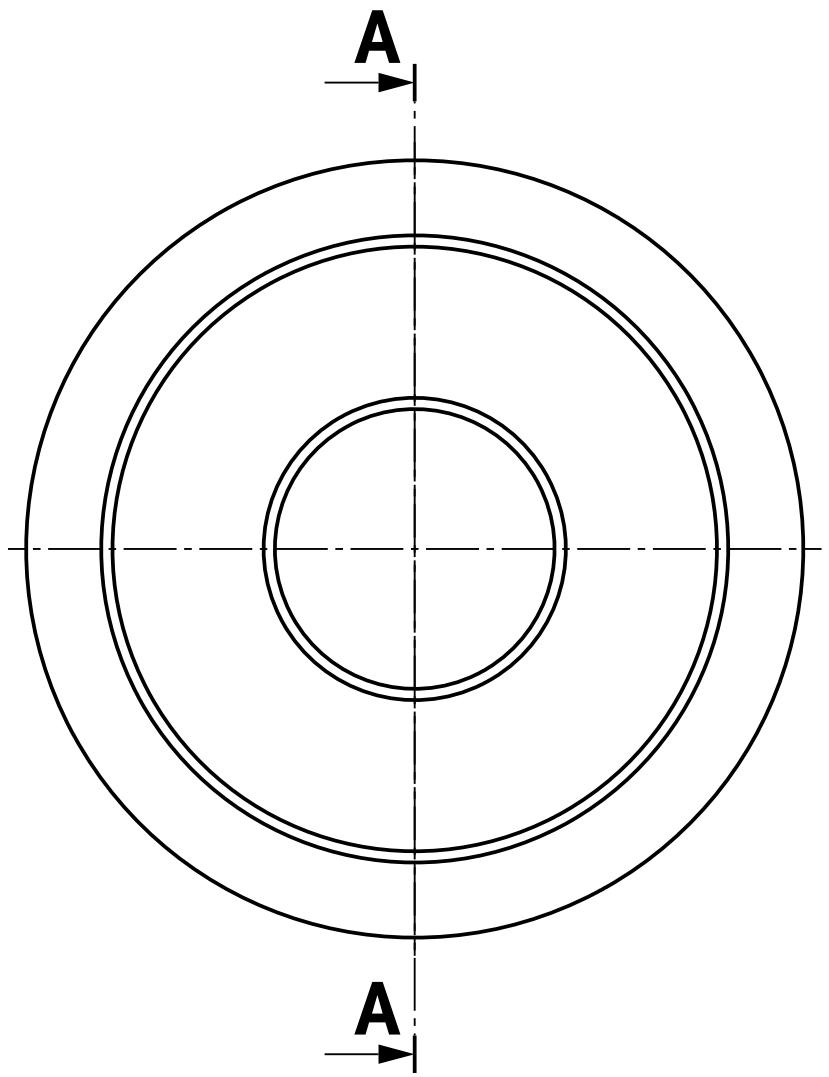

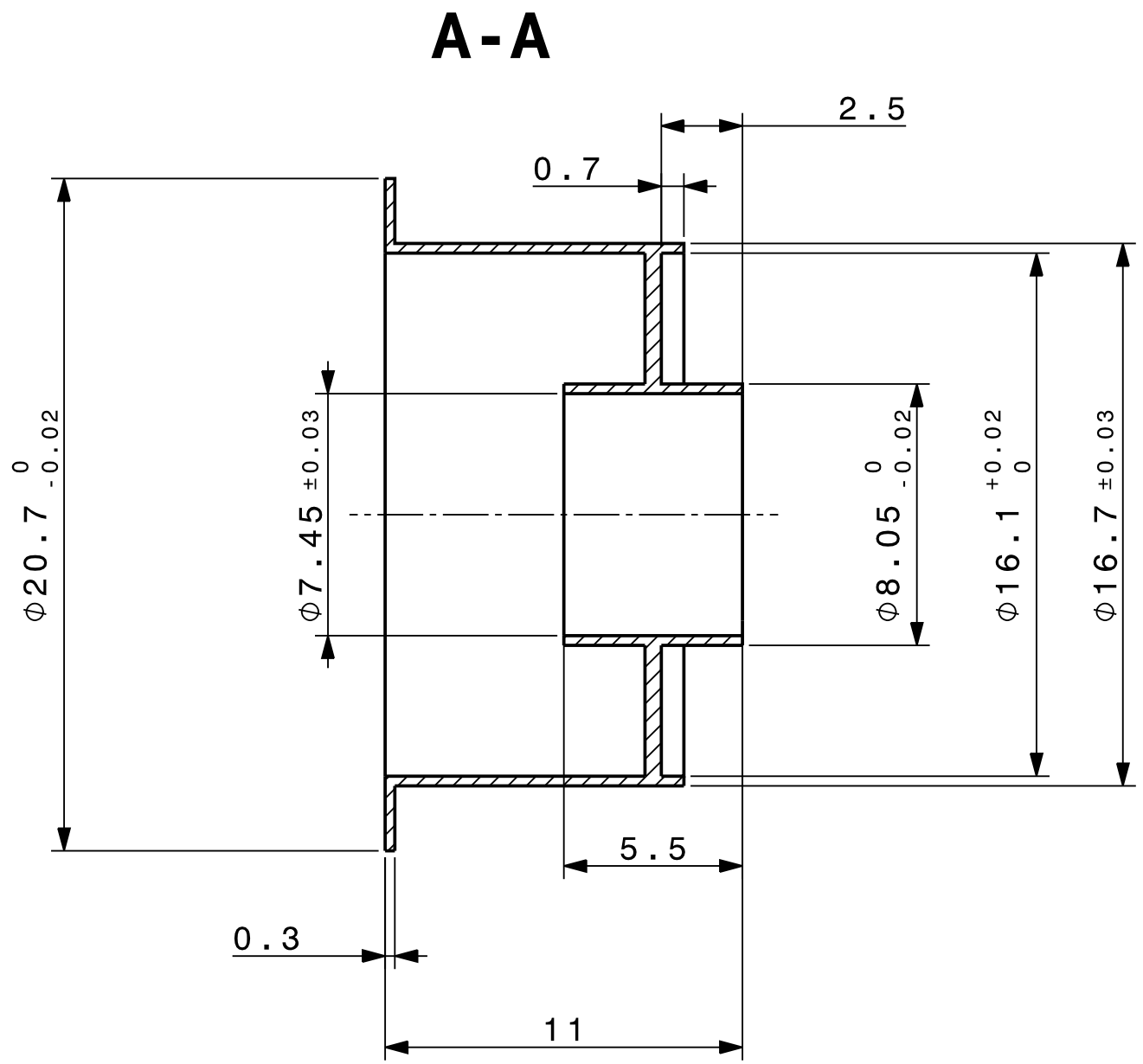

MASS: 3 g

UNLESS OTHERWISE MENTIONED, APPLICABLE ISO GPS STANDARDS ARE THOSE PRIOR TO 2010-08-01 REGARDLESS OF THE DRAWING DATE

QUA	DESCRIPTION	POS	MAT.	OBSERVATIONS	REF.CERN
1		1	Molybdenum		

ENS/ASS | S.ENS/S.ASS

ISO 2768-fH | Ra 0.8 | ISO 13715 -0.02 -0.05 | +0.02 0

DRAWN	A. Kolehmainen	2017-03-21
CONTROLLED		
RELEASED		
APPROVED		
CAD Document Number	ST0838192_02	
REPLACES		

CATHODE SUPPORT

SCALE 5:1

NON VALABLE POUR EXECUTION
NOT VALID FOR EXECUTION

QAC -

SIZE 3 IND.

DESSIN, RUGOSITE, TOLERANCES SELON NORMES ISO
DRAWING, RUGOSITY, TOLERANCES ACCORDING TO ISO STANDARDS

PROJECTION

ORGANISATION EUROPEENNE POUR LA RECHERCHE NUCLEAIRE
EUROPEAN ORGANIZATION FOR NUCLEAR RESEARCH
GENEVE

Ce dessin ne peut etre utilise a des fins commerciales sans autorisation ecrite
This drawing may not be used for commercial purposes without written authorisation