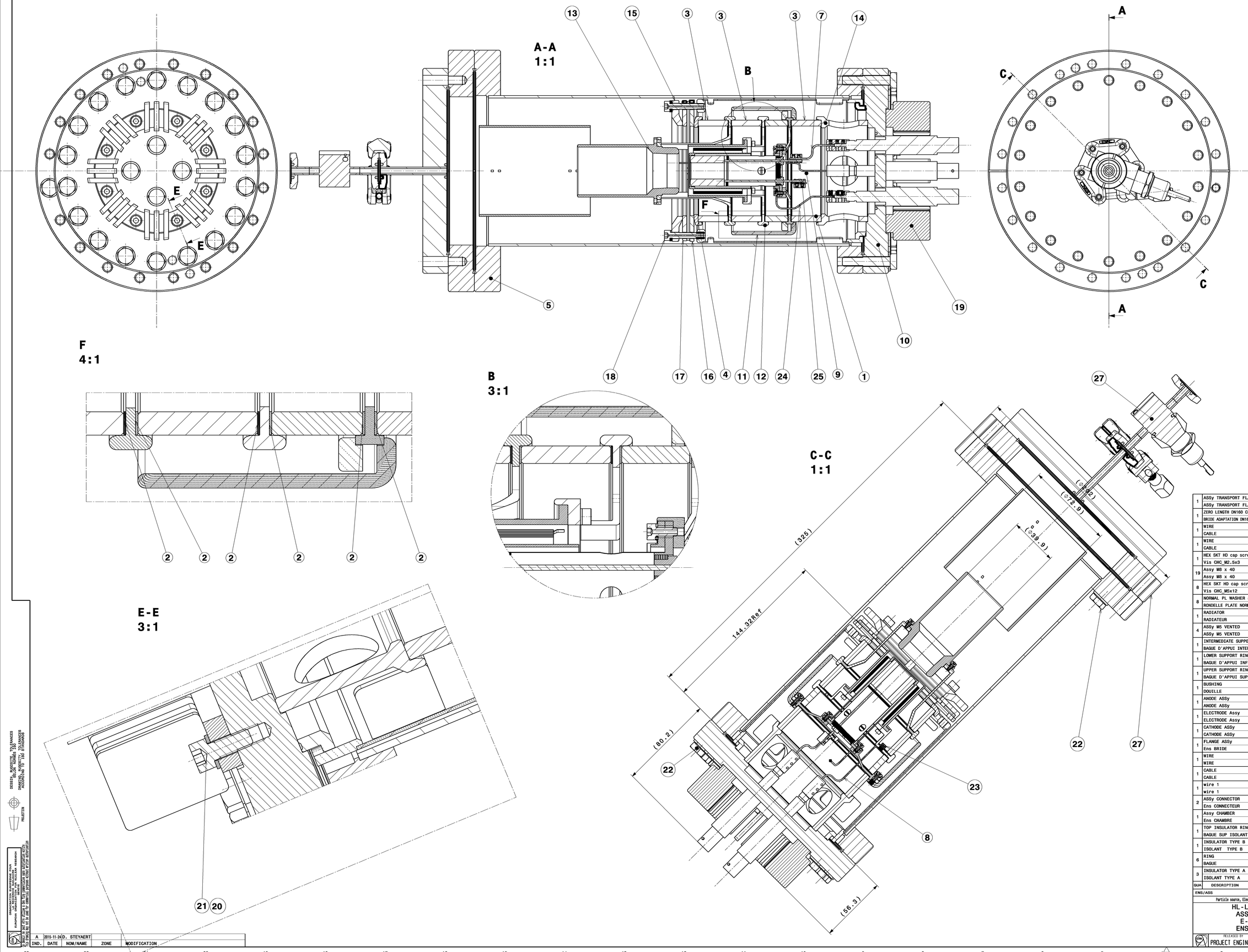

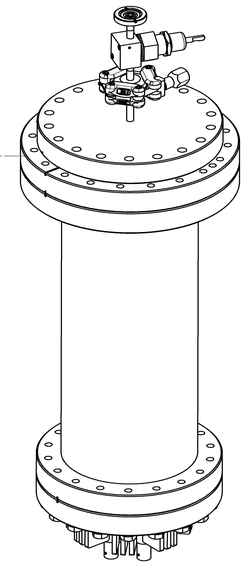

QUA	DESCRIPTION	POS	MAT.	OBSERVATIONS	REF.CERN
1	ASSy TRANSPORT FLANGE ASSy TRANSPORT FLANGE	27		LHCNECGP0071 ST0726233	
1	ZERO LENGTH DN160 CF - CF US BRIDE ADAPTATION DN160 - CF US	26	EN 1.4429 CERN 30P EDMS 790775 (316LN)	LHCNECGP0068 ST0695235	
1	WIRE CABLE	25		 ST0692668	
1	WIRE CABLE	24		 ST0692486	
1	HEX SKT HD cap screw_M2.5x3 Vis CHC_M2.5x3	23	St. Steel A4	 ST0690516	
19	Assy M8 x 40 Assy M8 x 40	22		LHCNECGP0014 ST0684652	
8	HEX SKT HD cap screw_M5x12 Vis CHC_M5x12	21	St. Steel A4	 ST0682510	
8	NORMAL PL WASHER 5X10 RONDELLE PLATE NORMALE 5X10	20	Stainless Steel A4 Acier Inox A4	ISO 7089_5x10-A4 	47.78.15 005.1
1	RADIATOR RADIATEUR	19	Alu EN AW-1050 (H24)	LHCNECGP0017 ST0681929	
4	ASSy M5 VENTED ASSy M5 VENTED	18		LHCNECGP0013 ST0663081	
1	INTERMEDIATE SUPPORT RING BAGUE D'APPUI INTERMEDIAIRE	17	EN 1.4404 (St. Steel 316L)	LHCNECGP0065 ST0660803	
1	LOWER SUPPORT RING BAGUE D'APPUI INFERIEURE	16	EN 1.4404 (St. Steel 316L)	LHCNECGP0064 ST0660802	
1	UPPER SUPPORT RING BAGUE D'APPUI SUPERIEURE	15	EN 1.4404 (St. Steel 316L)	LHCNECGP0063 ST0660804	
1	BUSHING DOUILLE	14	Cu OFE C10100 (H02)	LHCNECGP0062 ST0660793	
1	ANODE ASSy ANODE ASSy	13		LHCNECGP0007 ST0672445	
1	ELECTRODE Assy ELECTRODE Assy	12		LHCNECGP0006 ST0672438	
1	CATHODE ASSy CATHODE ASSy	11		LHCNECGP0005 ST0672396	
1	FLANGE ASSy Ens BRIDE	10		LHCNECGP0004 ST0672391	
1	WIRE WIRE	9		LHCNECGP0034 ST0663306	
1	CABLE CABLE	8		LHCNECGP0035 ST0663290	
1	wire 1 wire 1	7		LHCNECGP0039 ST0663134	
2	ASSy CONNECTOR Ens CONNECTEUR	6		LHCNECGP0047 ST0687994	
1	Assy CHAMBER Ens CHAMBRE	5		LHCNECGP0002 ST0660817	
1	TOP INSULATOR RING BAGUE SUP ISOLANT	4	Cu OFE C10100 (H02)	LHCNECGP0067 ST0692091	
1	INSULATOR TYPE B ISOLANT TYPE B	3		LHCNECGP0044 ST0660798	
6	RING BAGUE	2	Cu OFE C10100 (H02)	LHCNECGP0043 ST0660795	
3	INSULATOR TYPE A ISOLANT TYPE A	1		LHCNECGP0042 ST0660794	

ENS/ASS — S.ENS/S.ASS

Particle source, Electron Cooler Gun, Prototype

DES/DRA.	D. STEYAERT	2015-07-17
CONTROLLED	E. CHAUBET	2015-11-27
RELEASED	D. PERINI	2015-12-02
APPROVED		

HL-LHC-WP5
ASSEMBLY
E- GUN
ENSEMBLE

SCALE 3:2

CAD Document Number ST0660791_02

REPLACES

RELEASED BY PROJECT ENGINEER — FOR INFORMATION — QUAL. – — LHCNECGP0001 — SIZE 0 — IND. A

IND.	DATE	NOM/NAME	ZONE	MODIFICATION
A	2015-11-24	D. STEYAERT		

DESSIN NON MODIFIE, TOLERANCES ACCORDING TO ISO 2768/MGNC
DRAWING UNMODIFIED, TOLERANCES ACCORDING TO ISO 2768/MGNC

REALISATION

ORGANISATION INTERNATIONALE POUR LA RECHERCHE NUCLEAIRE
CERN
CH-1211 GENEVE 23 (SUISSE)
ORGANISATION EUROPEENNE POUR LA RECHERCHE NUCLEAIRE
CERN
CH-1211 GENEVE 23 (SUISSE)

CERN