USB-RS422 + Power wiring:

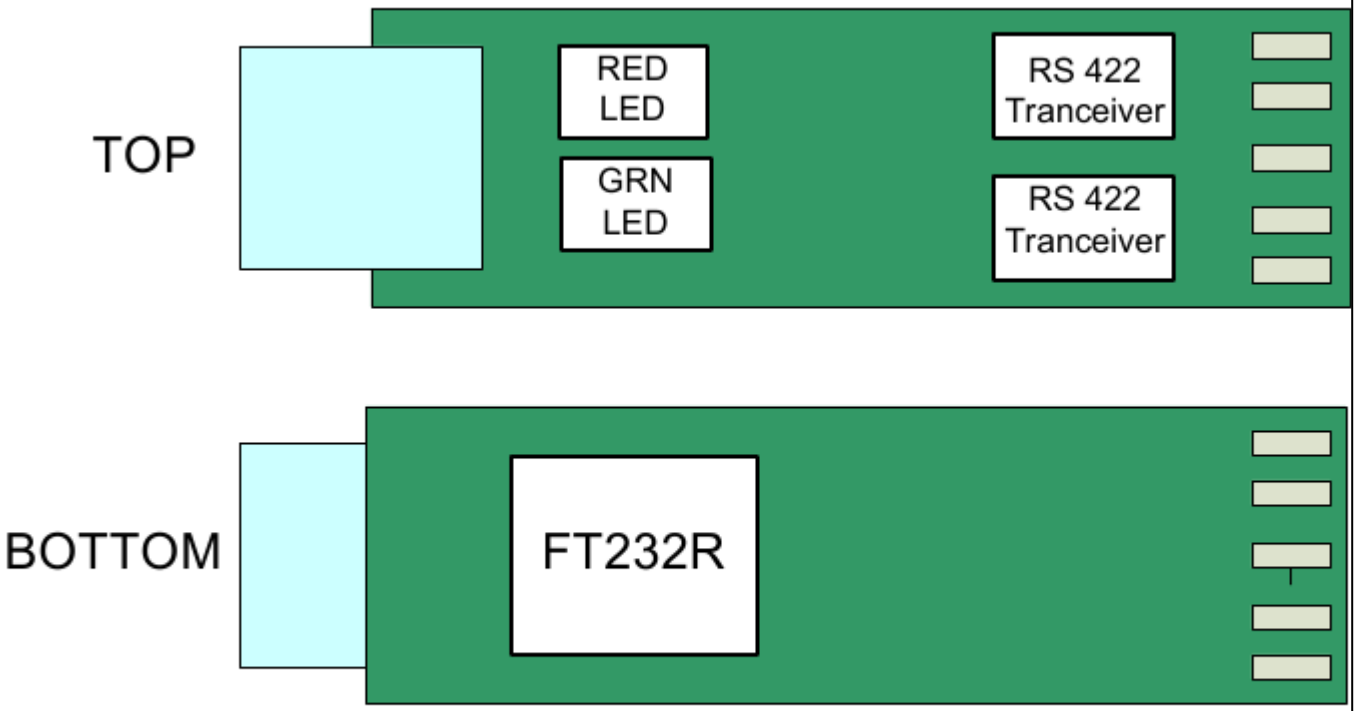

USB-RS422-PCB REV 2

	RJ45 pin	colour
TXD-	6	green
TXD+	7	green/wht
GND		
RTS-		
RTS+		
+5V	7	brown/wht
GND		
CTS-	8	brown
CTS+		
RXD-		
RXD+	1	orange/wht
	2	orange

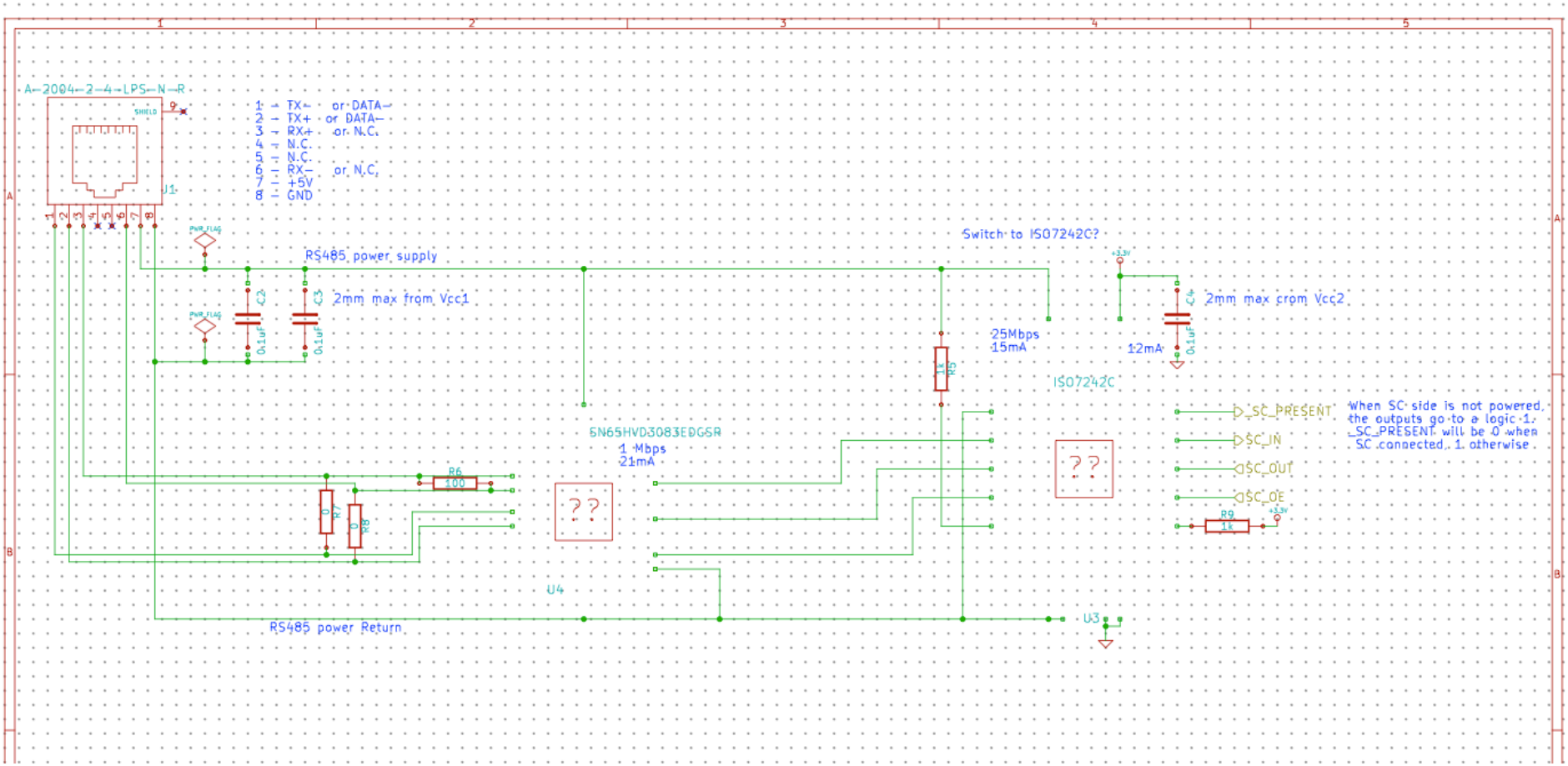
A-2004-2-4-LPS-N-R
SHIELD
J1
1 - TX- or DATA-
2 - TX+ or DATA-
3 - RX+ or N.C.
4 - N.C.
5 - N.C.
6 - RX- or N.C.
7 - +5V
8 - GND
PWR_FLAG
RS485 power supply
C2
C3
0.1uF
2mm max from Vcc1
Switch to ISO7242C?
+3.3V
C4
2mm max from Vcc2
25Mbps
15mA
12mA
R5
1k
ISO7242C
SC_PRESENT
SC_IN
SC_OUT
SC_OE
R9
1k
When SC side is not powered, the outputs go to a logic 1. SC_PRESENT will be 0 when SC connected, 1 otherwise.
SN65HVD3083EDGSR
1 Mbps
21mA
R6
100
R7
0
R8
0
U4
U3
RS485 power Return