UM10398

LPC111x/LPC11Cxx User manual

Rev. 12 — 24 September 2012 **User manual**

Document information

Info	Content
Keywords	ARM Cortex-M0, LPC1111, LPC1112, LPC1113, LPC1114, LPC11C12, LPC11C14, LPC1100, LPC1100L, LPC11C00, LPC11C22, LPC11C24, LPC11D14, LPC1100XL
Abstract	LPC111x/LPC11Cxx User manual

Revision history

Rev	Date	Description
12	20120924	LPC111x/LPC11C1x/LPC11C2x User manual
Modifications:	• BOD level 0 for reset added. See Table 33. • Description of the TEMT bit in the UART LSR register updated. See Table 195.	
11	20120726	LPC111x/LPC11C1x/LPC11C2x User manual
Modifications:	• Function SSEL1 added to pin PIO2_0 in Table 170 and Figure 28. • BOD level 0 for reset and interrupt removed.	
10	20120626	LPC111x/LPC11C1x/LPC11C2x User manual
Modifications:	• LPC1112FHN24 pinout corrected in Table 161 and Figure 18. • Description of BYPASS bit corrected in Table 12 “System oscillator control register (SYSOSCCTRL, address 0x4004 8020) bit description”.	
9	20120517	LPC111x/LPC11C1x/LPC11C2x/LPC11D14 User manual
Modifications:	• LPC11D14/PCF8576D block diagram updated (see Figure 5). • Description of interrupt use with IAP calls updated (see Section 26.4.7). • SYSRSTSTAT register access changed to R/W (Table 7). • Frequency values for FREQSEL bits in the WDTOSCCTRL register corrected (see Table 13). • Figure 9 updated ($\overline{\text{RESET}}$ changed to internal reset). • Limit number of bytes copied in Copy RAM to flash ISP and IAP commands for parts with less than 4 kB SRAM (see Table 381 and Table 396). • Figure 14 updated with pseudo open-drain mode. • Part LPC1112FHN24/202 added. • Part IDs added for parts LPC1110FD20, LPC1111FDH20/002, LPC1112FD20/102, LPC1112FDH20/102, LPC1112FDH28/102, LPC1114FDH28/102, LPC1114FN28/102. • SRAM use by bootloader specified in Section 26.3.1.	
8	20120308	LPC111x/LPC11C1x/LPC11C2x User manual
7	20110919	LPC111x/LPC11C1x/LPC11C2x User manual
6	20110822	LPC111x/LPC11C1x/LPC11C2x User manual
5	20110621	LPC111x/LPC11C1x/LPC11C2x User manual
4	20110304	LPC111x/LPC11C1x/LPC11C2x User manual
3	20110114	LPC111x/LPC11C1x/LPC11C2x User manual
2	20101102	LPC111x/LPC11C1x User manual
1	20100721	LPC111x/LPC11C1x User manual

Contact information

For more information, please visit: **http://www.nxp.com**

For sales office addresses, please send an email to: **salesaddresses@nxp.com**

All information provided in this document is subject to legal disclaimers.

© NXP B.V. 2012. All rights reserved.

1.1 Introduction

The LPC111x/LPC11Cxx are a ARM Cortex-M0 based, low-cost 32-bit MCU family, designed for 8/16-bit microcontroller applications, offering performance, low power, simple instruction set and memory addressing together with reduced code size compared to existing 8/16-bit architectures.

The LPC111x/LPC11Cxx operate at CPU frequencies of up to 50 MHz.

The peripheral complement of the LPC111x/LPC11Cxx includes up to 32 kB of flash memory, up to 8 kB of data memory, one C_CAN controller (LPC11Cxx), one Fast-mode Plus I^2C-bus interface, one RS-485/EIA-485 UART, up to two SPI interfaces with SSP features, four general purpose timers, a 10-bit ADC, and up to 42 general purpose I/O pins.

On-chip C_CAN drivers and flash In-System Programming tools via C_CAN are included on the LPC11Cxx. In addition, parts LPC11C2x are equipped with an on-chip CAN transceiver.

Remark: This user manual covers the LPC111x/LPC11Cxx parts and the LPC11D14 dual-chip part with PCF8576D LCD controller. The LPC111x/LPC11Cxx parts are grouped by the following series and part names (see Table 1 for a feature overview):

- LPC1100 series (parts LPC111x/101/201/301)
- LPC1100L series (parts LPC111x/102/202/302) and part LPC11D14 with LCD controller.
- LPC1100XL series (parts LPC111x/103/203/323/333)
- LPC11C00 series (parts LPC11C1x/301 and LPC11C2x/301) with C_CAN controller.

All information provided in this document is subject to legal disclaimers.
© NXP B.V. 2012. All rights reserved.

Table 1. LPC111x/LPC11Cxx feature changes

Series	Features overview
LPC1100 series	• I2C, SSP, UART, GPIO • Timers and watch dog timer • 10-bit ADC • Flash/SRAM memory • For a full feature list, see Section 1.2.
LPC1100L series	LPC1100 series features plus the following additional features: • Power profiles with lower power consumption in Active and Sleep modes. • Internal pull-up resistors pull up pins to full V_{DD} level. • Programmable pseudo open-drain mode for GPIO pins. • WWDT with clock source lock capability. • Small packages (TSSOP, SO, DIP, HVQFN)
LPC1100XL series	LPC1100L series features plus the following new features: • Flash page erase In-Application Programming (IAP) function. • Timer, UART, and SSP functions pinned out on additional pins. • One capture function added for each timer. • Capture-clear feature on the 16-bit and 32-bit timers for easy pulse-width measurements.
LPC11C00 series	LPC1100 series features plus the following additional features: • CAN controller. • On-chip CAN drivers. • On-chip CAN transceiver (LPC11C2x). • WDT (not windowed) with clock source lock capability.
LPC11D14 (LPC1100L series)	LPC1100L series with LCD controller PCF8576D in a dual-chip package.

All information provided in this document is subject to legal disclaimers.

© NXP B.V. 2012. All rights reserved.

1.2 Features

- System:
  - ARM Cortex-M0 processor, running at frequencies of up to 50 MHz.
  - ARM Cortex-M0 built-in Nested Vectored Interrupt Controller (NVIC).
  - Serial Wire Debug.
  - System tick timer.
- Memory:
  - On-chip flash programming memory for LPC1100, LPC1100L, and LPC1100C series: 32 kB (LPC1114/LPC11C14), 24 kB (LPC1113), 16 kB (LPC1112/LPC11C12), or 8 kB (LPC1111), 4kB (LPC1110) .
  - On-chip flash programming memory for LPC1100XL series: 8 kB (LPC1111), 16 kB (LPC1112), 24 kB (LPC1113), 32 kB (LPC1114/203/303), 48 kB (LPC1114/323), 56 kB (LPC1114/333), 64 kB (LPC1115).
  - 8 kB, 4 kB, 2 kB, or 1 kB SRAM.
  - In-System Programming (ISP) and In-Application Programming (IAP) via on-chip bootloader software.
  - LPC1100XL series only: page erase IAP command.
- Digital peripherals:
  - Up to 42 General Purpose I/O (GPIO) pins with configurable pull-up/pull-down resistors. Number of GPIO pins is reduced for smaller packages and LPC11C22/C24.
  - GPIO pins can be used as edge and level sensitive interrupt sources.
  - High-current output driver (20 mA) on one pin.
  - High-current sink drivers (20 mA) on two I^2C-bus pins in Fast-mode Plus.
  - Four general purpose timers/counters with a total of four capture inputs and up to 13 match outputs.
  - Programmable WatchDog Timer (WDT).
- Analog peripherals:
  - 10-bit ADC with input multiplexing among up to 8 pins.
- Serial interfaces:
  - UART with fractional baud rate generation, internal FIFO, and RS-485 support.
  - Two SPI controllers with SSP features and with FIFO and multi-protocol capabilities (second SPI on LQFP48 packages only).
  - I^2C-bus interface supporting full I^2C-bus specification and Fast-mode Plus with a data rate of 1 Mbit/s with multiple address recognition and monitor mode.
  - C_CAN controller (LPC11Cxx only). On-chip CAN and CANopen drivers included.
  - On-chip, high-speed CAN transceiver (parts LPC11C22/C24 only).
- Clock generation:
  - 12 MHz internal RC oscillator trimmed to 1% accuracy that can optionally be used as a system clock.
  - Crystal oscillator with an operating range of 1 MHz to 25 MHz.

All information provided in this document is subject to legal disclaimers.
© NXP B.V. 2012. All rights reserved.

  - Programmable watchdog oscillator with a frequency range of 7.8 kHz to 1.8 MHz.
  - PLL allows CPU operation up to the maximum CPU rate without the need for a high-frequency crystal. May be run from the system oscillator or the internal RC oscillator.
  - Clock output function with divider that can reflect the system oscillator clock, IRC clock, CPU clock, and the Watchdog clock.
- Power control:
  - Integrated PMU (Power Management Unit) to minimize power consumption during Sleep, Deep-sleep, and Deep power-down modes.
  - Power profiles residing in boot ROM allowing to optimize performance and minimize power consumption for any given application through one simple function call. (On LPC1100L and LPC1100XL parts only).
  - Three reduced power modes: Sleep, Deep-sleep, and Deep power-down.
  - Processor wake-up from Deep-sleep mode via a dedicated start logic using up to 13 of the functional pins.
  - Power-On Reset (POR).
  - Brownout detect with up to four separate thresholds for interrupt and forced reset.
- Unique device serial number for identification.
- Single 3.3 V power supply (1.8 V to 3.6 V).
- Available as LQFP48 package, HVQFN33 package.
- LPC1100L series also available as HVQFN24, TSSOP28 package, DIP28 package, TSSOP20 package, and SO20 package.
- Available as dual-chip module consisting of the LPC1114 single-chip microcontroller combined with a PCF8576D Universal LCD driver in a 100-pin LQFP package (part LPC11D14FBD100/302).[1]

1. For details on the PCF8576D operation, see Ref. 3.

All information provided in this document is subject to legal disclaimers.
© NXP B.V. 2012. All rights reserved.

1.3 Ordering information

Table 2. Ordering information

Type number	Package		
	Name	Description	Version
SO20, TSSOP20, TSSOP28, and DIP28 packages			
LPC1110FD20	SO20	SO20: plastic small outline package; 20 leads; body width 7.5 mm	SOT163-1
LPC1111FDH20/002	TSSOP20	TSSOP20: plastic thin shrink small outline package; 20 leads; body width 4.4 mm	SOT360-1
LPC1112FD20/102	SO20	SO20: plastic small outline package; 20 leads; body width 7.5 mm	SOT163-1
LPC1112FDH20/102	TSSOP20	TSSOP20: plastic thin shrink small outline package; 20 leads; body width 4.4 mm	SOT360-1
LPC1112FDH28/102	TSSOP28	TSSOP28: plastic thin shrink small outline package; 28 leads; body width 4.4 mm	SOT361-1
LPC1114FDH28/102	TSSOP28	TSSOP28: plastic thin shrink small outline package; 28 leads; body width 4.4 mm	SOT361-1
LPC1114FN28/102	DIP28	DIP28: plastic dual in-line package; 28 leads (600 mil)	SOT117-1
HVQFN24/33 and LQFP48 packages			
LPC1111FHN33/101	HVQFN33	HVQFN: plastic thermal enhanced very thin quad flat package; no leads; 33 terminals; body 7 × 7 × 0.85 mm	n/a
LPC1111FHN33/102	HVQFN33	HVQFN: plastic thermal enhanced very thin quad flat package; no leads; 33 terminals; body 7 × 7 × 0.85 mm	n/a
LPC1111FHN33/201	HVQFN33	HVQFN: plastic thermal enhanced very thin quad flat package; no leads; 33 terminals; body 7 × 7 × 0.85 mm	n/a
LPC1111FHN33/202	HVQFN33	HVQFN: plastic thermal enhanced very thin quad flat package; no leads; 33 terminals; body 7 × 7 × 0.85 mm	n/a
LPC1111FHN33/103	HVQFN33	HVQFN: plastic thermal enhanced very thin quad flat package; no leads; 33 terminals; body 7 × 7 × 0.85 mm	n/a
LPC1111FHN33/203	HVQFN33	HVQFN: plastic thermal enhanced very thin quad flat package; no leads; 33 terminals; body 7 × 7 × 0.85 mm	n/a
LPC1112FHN33/101	HVQFN33	HVQFN: plastic thermal enhanced very thin quad flat package; no leads; 33 terminals; body 7 × 7 × 0.85 mm	n/a
LPC1112FHN33/102	HVQFN33	HVQFN: plastic thermal enhanced very thin quad flat package; no leads; 33 terminals; body 7 × 7 × 0.85 mm	n/a
LPC1112FHN33/201	HVQFN33	HVQFN: plastic thermal enhanced very thin quad flat package; no leads; 33 terminals; body 7 × 7 × 0.85 mm	n/a
LPC1112FHN33/202	HVQFN33	HVQFN: plastic thermal enhanced very thin quad flat package; no leads; 33 terminals; body 7 × 7 × 0.85 mm	n/a
LPC1112FHN24/202	HVQFN24	HVQFN24: plastic thermal enhanced very thin quad flat package; no leads; 24 terminals; body 4 x 4 x 0.85 mm	sot616-3
LPC1112FHI33/202	HVQFN33	HVQFN: plastic thermal enhanced very thin quad flat package; no leads; 33 terminals; body 5 × 5 × 0.85 mm	n/a
LPC1112FHI33/203	HVQFN33	HVQFN: plastic thermal enhanced very thin quad flat package; no leads; 33 terminals; body 5 × 5 × 0.85 mm	n/a
LPC1112FHN33/103	HVQFN33	HVQFN: plastic thermal enhanced very thin quad flat package; no leads; 33 terminals; body 7 × 7 × 0.85 mm	n/a
LPC1112FHN33/203	HVQFN33	HVQFN: plastic thermal enhanced very thin quad flat package; no leads; 33 terminals; body 7 × 7 × 0.85 mm	n/a

All information provided in this document is subject to legal disclaimers.

© NXP B.V. 2012. All rights reserved.

Table 2. Ordering information *…continued*

Type number	Package		
	Name	Description	Version
LPC1113FHN33/201	HVQFN33	HVQFN: plastic thermal enhanced very thin quad flat package; no leads; 33 terminals; body 7 × 7 × 0.85 mm	n/a
LPC1113FHN33/202	HVQFN33	HVQFN: plastic thermal enhanced very thin quad flat package; no leads; 33 terminals; body 7 × 7 × 0.85 mm	n/a
LPC1113FHN33/301	HVQFN33	HVQFN: plastic thermal enhanced very thin quad flat package; no leads; 33 terminals; body 7 × 7 × 0.85 mm	n/a
LPC1113FHN33/302	HVQFN33	HVQFN: plastic thermal enhanced very thin quad flat package; no leads; 33 terminals; body 7 × 7 × 0.85 mm	n/a
LPC1113FHN33/203	HVQFN33	HVQFN: plastic thermal enhanced very thin quad flat package; no leads; 33 terminals; body 7 × 7 × 0.85 mm	n/a
LPC1113FHN33/303	HVQFN33	HVQFN: plastic thermal enhanced very thin quad flat package; no leads; 33 terminals; body 7 × 7 × 0.85 mm	n/a
LPC1114FHN33/201	HVQFN33	HVQFN: plastic thermal enhanced very thin quad flat package; no leads; 33 terminals; body 7 × 7 × 0.85 mm	n/a
LPC1114FHN33/202	HVQFN33	HVQFN: plastic thermal enhanced very thin quad flat package; no leads; 33 terminals; body 7 × 7 × 0.85 mm	n/a
LPC1114FHN33/301	HVQFN33	HVQFN: plastic thermal enhanced very thin quad flat package; no leads; 33 terminals; body 7 × 7 × 0.85 mm	n/a
LPC1114FHN33/302	HVQFN33	HVQFN: plastic thermal enhanced very thin quad flat package; no leads; 33 terminals; body 7 × 7 × 0.85 mm	n/a
LPC1114FHI33/302	HVQFN33	HVQFN: plastic thermal enhanced very thin quad flat package; no leads; 33 terminals; body 5 × 5 × 0.85 mm	n/a
LPC1114FHI33/303	HVQFN33	HVQFN: plastic thermal enhanced very thin quad flat package; no leads; 33 terminals; body 5 × 5 × 0.85 mm	n/a
LPC1114FHN33/203	HVQFN33	HVQFN: plastic thermal enhanced very thin quad flat package; no leads; 33 terminals; body 7 × 7 × 0.85 mm	n/a
LPC1114FHN33/303	HVQFN33	HVQFN: plastic thermal enhanced very thin quad flat package; no leads; 33 terminals; body 7 × 7 × 0.85 mm	n/a
LPC1114FHN33/333	HVQFN33	HVQFN: plastic thermal enhanced very thin quad flat package; no leads; 33 terminals; body 7 × 7 × 0.85 mm	n/a
LPC1113FBD48/301	LQFP48	LQFP48: plastic low profile quad flat package; 48 leads; body 7 × 7 × 1.4 mm	SOT313-2
LPC1113FBD48/302	LQFP48	LQFP48: plastic low profile quad flat package; 48 leads; body 7 × 7 × 1.4 mm	SOT313-2
LPC1113FBD48/303	LQFP48	LQFP48: plastic low profile quad flat package; 48 leads; body 7 × 7 × 1.4 mm	SOT313-2
LPC1114FBD48/301	LQFP48	LQFP48: plastic low profile quad flat package; 48 leads; body 7 × 7 × 1.4 mm	SOT313-2
LPC1114FBD48/302	LQFP48	LQFP48: plastic low profile quad flat package; 48 leads; body 7 × 7 × 1.4 mm	SOT313-2
LPC1114FBD48/303	LQFP48	LQFP48: plastic low profile quad flat package; 48 leads; body 7 × 7 × 1.4 mm	SOT313-2

All information provided in this document is subject to legal disclaimers.

© NXP B.V. 2012. All rights reserved.

Table 2. Ordering information *...continued*

Type number	Package		
	Name	Description	Version
LPC1114FBD48/323	LQFP48	LQFP48: plastic low profile quad flat package; 48 leads; body 7 × 7 × 1.4 mm	SOT313-2
LPC1114FBD48/333	LQFP48	LQFP48: plastic low profile quad flat package; 48 leads; body 7 × 7 × 1.4 mm	SOT313-2
LPC1115FBD48/303	LQFP48	LQFP48: plastic low profile quad flat package; 48 leads; body 7 × 7 × 1.4 mm	SOT313-2

Table 3. Ordering options

Type number	Series	Flash	Total SRAM	UART RS-485	I^2C/ Fm+	SPI	Power profiles	ADC channels	GPIO	C_CAN	Package
LPC1110											
LPC1110FD20	LPC1100L	4 kB	1 kB	1	1	1	yes	5	16	-	SO20
LPC1111											
LPC1111FDH20/002	LPC1100L	8 kB	2 kB	1	1	1	yes	5	16	-	TSSOP20
LPC1111FHN33/101	LPC1100	8 kB	2 kB	1	1	1	no	8	28	-	HVQFN33
LPC1111FHN33/102	LPC1100L	8 kB	2 kB	1	1	1	yes	8	28	-	HVQFN33
LPC1111FHN33/103	LPC1100XL	8 kB	2 kB	1	1	2	yes	8	28	-	HVQFN33
LPC1111FHN33/201	LPC1100	8 kB	4 kB	1	1	1	no	8	28	-	HVQFN33
LPC1111FHN33/202	LPC1100L	8 kB	4 kB	1	1	1	yes	8	28	-	HVQFN33
LPC1111FHN33/203	LPC1100XL	8 kB	4 kB	1	1	2	yes	8	28	-	HVQFN33
LPC1112											
LPC1112FD20/102	LPC1100L	16 kB	4 kB	1	1	1	yes	5	16	-	SO20
LPC1112FDH20/102	LPC1100L	16 kB	4 kB	1	-	1	yes	5	14	-	TSSOP20
LPC1112FDH28/102	LPC1100L	16 kB	4 kB	1	1	1	yes	6	22	-	TSSOP28
LPC1112FHN33/101	LPC1100	16 kB	2 kB	1	1	1	no	8	28	-	HVQFN33
LPC1112FHN33/102	LPC1100L	16 kB	2 kB	1	1	1	yes	8	28	-	HVQFN33
LPC1112FHN33/103	LPC1100XL	16 kB	2 kB	1	1	2	yes	8	28	-	HVQFN33
LPC1112FHN33/201	LPC1100	16 kB	4 kB	1	1	1	no	8	28	-	HVQFN33
LPC1112FHN24/202	LPC1100L	16 kB	4 kB	1	1	1	yes	6	19	-	HVQFN24
LPC1112FHN33/202	LPC1100L	16 kB	4 kB	1	1	1	yes	8	28	-	HVQFN33
LPC1112FHN33/203	LPC1100XL	16 kB	4 kB	1	1	2	yes	8	28	-	HVQFN33
LPC1112FHI33/202	LPC1100L	16 kB	4 kB	1	1	1	yes	8	28	-	HVQFN33
LPC1112FHI33/203	LPC1100XL	16 kB	4 kB	1	1	2	yes	8	28	-	HVQFN33
LPC1113											
LPC1113FHN33/201	LPC1100	24 kB	4 kB	1	1	1	no	8	28	-	HVQFN33
LPC1113FHN33/202	LPC1100L	24 kB	4 kB	1	1	1	yes	8	28	-	HVQFN33
LPC1113FHN33/203	LPC1100XL	24 kB	4 kB	1	1	2	yes	8	28	-	HVQFN33
LPC1113FHN33/301	LPC1100	24 kB	8 kB	1	1	1	no	8	28	-	HVQFN33

All information provided in this document is subject to legal disclaimers.

© NXP B.V. 2012. All rights reserved.

Table 3. Ordering options *...continued*

Type number	Series	Flash	Total SRAM	UART RS-485	I²C/ Fm+	SPI	Power profiles	ADC channels	GPIO	C_CAN	Package
LPC1113FHN33/302	LPC1100L	24 kB	8 kB	1	1	1	yes	8	28	-	HVQFN33
LPC1113FHN33/303	LPC1100XL	24 kB	8 kB	1	1	2	yes	8	28	-	HVQFN33
LPC1113FBD48/301	LPC1100	24 kB	8 kB	1	1	2	no	8	42	-	LQFP48
LPC1113FBD48/302	LPC1100L	24 kB	8 kB	1	1	2	yes	8	42	-	LQFP48
LPC1113FBD48/303	LPC1100XL	24 kB	8 kB	1	1	2	yes	8	42	-	LQFP48
LPC1114											
LPC1114FDH28/102	LPC1100L	32 kB	4 kB	1	1	1	yes	6	22		TSSOP28
LPC1114FN28/102	LPC1100L	32 kB	4 kB	1	1	1	yes	6	22		DIP28
LPC1114FHN33/201	LPC1100	32 kB	4 kB	1	1	1	no	8	28	-	HVQFN33
LPC1114FHN33/202	LPC1100L	32 kB	4 kB	1	1	1	yes	8	28	-	HVQFN33
LPC1114FHN33/203	LPC1100XL	32 kB	4 kB	1	1	2	yes	8			
LPC1114FHN33/301	LPC1100	32 kB	8 kB	1	1	1	no	8	28	-	HVQFN33
LPC1114FHN33/302	LPC1100L	32 kB	8 kB	1	1	1	yes	8	28	-	HVQFN33
LPC1114FHN33/303	LPC1100XL	32 kB	8 kB	1	1	2	yes	8	28	-	HVQFN33
LPC1114FHN33/333	LPC1100XL	56 kB	8 kB	1	1	2	yes	8	28	-	HVQFN33
LPC1114FHI33/302	LPC1100L	32 kB	8 kB	1	1	1	yes	8	28	-	HVQFN33
LPC1114FHI33/303	LPC1100XL	32 kB	8 kB	1	1	2	yes	8	28	-	HVQFN33
LPC1114FBD48/301	LPC1100	32 kB	8 kB	1	1	2	no	8	42	-	LQFP48
LPC1114FBD48/302	LPC1100L	32 kB	8 kB	1	1	2	yes	8	42	-	LQFP48
LPC1114FBD48/303	LPC1100XL	32 kB	8 kB	1	1	2	yes	8	42	-	LQFP48
LPC1114FBD48/323	LPC1100XL	48 kB	8 kB	1	1	2	yes	8	42	-	LQFP48
LPC1114FBD48/333	LPC1100XL	56 kB	8 kB	1	1	2	yes	8	42	-	LQFP48
LPC1115											
LPC1115FBD48/303	LPC1100XL	64 kB	8 kB	1	1	2	yes	8	42	-	LQFP48
LPC11C12/LPC11C14											
LPC11C12FBD48/301	LPC11C00	16 kB	8 kB	1	1	2	no	8	40	1	LQFP48
LPC11C14FBD48/301	LPC11C00	32 kB	8 kB	1	1	2	no	8	40	1	LQFP48
LPC11C22/LPC11C24 with on-chip, high-speed CAN transceiver											
LPC11C22FBD48/301	LPC11C00	16 kB	8 kB	1	1	2	no	8	36	1	LQFP48
LPC11C24FBD48/301	LPC11C00	32 kB	8 kB	1	1	2	no	8	36	1	LQFP48
LPC11D14 dual-chip module with PCF8576D LCD driver[1]											
LPC11D14FBD100/302	LPC1100L	32 kB	8 kB	1	1	2	yes	8	42	-	LQFP100

All information provided in this document is subject to legal disclaimers.

© NXP B.V. 2012. All rights reserved.

1.4 Block diagram

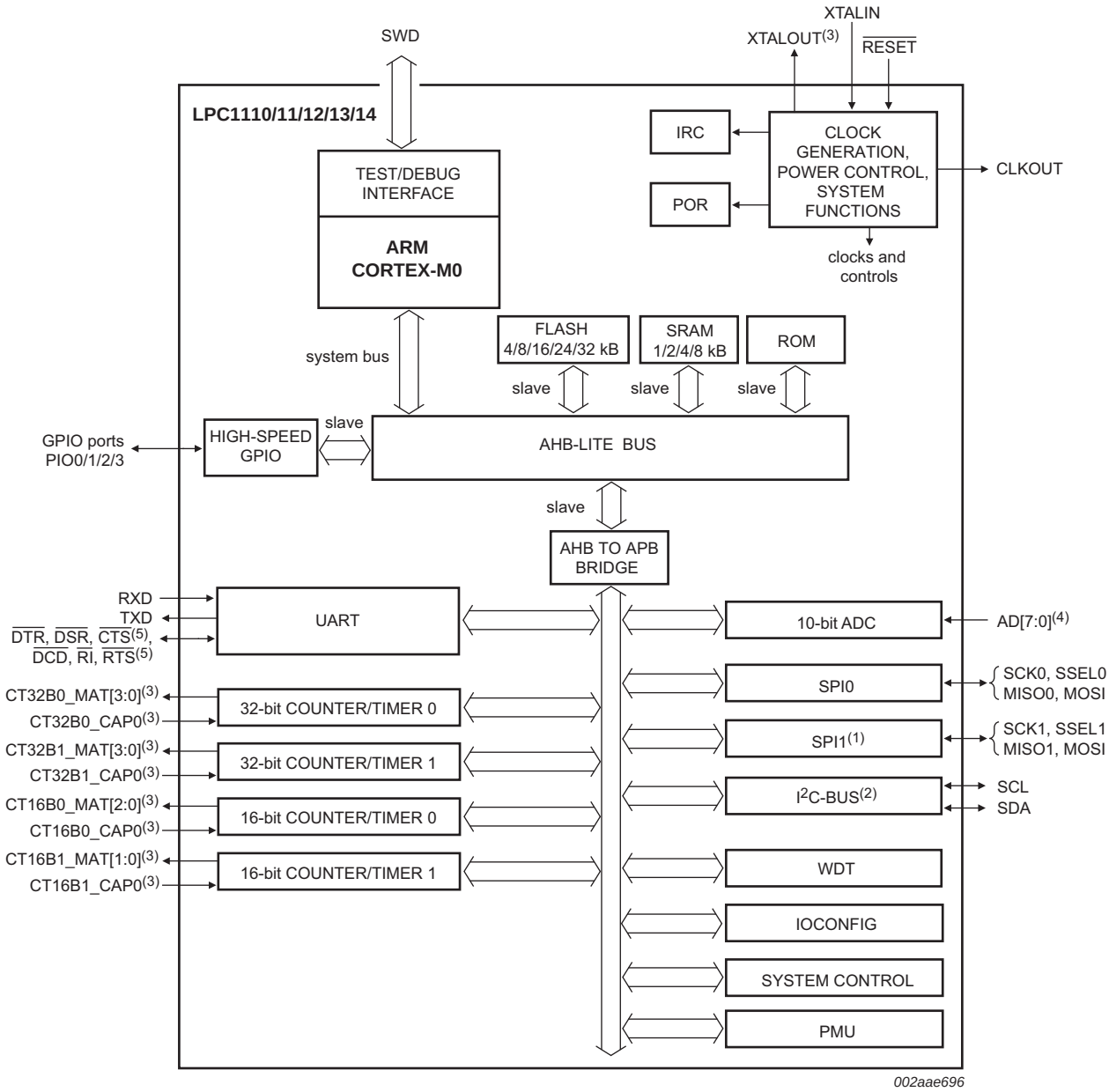

(1) LQFP48 packages only.

(2) Not on LPC1112FDH20/102.

(3) All pins available on LQFP48 and HVQFN33 packages. CT16B1_MAT1 not available on TSSOP28/DIP28 packages. CT32B1_MAT3, CT16B1_CAP0, CT16B1_MAT[1:0], CT32B0_CAP0 not available on TSSOP20/SO20 packages. CT16B1_MAT[1:0], CT32B0_CAP0 not available on the HVQFN24 package. XTALOUT not available on LPC1112FHN24.

(4) AD[7:0] available on LQFP48 and HVQFN33 packages. AD[5:0] available on TSSOP28/DIP28/HVQFN24packages. AD[4:0] available on TSSOP20/SO20 packages.

(5) All pins available on LQFP48 packages. RXD, TXD, $\overline{DTR}$, $\overline{CTS}$, $\overline{RTS}$ available on HVQFN 33 packages. RXD, TXD, $\overline{CTS}$, $\overline{RTS}$ available on TSSOP28/DIP28 packages. RXD, TXD available on TSSOP20/SO20 packages.

Fig 1. LPC111x block diagram (LPC1100 and LPC1100L series)

All information provided in this document is subject to legal disclaimers.

© NXP B.V. 2012. All rights reserved.

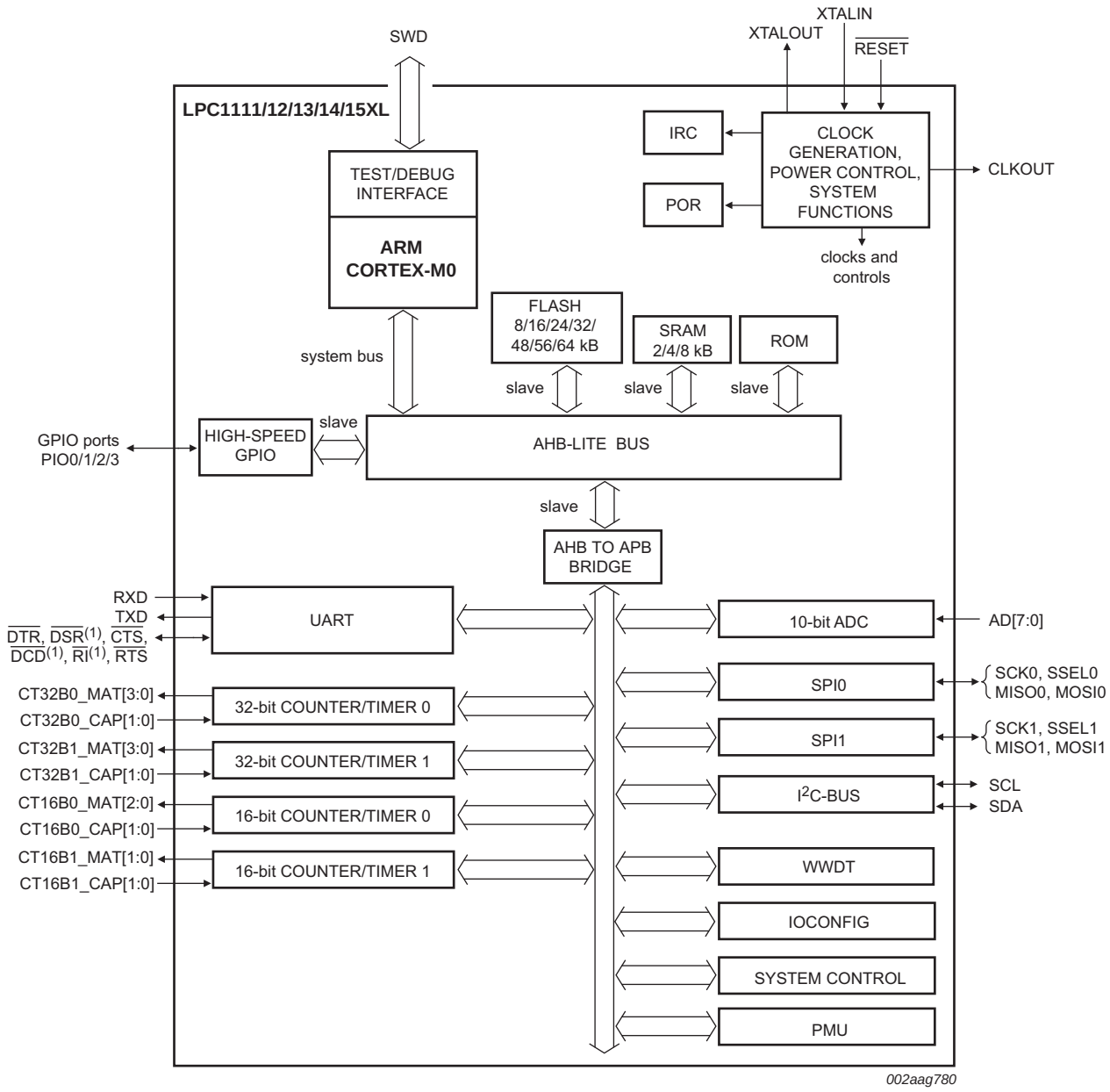

(1) Available on LQFP packages only.

Fig 2. LPC111x block diagram (LPC1100XL series)

All information provided in this document is subject to legal disclaimers.

© NXP B.V. 2012. All rights reserved.

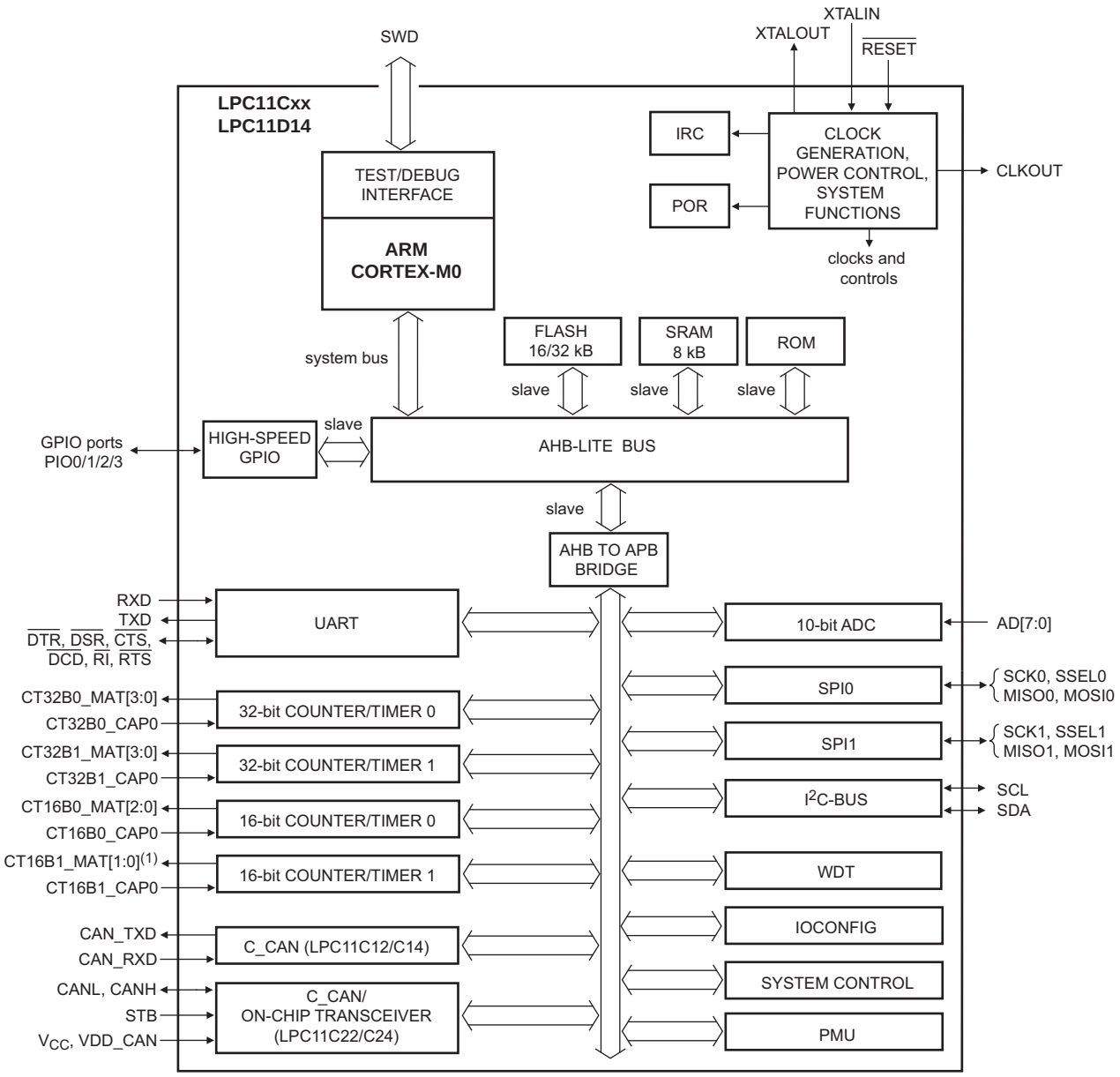

(1) Not available on LPC11C22/C24.

Fig 3. LPC11Cxx/LPC11D14 block diagram (LPC1100C series and LPC11D14)

All information provided in this document is subject to legal disclaimers.

© NXP B.V. 2012. All rights reserved.

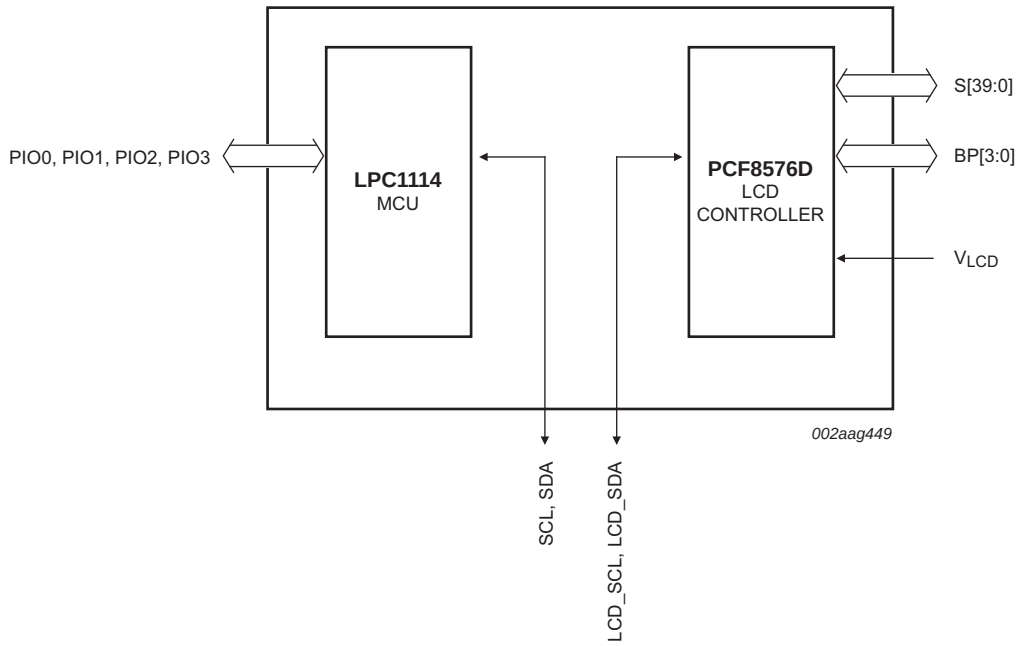

Fig 4. LPC11D14 block diagram

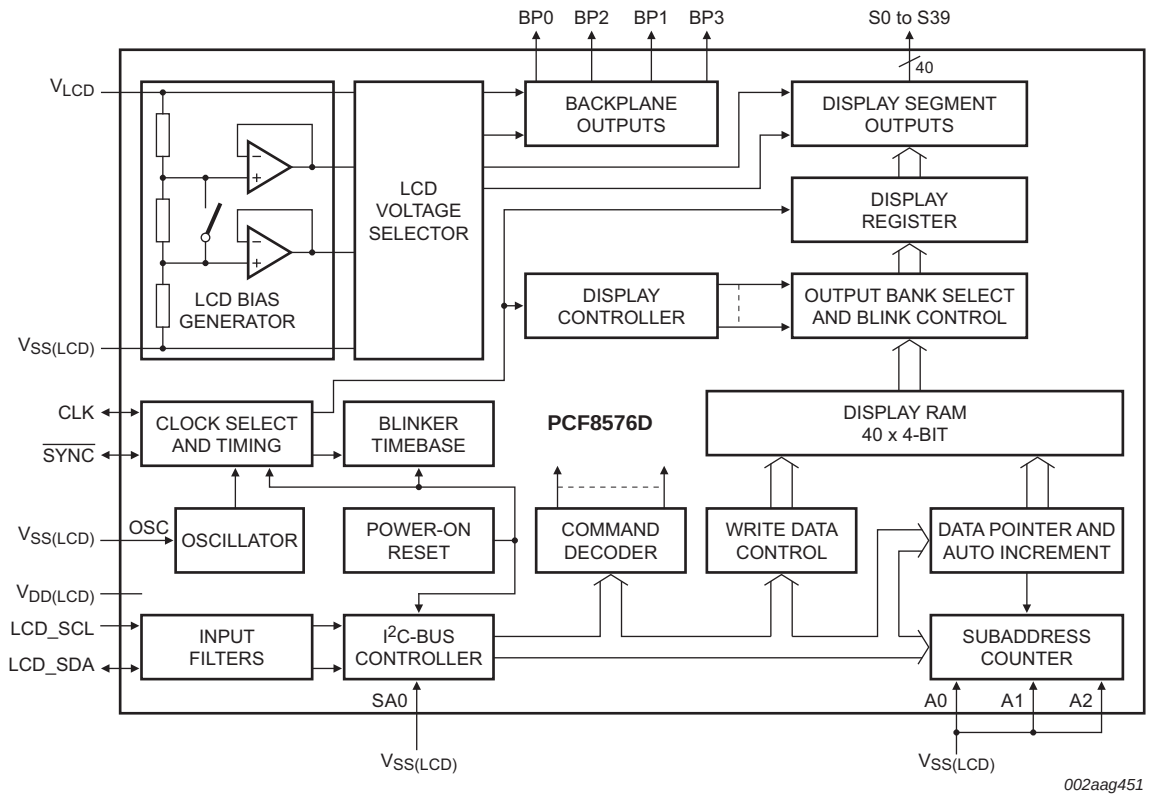

Fig 5. PCF8576D block diagram

All information provided in this document is subject to legal disclaimers.

© NXP B.V. 2012. All rights reserved.

1.5 ARM Cortex-M0 processor

The ARM Cortex-M0 processor is described in detail in Section 28.3 “About the Cortex-M0 processor and core peripherals”. For the LPC111x/LPC11Cxx, the ARM Cortex-M0 processor core is configured as follows:

- System options:
  - The Nested Vectored Interrupt Controller (NVIC) is included and supports up to 32 interrupts.
  - The system tick timer is included.
- Debug options: Serial Wire Debug is included with two watchpoints and four breakpoints.

All information provided in this document is subject to legal disclaimers.
© NXP B.V. 2012. All rights reserved.

2.1 How to read this chapter

Table 4 and Table 5 show the memory configurations for different LPC111x/LPC11Cxx parts.

Table 4. LPC111x memory configuration

Part	Flash	SRAM		
Suffix		/101; /102; /103	/201; /202; /203	/301; /302; /303; /323; /333
LPC1111	8 kB	2 kB	4 KB	-
LPC1112	16 kB	2 kB	4 KB	-
LPC1113	24 kB	-	4 KB	8 kB
LPC1114/LPC11D14	32 kB	-	4 KB	8 kB
LPC1114/323	48 kB	-	-	8 kB
LPC1114/333	56 kB	-	-	8 kB
LPC1115	64 kB	-	-	8 kB

Table 5. LPC11Cxx memory configuration

Part	Flash	SRAM
LPC11C12/301	16 kB	8 kB
LPC11C14/301	32 kB	8 kB
LPC11C22/301	16 kB	8 kB
LPC11C24/301	32 kB	8 kB

2.2 Memory map

Figure 6 and Figure 7 show the memory and peripheral address space of the LPC111x/LPC11Cxx.

The AHB peripheral area is 2 MB in size and is divided to allow for up to 128 peripherals. On the LPC111x/LPC11Cxx, the GPIO ports are the only AHB peripherals. The APB peripheral area is 512 kB in size and is divided to allow for up to 32 peripherals. Each peripheral of either type is allocated 16 kB of space. This allows simplifying the address decoding for each peripheral.

All peripheral register addresses are 32-bit word aligned regardless of their size. An implication of this is that word and half-word registers must be accessed all at once. For example, it is not possible to read or write the upper byte of a word register separately.

All information provided in this document is subject to legal disclaimers.
© NXP B.V. 2012. All rights reserved.

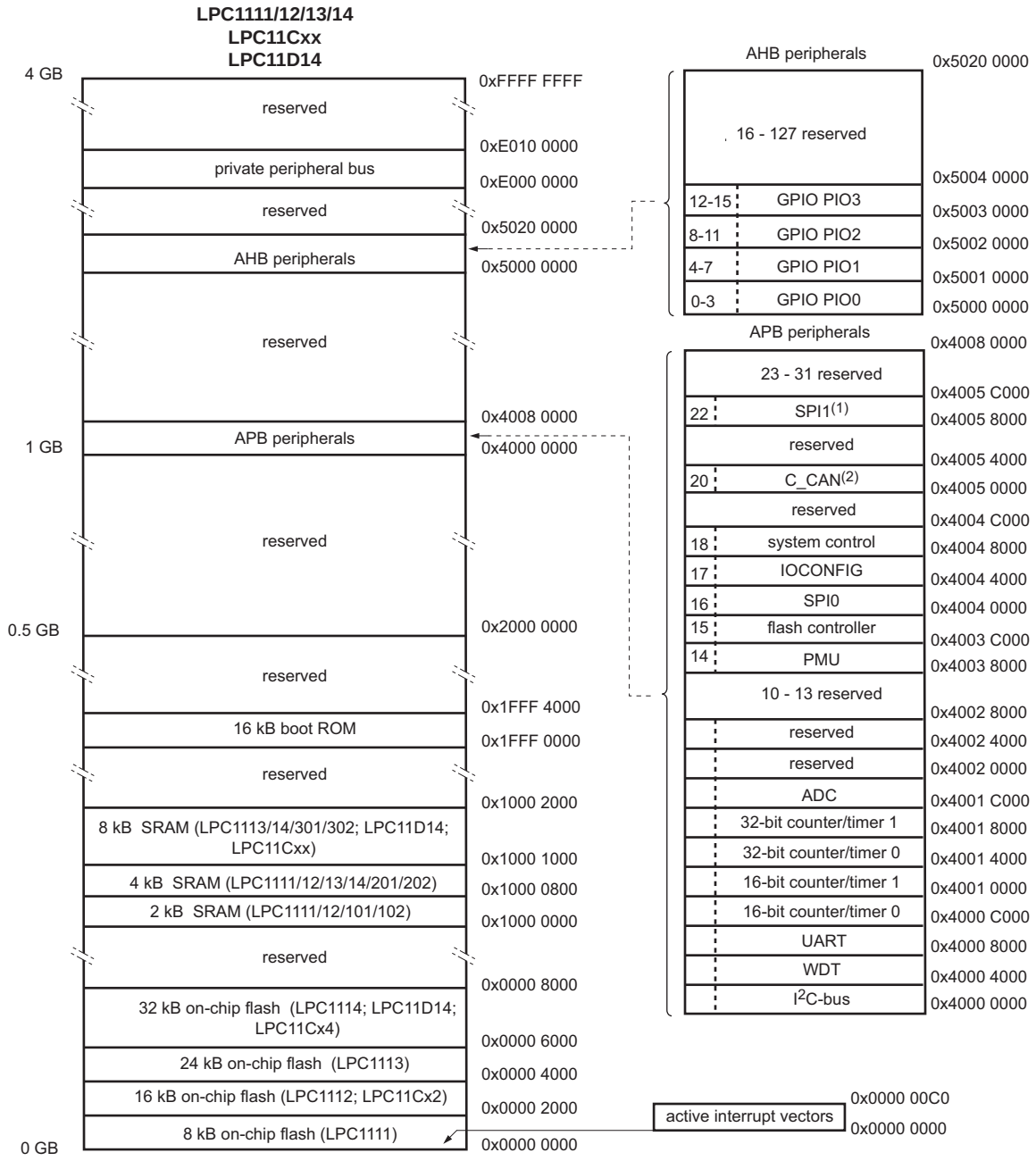

(1) LQFP100/LQFP48 packages only.

(2) LPC11Cxxonly.

Fig 6. LPC111x/LPC11Cxx memory map (LPC1100 and LPC1100L series)

All information provided in this document is subject to legal disclaimers.

© NXP B.V. 2012. All rights reserved.

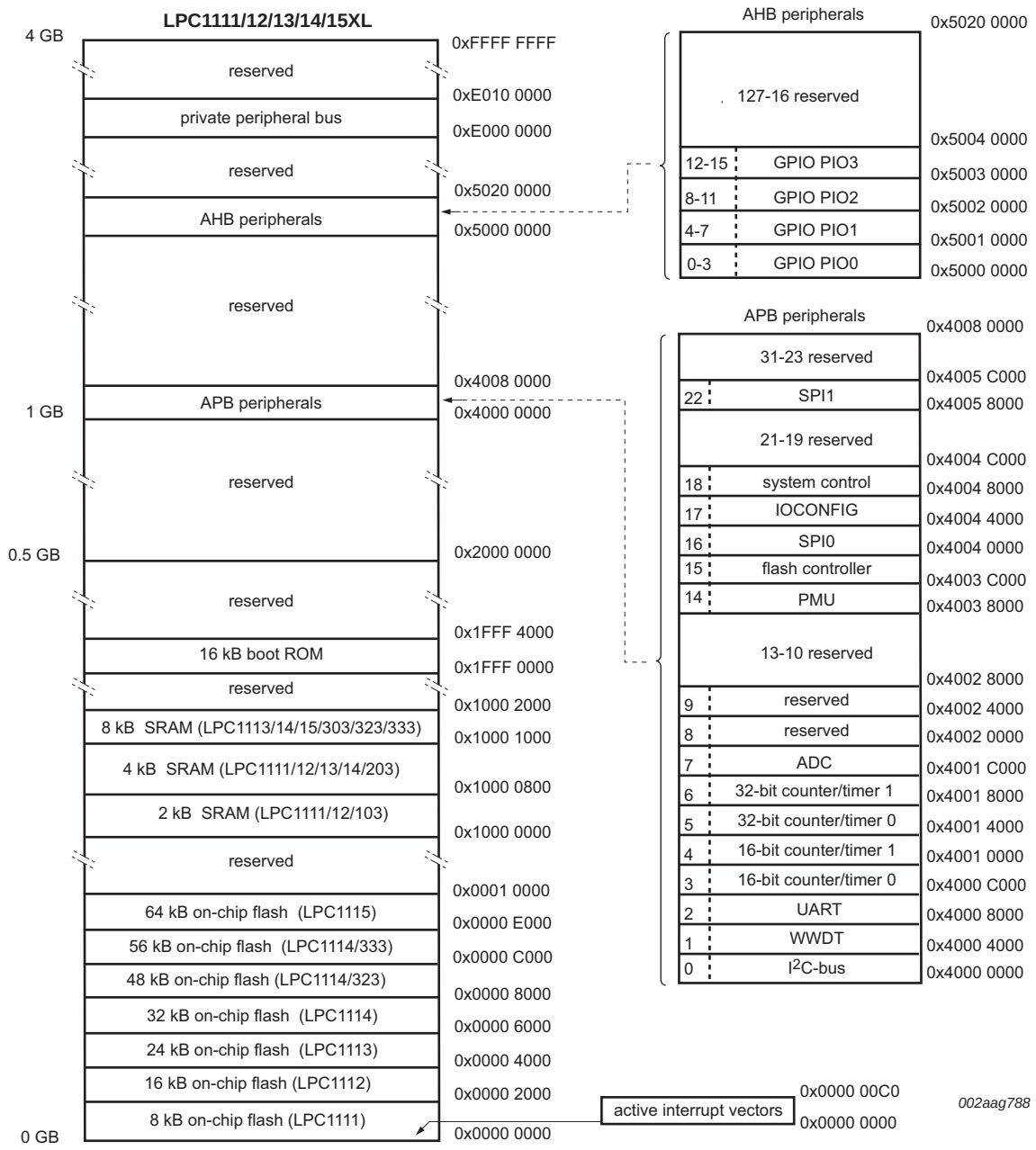

Fig 7. LPC111x memory map (LPC1100XL series)

All information provided in this document is subject to legal disclaimers.

© NXP B.V. 2012. All rights reserved.

3.1 How to read this chapter

The following functions of the system configuration block depend on the specific part number:

DEVICE_ID register

The DEVICE_ID register is valid 0x4004 83F4 for parts of the LPC1100, LPC1100C, and LPC1100L series only.

The device ID cannot be read through the SYSCON block for the LPC1100XL series. Use the ISP part ID command (Table 399) to obtain the device ID for the LPC1100XL parts.

C_CAN controller

The C_CAN clock control bit 17 in the SYSAHBCLKCTRL register (Table 21) and the C_CAN reset control bit 3 in the PRESETCTRL register (Table 9) are only functional for parts LPC11Cxx/101/201/301.

Entering Deep power-down mode

Status of the IRC before entering Deep power-down mode (see Section 3.9.4.2):

- IRC must be enabled for parts LPC111x/101/201/301 and parts LPC11Cxx/101/201/301.
- IRC status has no effect for parts in the LPC1100L and LPC1100XL series.

Enabling sequence for UART clock

Requirements for enabling the UART peripheral clock:

- The UART pins must be configured in the IOCON block before the UART clock can be enabled in the in the SYSAHBCLKCTRL register (Table 21) for parts LPC111x/101/201/301.
- The sequence of configuring the UART pins and the UART clock has no effect for parts in the LPC1100L and LPC1100XL series and parts LPC1100C series.

NMI source selection register

The NMI source selection register is only available on parts in the LPC1100XL series.

3.2 General description

The system configuration block controls oscillators, start logic, and clock generation of the LPC111x/LPC11Cxx. Also included in this block are registers for setting the priority for AHB access and a register for remapping flash, SRAM, and ROM memory areas.

3.3 Pin description

Table 6 shows pins that are associated with system control block functions.

All information provided in this document is subject to legal disclaimers.
© NXP B.V. 2012. All rights reserved.

Table 6. Pin summary

Pin name	Pin direction	Pin description
CLKOUT	O	Clockout pin
PIO0_0 to PIO0_11	I	Start logic wake-up pins port 0
PIO1_0	I	Start logic wake-up pin port 1

3.4 Clock generation

See Figure 8 for an overview of the LPC111x/LPC11Cxx Clock Generation Unit (CGU).

The LPC111x/LPC11Cxx include three independent oscillators. These are the system oscillator, the Internal RC oscillator (IRC), and the watchdog oscillator. Each oscillator can be used for more than one purpose as required in a particular application.

Following reset, the LPC111x/LPC11Cxx will operate from the Internal RC oscillator until switched by software. This allows systems to operate without any external crystal and the bootloader code to operate at a known frequency.

The SYSAHBCLKCTRL register gates the system clock to the various peripherals and memories. UART, the WDT, and SPI0/1 have individual clock dividers to derive peripheral clocks from the main clock.

The main clock and the clock outputs from the IRC, the system oscillator, and the watchdog oscillator can be observed directly on the CLKOUT pin.

For details on power control see Section 3.9.

All information provided in this document is subject to legal disclaimers.
© NXP B.V. 2012. All rights reserved.

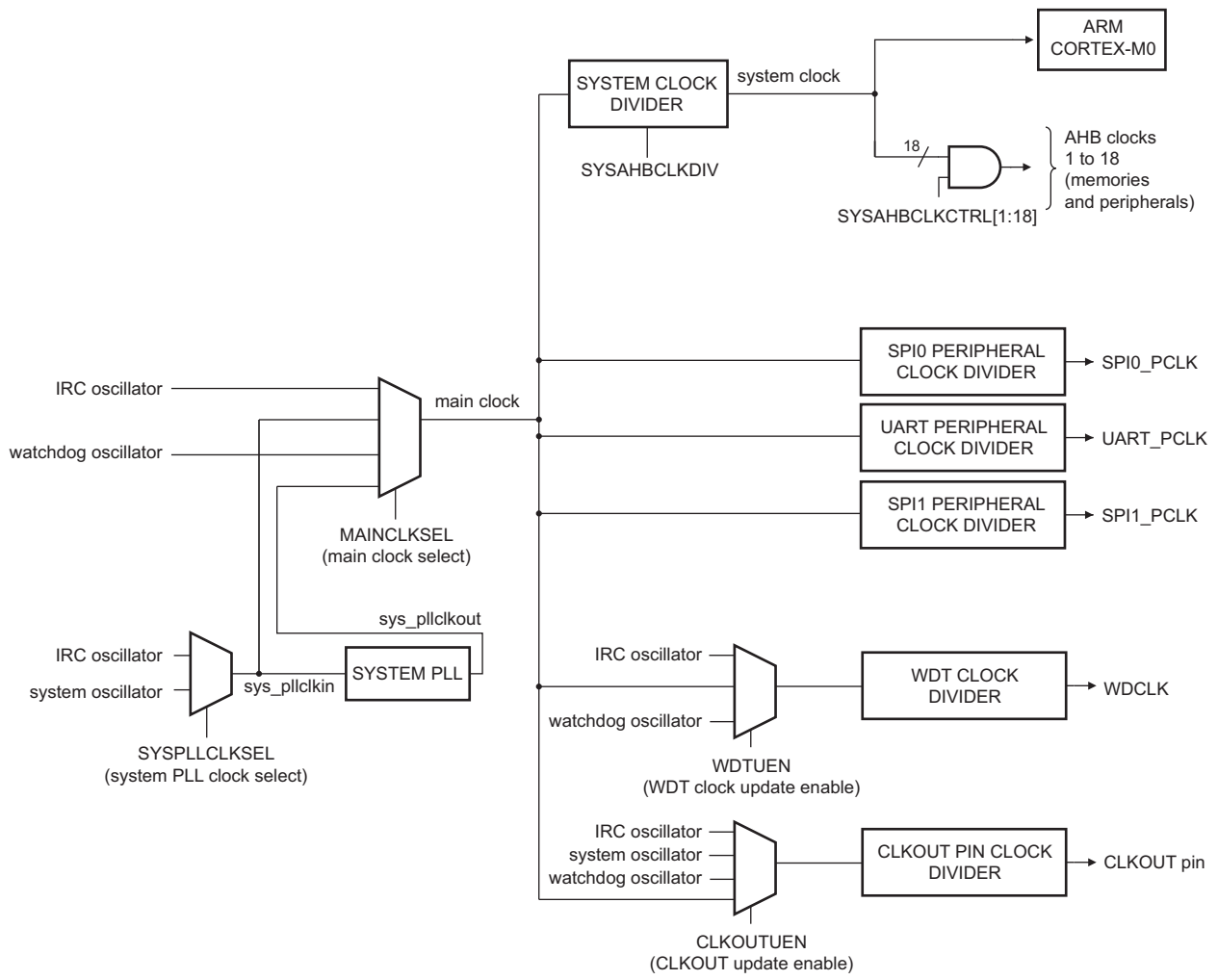

Fig 8. LPC111x/LPC11Cxx CGU block diagram

3.5 Register description

All registers, regardless of size, are on word address boundaries. Details of the registers appear in the description of each function.

See Section 3.12 for the flash access timing register, which can be re-configured as part the system setup. This register is not part of the system configuration block.

Table 7. Register overview: system control block (base address 0x4004 8000)

Name	Access	Address offset	Description	Reset value	Reference
SYSMEMREMAP	R/W	0x000	System memory remap	0x002	Table 8
PRESETCTRL	R/W	0x004	Peripheral reset control	0x000	Table 9
SYSPLLCTRL	R/W	0x008	System PLL control	0x000	Table 10
SYSPLLSTAT	R	0x00C	System PLL status	0x000	Table 11
-	-	0x010 - 0x01C	Reserved	-	-

All information provided in this document is subject to legal disclaimers.
© NXP B.V. 2012. All rights reserved.

Table 7. Register overview: system control block (base address 0x4004 8000) *...continued*

Name	Access	Address offset	Description	Reset value	Reference
SYSOSCCTRL	R/W	0x020	System oscillator control	0x000	Table 12
WDTOSCCTRL	R/W	0x024	Watchdog oscillator control	0x000	Table 13
IRCCTRL	R/W	0x028	IRC control	0x080	Table 14
-	-	0x02C	Reserved	-	-
SYSRSTSTAT	R/W	0x030	System reset status register	0x000	Table 15
-	-	0x034 - 0x03C	Reserved	-	-
SYSPLLCLKSEL	R/W	0x040	System PLL clock source select	0x000	Table 16
SYSPLLCLKUEN	R/W	0x044	System PLL clock source update enable	0x000	Table 17
-	-	0x048 - 0x06C	Reserved	-	-
MAINCLKSEL	R/W	0x070	Main clock source select	0x000	Table 18
MAINCLKUEN	R/W	0x074	Main clock source update enable	0x000	Table 19
SYSAHBCLKDIV	R/W	0x078	System AHB clock divider	0x001	Table 20
-	-	0x07C	Reserved	-	-
SYSAHBCLKCTRL	R/W	0x080	System AHB clock control	0x85F	Table 21
-	-	0x084 - 0x090	Reserved	-	-
SSP0CLKDIV	R/W	0x094	SPI0 clock divider	0x000	Table 22
UARTCLKDIV	R/W	0x098	UART clock divder	0x000	Table 23
SSP1CLKDIV	R/W	0x09C	SPI1 clock divder	0x000	Table 24
-	-	0x0A0-0x0CC	Reserved	-	-
WDTCLKSEL	R/W	0x0D0	WDT clock source select	0x000	Table 25
WDTCLKUEN	R/W	0x0D4	WDT clock source update enable	0x000	Table 26
WDTCLKDIV	R/W	0x0D8	WDT clock divider	0x000	Table 27
-	-	0x0DC	Reserved	-	-
CLKOUTCLKSEL	R/W	0x0E0	CLKOUT clock source select	0x000	Table 28
CLKOUTUEN	R/W	0x0E4	CLKOUT clock source update enable	0x000	Table 29
CLKOUTCLKDIV	R/W	0x0E8	CLKOUT clock divider	0x000	Table 30
-	-	0x0EC - 0x0FC	Reserved	-	-
PIOPORCAP0	R	0x100	POR captured PIO status 0	user dependent	Table 31
PIOPORCAP1	R	0x104	POR captured PIO status 1	user dependent	Table 32
-	R	0x108 - 0x14C	Reserved	-	-
BODCTRL	R/W	0x150	BOD control	0x000	Table 33
SYSTCKCAL	R/W	0x154	System tick counter calibration	0x004	Table 34
-	-	0x158 - 0x170	Reserved	-	-
NMISRC	R/W	0x174	NMI source selection	0x000	Table 35
-	-	0x178 - 0x1FC	Reserved	-	-
STARTAPRP0	R/W	0x200	Start logic edge control register 0		Table 36
STARTERP0	R/W	0x204	Start logic signal enable register 0		Table 37
STARTRSRP0CLR	W	0x208	Start logic reset register 0	n/a	Table 38
STARTSRP0	R	0x20C	Start logic status register 0	n/a	Table 39

All information provided in this document is subject to legal disclaimers. © NXP B.V. 2012. All rights reserved.

Table 7. Register overview: system control block (base address 0x4004 8000) *...continued*

Name	Access	Address offset	Description	Reset value	Reference
-	-	0x210 - 0x22C	Reserved	-	-
PDSLEEPCFG	R/W	0x230	Power-down states in Deep-sleep mode	0x0000 0000	Table 41
PDAWAKECFG	R/W	0x234	Power-down states after wake-up from Deep-sleep mode	0x0000 EDF0	Table 42
PDRUNCFG	R/W	0x238	Power-down configuration register	0x0000 EDF0	Table 43
-	-	0x23C - 0x3F0	Reserved	-	-
DEVICE_ID	R	0x3F4	Device ID register 0 for parts LPC1100, LPC1100C, LPC1100L.	part dependent	Table 44

3.5.1 System memory remap register

The system memory remap register selects whether the ARM interrupt vectors are read from the boot ROM, the flash, or the SRAM. By default, the flash memory is mapped to address 0x0000 0000. When the MAP bits in the SYSMEMREMAP register are set to 0x0 or 0x1, the boot ROM or RAM respectively are mapped to the bottom 512 bytes of the memory map (addresses 0x0000 0000 to 0x0000 0200).

Table 8. System memory remap register (SYSMEMREMAP, address 0x4004 8000) bit description

Bit	Symbol	Value	Description	Reset value
1:0	MAP		System memory remap	10
		0x0	Boot Loader Mode. Interrupt vectors are re-mapped to Boot ROM.	
		0x1	User RAM Mode. Interrupt vectors are re-mapped to Static RAM.	
		0x2	User Flash Mode. Interrupt vectors are not re-mapped and reside in Flash.	
31:2	-	-	Reserved	0x00

3.5.2 Peripheral reset control register

This register allows software to reset the SPI and I2C peripherals. Writing a zero to the SSP0/1_RST_N or I2C_RST_N bits resets the SPI0/1 or I2C peripheral. Writing a one de-asserts the reset.

Remark: Before accessing the SPI and I2C peripherals, write a one to this register to ensure that the reset signals to the SPI and I2C are de-asserted.

Table 9. Peripheral reset control register (PRESETCTRL, address 0x4004 8004) bit description

Bit	Symbol	Value	Description	Reset value
0	SSP0_RST_N		SPI0 reset control	0
		0	Resets the SPI0 peripheral.	
		1	SPI0 reset de-asserted.	

All information provided in this document is subject to legal disclaimers. © NXP B.V. 2012. All rights reserved.

Table 9. Peripheral reset control register (PRESETCTRL, address 0x4004 8004) bit description

Bit	Symbol	Value	Description	Reset value
1	I2C_RST_N		I2C reset control	0
		0	Resets the I2C peripheral.	
		1	I2C reset de-asserted.	
2	SSP1_RST_N		SPI1 reset control	0
		0	Resets the SPI1 peripheral.	
		1	SPI1 reset de-asserted.	
3	CAN_RST_N		C_CAN reset control. See Section 3.1 for part specific details.	0
		0	Resets the C_CAN peripheral.	
		1	C_CAN reset de-asserted.	
31:4	-	-	Reserved	0x00

3.5.3 System PLL control register

This register connects and enables the system PLL and configures the PLL multiplier and divider values. The PLL accepts an input frequency from 10 MHz to 25 MHz from various clock sources. The input frequency is multiplied up to a high frequency, then divided down to provide the actual clock used by the CPU, peripherals, and memories. The PLL can produce a clock up to the maximum allowed for the CPU.

Table 10. System PLL control register (SYSPLLCTRL, address 0x4004 8008) bit description

Bit	Symbol	Value	Description	Reset value
4:0	MSEL		Feedback divider value. The division value M is the programmed MSEL value + 1. 00000: Division ratio M = 1 to 11111: Division ratio M = 32.	0x000
6:5	PSEL		Post divider ratio P. The division ratio is 2 × P.	0x00
		0x0	P = 1	
		0x1	P = 2	
		0x2	P = 4	
		0x3	P = 8	
31:7	-	-	Reserved. Do not write ones to reserved bits.	0x0

3.5.4 System PLL status register

This register is a Read-only register and supplies the PLL lock status (see Section 3.11.1).

All information provided in this document is subject to legal disclaimers.
© NXP B.V. 2012. All rights reserved.

Table 11. System PLL status register (SYSPLLSTAT, address 0x4004 800C) bit description

Bit	Symbol	Value	Description	Reset value
0	LOCK		PLL lock status	0x0
		0	PLL not locked	
		1	PLL locked	
31:1	-	-	Reserved	0x00

3.5.5 System oscillator control register

This register configures the frequency range for the system oscillator.

Table 12. System oscillator control register (SYSOSCCTRL, address 0x4004 8020) bit description

Bit	Symbol	Value	Description	Reset value
0	BYPASS		Bypass system oscillator	0x0
		0	Oscillator is not bypassed.	
		1	Bypass enabled. PLL input (sys_osc_clk) is fed directly from the XTALIN pin bypassing the oscillator. Use this mode when using an external clock source instead of the crystal oscillator.	
1	FREQRANGE		Determines frequency range for Low-power oscillator.	0x0
		0	1 - 20 MHz frequency range.	
		1	15 - 25 MHz frequency range	
31:2	-	-	Reserved	0x00

3.5.6 Watchdog oscillator control register

This register configures the watchdog oscillator. The oscillator consists of an analog and a digital part. The analog part contains the oscillator function and generates an analog clock (Fclkana). With the digital part, the analog output clock (Fclkana) can be divided to the required output clock frequency wdt_osc_clk. The analog output frequency (Fclkana) can be adjusted with the FREQSEL bits between 600 kHz and 4.6 MHz. With the digital part Fclkana will be divided (divider ratios = 2, 4,...,64) to wdt_osc_clk using the DIVSEL bits.

The output clock frequency of the watchdog oscillator can be calculated as wdt_osc_clk = Fclkana/(2 × (1 + DIVSEL)) = 9.3 kHz to 2.3 MHz (nominal values).

Remark: Any setting of the FREQSEL bits will yield a Fclkana value within ±40% of the listed frequency value. The watchdog oscillator is the clock source with the lowest power consumption. If accurate timing is required, use the IRC or system oscillator.

Remark: The frequency of the watchdog oscillator is undefined after reset. The watchdog oscillator frequency must be programmed by writing to the WDTOSCCTRL register before using the watchdog oscillator.

All information provided in this document is subject to legal disclaimers.
© NXP B.V. 2012. All rights reserved.

Table 13. Watchdog oscillator control register (WDTOSCCTRL, address 0x4004 8024) bit description

Bit	Symbol	Value	Description	Reset value
4:0	DIVSEL		Select divider for Fclkana. wdt_osc_clk = Fclkana/ (2 × (1 + DIVSEL)) 00000: 2 × (1 + DIVSEL) = 2 00001: 2 × (1 + DIVSEL) = 4 to 11111: 2 × (1 + DIVSEL) = 64	0
8:5	FREQSEL		Select watchdog oscillator analog output frequency (Fclkana).	0x00
		0x1	0.6 MHz	
		0x2	1.05 MHz	
		0x3	1.4 MHz	
		0x4	1.75 MHz	
		0x5	2.1 MHz	
		0x6	2.4 MHz	
		0x7	2.7 MHz	
		0x8	3.0 MHz	
		0x9	3.25 MHz	
		0xA	3.5 MHz	
		0xB	3.75 MHz	
		0xC	4.0 MHz	
		0xD	4.2 MHz	
		0xE	4.4 MHz	
		0xF	4.6 MHz	
31:9	-	-	Reserved	0x00

3.5.7 Internal resonant crystal control register

This register is used to trim the on-chip 12 MHz oscillator. The trim value is factory-preset and written by the boot code on start-up.

Table 14. Internal resonant crystal control register (IRCCTRL, address 0x4004 8028) bit description

Bit	Symbol	Description	Reset value
7:0	TRIM	Trim value	0x1000 0000, then flash will reprogram
31:8	-	Reserved	0x00

3.5.8 System reset status register

The SYSRSTSTAT register shows the source of the latest reset event. Write a one to clear the reset.

The POR event clears all other bits in this register. If any reset signal - for example EXTRST - remains asserted after the POR signal is negated, then its bit is set to detected in this register.

All information provided in this document is subject to legal disclaimers.

© NXP B.V. 2012. All rights reserved.

The reset value given in Table 15 applies to the POR reset.

Table 15. System reset status register (SYSRSTSTAT, address 0x4004 8030) bit description

Bit	Symbol	Value	Description	Reset value
0	POR		POR reset status	0x0
		0	No POR detected.	
		1	POR detected. Writing a one clears this reset.	
1	EXTRST		Status of the external $\overline{\text{RESET}}$ pin.	0x0
		0	No $\overline{\text{RESET}}$ event detected.	
		1	$\overline{\text{RESET}}$ detected. Writing a one clears this reset.	
2	WDT		Status of the Watchdog reset	0x0
		0	No WDT reset detected.	
		1	WDT reset detected. Writing a one clears this reset.	
3	BOD		Status of the Brown-out detect reset	0x0
		0	No BOD reset detected.	
		1	BOD reset detected. Writing a one clears this reset.	
4	SYSRST		Status of the software system reset	0x0
		0	No System reset detected.	
		1	System reset detected. Writing a one clears this reset.	
31:5	-	-	Reserved	0x0

3.5.9 System PLL clock source select register

This register selects the clock source for the system PLL. The SYSPLLCLKUEN register (see Section 3.5.10) must be toggled from LOW to HIGH for the update to take effect.

Remark: When switching clock sources, both clocks must be running before the clock source is updated.

Remark: When using the C_CAN controller with baudrates above 100 kbit/s, the system oscillator must be selected.

Table 16. System PLL clock source select register (SYSPLLCLKSEL, address 0x4004 8040) bit description

Bit	Symbol	Value	Description	Reset value
1:0	SEL		System PLL clock source	0x00
		0x0	IRC oscillator	
		0x1	System oscillator	
		0x2	Reserved	
		0x3	Reserved	
31:2	-	-	Reserved	0x00

All information provided in this document is subject to legal disclaimers.
© NXP B.V. 2012. All rights reserved.

3.5.10 System PLL clock source update enable register

This register updates the clock source of the system PLL with the new input clock after the SYSPLLCLKSEL register has been written to. In order for the update to take effect, first write a zero to the SYSPLLUEN register and then write a one to SYSPLLUEN.

Remark: When switching clock sources, both clocks must be running before the clock source is updated.

Table 17. System PLL clock source update enable register (SYSPLLCLKUEN, address 0x4004 8044) bit description

Bit	Symbol	Value	Description	Reset value
0	ENA		Enable system PLL clock source update	0x0
		0	No change	
		1	Update clock source	
31:1	-	-	Reserved	0x00

3.5.11 Main clock source select register

This register selects the main system clock which can be either any input to the system PLL, the output from the system PLL (sys_pllclkout), or the watchdog or IRC oscillators directly. The main system clock clocks the core, the peripherals, and the memories.

The MAINCLKUEN register (see Section 3.5.12) must be toggled from LOW to HIGH for the update to take effect.

Remark: When switching clock sources, both clocks must be running before the clock source is updated.

Remark: When using the C_CAN controller with baudrates above 100 kbit/s, the system oscillator must be selected.

Table 18. Main clock source select register (MAINCLKSEL, address 0x4004 8070) bit description

Bit	Symbol	Value	Description	Reset value
1:0	SEL		Clock source for main clock	0x00
		0x0	IRC oscillator	
		0x1	Input clock to system PLL	
		0x2	WDT oscillator	
		0x3	System PLL clock out	
31:2	-	-	Reserved	0x00

3.5.12 Main clock source update enable register

This register updates the clock source of the main clock with the new input clock after the MAINCLKSEL register has been written to. In order for the update to take effect, first write a zero to the MAINCLKUEN register and then write a one to MAINCLKUEN.

Remark: When switching clock sources, both clocks must be running before the clock source is updated.

All information provided in this document is subject to legal disclaimers.
© NXP B.V. 2012. All rights reserved.

Table 19. Main clock source update enable register (MAINCLKUEN, address 0x4004 8074) bit description

Bit	Symbol	Value	Description	Reset value
0	ENA		Enable main clock source update	0x0
		0	No change	
		1	Update clock source	
31:1	-	-	Reserved	0x00

3.5.13 System AHB clock divider register

This register divides the main clock to provide the system clock to the core, memories, and the peripherals. The system clock can be shut down completely by setting the DIV bits to 0x0.

Table 20. System AHB clock divider register (SYSAHBCLKDIV, address 0x4004 8078) bit description

Bit	Symbol	Description	Reset value
7:0	DIV	System AHB clock divider values 0: System clock disabled. 1: Divide by 1. to 255: Divide by 255.	0x01
31:8	-	Reserved	0x00

3.5.14 System AHB clock control register

The AHBCLKCTRL register enables the clocks to individual system and peripheral blocks. The system clock (sys_ahb_clk[0], bit 0 in the AHBCLKCTRL register) provides the clock for the AHB to APB bridge, the AHB matrix, the ARM Cortex-M0, the Syscon block, and the PMU. This clock cannot be disabled.

Table 21. System AHB clock control register (SYSAHBCLKCTRL, address 0x4004 8080) bit description

Bit	Symbol	Value	Description	Reset value
0	SYS		Enables clock for AHB to APB bridge, to the AHB matrix, to the Cortex-M0 FCLK and HCLK, to the SysCon, and to the PMU. This bit is read only.	1
		0	Reserved	
		1	Enable	
1	ROM		Enables clock for ROM.	1
		0	Disable	
		1	Enable	
2	RAM		Enables clock for RAM.	1
		0	Disable	
		1	Enable	
3	FLASHREG		Enables clock for flash register interface.	1
		0	Disabled	
		1	Enabled	

All information provided in this document is subject to legal disclaimers.
© NXP B.V. 2012. All rights reserved.

Table 21. System AHB clock control register (SYSAHBCLKCTRL, address 0x4004 8080) bit description *…continued*

Bit	Symbol	Value	Description	Reset value
4	FLASHARRAY		Enables clock for flash array access.	1
		0	Disabled	
		1	Enabled	
5	I2C		Enables clock for I2C.	0
		0	Disable	
		1	Enable	
6	GPIO		Enables clock for GPIO.	1
		0	Disable	
		1	Enable	
7	CT16B0		Enables clock for 16-bit counter/timer 0.	0
		0	Disable	
		1	Enable	
8	CT16B1		Enables clock for 16-bit counter/timer 1.	0
		0	Disable	
		1	Enable	
9	CT32B0		Enables clock for 32-bit counter/timer 0.	0
		0	Disable	
		1	Enable	
10	CT32B1		Enables clock for 32-bit counter/timer 1.	0
		0	Disable	
		1	Enable	
11	SSP0		Enables clock for SPI0.	1
		0	Disable	
		1	Enable	
12	UART		Enables clock for UART. See Section 3.1 for part specific details.	0
		0	Disable	
		1	Enable	
13	ADC		Enables clock for ADC.	0
		0	Disable	
		1	Enable	
14	-		Reserved	0
15	WDT		Enables clock for WDT.	0
		0	Disable	
		1	Enable	
16	IOCON		Enables clock for I/O configuration block.	0
		0	Disable	
		1	Enable	

All information provided in this document is subject to legal disclaimers.

© NXP B.V. 2012. All rights reserved.

Table 21. System AHB clock control register (SYSAHBCLKCTRL, address 0x4004 8080) bit description *...continued*

Bit	Symbol	Value	Description	Reset value
17	CAN		Enables clock for C_CAN. See Section 3.1 for part specific details.	0
		0	Disable	
		1	Enable	
18	SSP1		Enables clock for SPI1.	0
		0	Disable	
		1	Enable	
31:19	-	-	Reserved	0x00

3.5.15 SPI0 clock divider register

This register configures the SPI0 peripheral clock SPI0_PCLK. The SPI0_PCLK can be shut down by setting the DIV bits to 0x0.

Table 22. SPI0 clock divider register (SSP0CLKDIV, address 0x4004 8094) bit description

Bit	Symbol	Description	Reset value
7:0	DIV	SPI0_PCLK clock divider values 0: Disable SPI0_PCLK. 1: Divide by 1. to 255: Divide by 255.	0x00
31:8	-	Reserved	0x00

3.5.16 UART clock divider register

This register configures the UART peripheral clock UART_PCLK. The UART_PCLK can be shut down by setting the DIV bits to 0x0.

Remark: Note that for some parts the UART pins must be configured in the IOCON block before the UART clock can be enabled. See Section 3.1 for part specific details.

Table 23. UART clock divider register (UARTCLKDIV, address 0x4004 8098) bit description

Bit	Symbol	Description	Reset value
7:0	DIV	UART_PCLK clock divider values 0: Disable UART_PCLK. 1: Divide by 1. to 255: Divide by 255.	0x00
31:8	-	Reserved	0x00

3.5.17 SPI1 clock divider register

This register configures the SPI1 peripheral clock SPI1_PCLK. The SPI1_PCLK can be shut down by setting the DIV bits to 0x0.

All information provided in this document is subject to legal disclaimers.
© NXP B.V. 2012. All rights reserved.

Table 24. SPI1 clock divider register (SSP1CLKDIV, address 0x4004 809C) bit description

Bit	Symbol	Description	Reset value
7:0	DIV	SPI1_PCLK clock divider values 0: Disable SPI1_PCLK. 1: Divide by 1. to 255: Divide by 255.	0x00
31:8	-	Reserved	0x00

3.5.18 WDT clock source select register

This register selects the clock source for the watchdog timer. The WDTCLKUEN register (see Section 3.5.19) must be toggled from LOW to HIGH for the update to take effect.

Remark: When switching clock sources, both clocks must be running before the clock source is updated.

Table 25. WDT clock source select register (WDTCLKSEL, address 0x4004 80D0) bit description

Bit	Symbol	Value	Description	Reset value
1:0	SEL		WDT clock source	0x00
		0x0	IRC oscillator	
		0x1	Main clock	
		0x2	Watchdog oscillator	
		0x3	Reserved	
31:2	-	-	Reserved	0x00

3.5.19 WDT clock source update enable register

This register updates the clock source of the watchdog timer with the new input clock after the WDTCLKSEL register has been written to. In order for the update to take effect at the input of the watchdog timer, first write a zero to the WDTCLKUEN register and then write a one to WDTCLKUEN.

Remark: When switching clock sources, both clocks must be running before the clock source is updated.

Table 26. WDT clock source update enable register (WDTCLKUEN, address 0x4004 80D4) bit description

Bit	Symbol	Value	Description	Reset value
0	ENA		Enable WDT clock source update	0x0
		0	No change	
		1	Update clock source	
31:1	-	-	Reserved	0x00

3.5.20 WDT clock divider register

This register determines the divider values for the watchdog clock wdt_clk.

All information provided in this document is subject to legal disclaimers.
© NXP B.V. 2012. All rights reserved.

Table 27. WDT clock divider register (WDTCLKDIV, address 0x4004 80D8) bit description

Bit	Symbol	Description	Reset value
7:0	DIV	WDT clock divider values 0: Disable WDCLK. 1: Divide by 1. to 255: Divide by 255.	0x00
31:8	-	Reserved	0x00

3.5.21 CLKOUT clock source select register

This register configures the clkout_clk signal to be output on the CLKOUT pin. All three oscillators and the main clock can be selected for the clkout_clk clock.

The CLKOUTCLKUEN register (see Section 3.5.22) must be toggled from LOW to HIGH for the update to take effect.

Remark: When switching clock sources, both clocks must be running before the clock source is updated.

Table 28. CLKOUT clock source select register (CLKOUTCLKSEL, address 0x4004 80E0) bit description

Bit	Symbol	Value	Description	Reset value
1:0	SEL		CLKOUT clock source	0x00
		0x0	IRC oscillator	
		0x1	System oscillator	
		0x2	Watchdog oscillator	
		0x3	Main clock	
31:2	-	-	Reserved	0x00

3.5.22 CLKOUT clock source update enable register

This register updates the clock source of the CLKOUT pin with the new clock after the CLKOUTCLKSEL register has been written to. In order for the update to take effect at the input of the CLKOUT pin, first write a zero to the CLKCLKUEN register and then write a one to CLKCLKUEN.

Remark: When switching clock sources, both clocks must be running before the clock source is updated.

Table 29. CLKOUT clock source update enable register (CLKOUTUEN, address 0x4004 80E4) bit description

Bit	Symbol	Value	Description	Reset value
0	ENA		Enable CLKOUT clock source update	0x0
		0	No change	
		1	Update clock source	
31:1	-	-	Reserved	0x00

All information provided in this document is subject to legal disclaimers.
© NXP B.V. 2012. All rights reserved.

3.5.23 CLKOUT clock divider register

This register determines the divider value for the clock output signal on the CLKOUT pin.

Table 30. CLKOUT clock divider registers (CLKOUTCLKDIV, address 0x4004 80E8) bit description

Bit	Symbol	Description	Reset value
7:0	DIV	Clock output divider values 0: Disable CLKOUT. 1: Divide by 1. to 255: Divide by 255.	0x00
31:8	-	Reserved	0x00

3.5.24 POR captured PIO status register 0

The PIOPORCAP0 register captures the state (HIGH or LOW) of the PIO pins of ports 0,1, and 2 (pins PIO2_0 to PIO2_7) at power-on-reset. Each bit represents the reset state of one GPIO pin. This register is a read-only status register.

Table 31. POR captured PIO status registers 0 (PIOPORCAP0, address 0x4004 8100) bit description

Bit	Symbol	Description	Reset value
11:0	CAPPIO0_n	Raw reset status input PIO0_n: PIO0_11 to PIO0_0	User implementation dependent
23:12	CAPPIO1_n	Raw reset status input PIO1_n: PIO1_11 to PIO1_0	User implementation dependent
31:24	CAPPIO2_n	Raw reset status input PIO2_n: PIO2_7 to PIO2_0	User implementation dependent

3.5.25 POR captured PIO status register 1

The PIOPORCAP1 register captures the state (HIGH or LOW) of the PIO pins of port 2 (PIO2_8 to PIO2_11) and port 3 at power-on-reset. Each bit represents the reset state of one PIO pin. This register is a read-only status register.

Table 32. POR captured PIO status registers 1 (PIOPORCAP1, address 0x4004 8104) bit description

Bit	Symbol	Description	Reset value
0	CAPPIO2_8	Raw reset status input PIO2_8	User implementation dependent
1	CAPPIO2_9	Raw reset status input PIO2_9	User implementation dependent
2	CAPPIO2_10	Raw reset status input PIO2_10	User implementation dependent
3	CAPPIO2_11	Raw reset status input PIO2_11	User implementation dependent
4	CAPPIO3_0	Raw reset status input PIO3_0	User implementation dependent
5	CAPPIO3_1	Raw reset status input PIO3_1	User implementation dependent
6	CAPPIO3_2	Raw reset status input PIO3_2	User implementation dependent
7	CAPPIO3_3	Raw reset status input PIO3_3	User implementation dependent
8	CAPPIO3_4	Raw reset status input PIO3_4	User implementation dependent
9	CAPPIO3_5	Raw reset status input PIO3_5	User implementation dependent
31:10	-	Reserved	-

All information provided in this document is subject to legal disclaimers.
© NXP B.V. 2012. All rights reserved.

3.5.26 BOD control register

The BOD control register selects up to four separate threshold values for sending a BOD interrupt to the NVIC and for forced reset. Reset and interrupt threshold values listed are typical values.

Table 33. BOD control register (BODCTRL, address 0x4004 8150) bit description

Bit	Symbol	Value	Description	Reset value
1:0	BODRSTLEV		BOD reset level	00
		0x0	Level 0: The reset assertion threshold voltage is 1.46 V; the reset de-assertion threshold voltage is 1.63 V.	
		0x1	Level 1: The reset assertion threshold voltage is 2.06 V; the reset de-assertion threshold voltage is 2.15 V.	
		0x2	Level 2: The reset assertion threshold voltage is 2.35 V; the reset de-assertion threshold voltage is 2.43 V.	
		0x3	Level 3: The reset assertion threshold voltage is 2.63 V; the reset de-assertion threshold voltage is 2.71 V.	
3:2	BODINTVAL		BOD interrupt level	00
		0x0	Level 0: Reserved.	
		0x1	Level 1:The interrupt assertion threshold voltage is 2.22 V; the interrupt de-assertion threshold voltage is 2.35 V.	
		0x2	Level 2: The interrupt assertion threshold voltage is 2.52 V; the interrupt de-assertion threshold voltage is 2.66 V.	
		0x3	Level 3: The interrupt assertion threshold voltage is 2.80 V; the interrupt de-assertion threshold voltage is 2.90 V.	
4	BODRSTENA		BOD reset enable	0
		0	Disable reset function.	
		1	Enable reset function.	
31:5	-	-	Reserved	0x00

3.5.27 System tick counter calibration register

This register determines the value of the SYST_CALIB register (see Table 360).

Table 34. System tick timer calibration register (SYSTCKCAL, address 0x4004 8154) bit description

Bit	Symbol	Description	Reset value
25:0	CAL	System tick timer calibration value	0x04
31:26	-	Reserved	0x00

3.5.28 NMI source selection register

The NMI source selection register selects a peripheral interrupts as source for the NMI interrupt of the ARM Cortex-M0 core. For a list of all peripheral interrupts and their IRQ numbers see Table 54. For a description of the NMI functionality, see Section 28.4.3.2.

Remark: See Section 3.1 for LPC111x parts using this register.

All information provided in this document is subject to legal disclaimers.
© NXP B.V. 2012. All rights reserved.

Table 35. NMI source selection register (NMISRC, address 0x4004 8174) bit description

Bit	Symbol	Description	Reset value
4:0	IRQNO	The IRQ number of the interrupt that acts as the Non-Maskable Interrupt (NMI) if bit 31 in this register is 1. See Table 54 for the list of interrupt sources and their IRQ numbers.	0
30:5	-	Reserved	-
31	NMIEN	Write a 1 to this bit to enable the Non-Maskable Interrupt (NMI) source selected by bits 4:0.	0

Note: If the NMISRC register is used to select an interrupt as the source of Non-Maskable interrupts, and the selected interrupt is enabled, one interrupt request can result in both a Non-Maskable and a normal interrupt. Avoid this situation by disabling the normal interrupt in the NVIC, as described in Section 28.6.2.

3.5.29 Start logic edge control register 0

The STARTAPRP0 register controls the start logic inputs of ports 0 (PIO0_0 to PIO0_11) and 1 (PIO1_0). This register selects a falling or rising edge on the corresponding PIO input to produce a falling or rising clock edge, respectively, for the start logic (see Section 3.10.2).

Every bit in the STARTAPRP0 register controls one port input and is connected to one wake-up interrupt in the NVIC. Bit 0 in the STARTAPRP0 register corresponds to interrupt 0, bit 1 to interrupt 1, etc. (see Table 54), up to a total of 13 interrupts.

Remark: Each interrupt connected to a start logic input must be enabled in the NVIC if the corresponding PIO pin is used to wake up the chip from Deep-sleep mode.

Table 36. Start logic edge control register 0 (STARTAPRP0, address 0x4004 8200) bit description

Bit	Symbol	Description	Reset value
11:0	APRPIO0_n	Edge select for start logic input PIO0_n: PIO0_11 to PIO0_0 0 = Falling edge 1 = Rising edge	0x0
12	APRPIO1_0	Edge select for start logic input PIO1_0 0 = Falling edge 1 = Rising edge	0x0
31:13	-	Reserved. Do not write a 1 to reserved bits in this register.	0x0

3.5.30 Start logic signal enable register 0

This STARTERP0 register enables or disables the start signal bits in the start logic. The bit assignment is identical to Table 36.

All information provided in this document is subject to legal disclaimers.
© NXP B.V. 2012. All rights reserved.

Table 37. Start logic signal enable register 0 (STARTERP0, address 0x4004 8204) bit description

Bit	Symbol	Description	Reset value
11:0	ERPIO0_n	Enable start signal for start logic input PIO0_n: PIO0_11 to PIO0_0 0 = Disabled 1 = Enabled	0x0
12	ERPIO1_0	Enable start signal for start logic input PIO1_0 0 = Disabled 1 = Enabled	0x0
31:13	-	Reserved. Do not write a 1 to reserved bits in this register.	0x0

3.5.31 Start logic reset register 0

Writing a one to a bit in the STARTRSRP0CLR register resets the start logic state. The bit assignment is identical to Table 36. The start-up logic uses the input signals to generate a clock edge for registering a start signal. This clock edge (falling or rising) sets the interrupt for waking up from Deep-sleep mode. Therefore, the start-up logic states must be cleared before being used.

Table 38. Start logic reset register 0 (STARTRSRP0CLR, address 0x4004 8208) bit description

Bit	Symbol	Description	Reset value
11:0	RSRPIO0_n	Start signal reset for start logic input PIO0_n:PIO0_11 to PIO0_0 0 = Do nothing. 1 = Writing 1 resets the start signal.	n/a
12	RSRPIO1_0	Start signal reset for start logic input PIO1_0 0 = Do nothing. 1 = Writing 1 resets the start signal.	n/a
31:13	-	Reserved. Do not write a 1 to reserved bits in this register.	n/a

3.5.32 Start logic status register 0

This register reflects the status of the enabled start signal bits. The bit assignment is identical to Table 36. Each bit (if enabled) reflects the state of the start logic, i.e. whether or not a wake-up signal has been received for a given pin.

Table 39. Start logic status register 0 (STARTSRP0, address 0x4004 820C) bit description

Bit	Symbol	Description	Reset value
11:0	SRPIO0_n	Start signal status for start logic input PIO0_n: PIO0_11 to PIO0_0 0 = No start signal received. 1 = Start signal pending.	n/a
12	SRPIO1_0	Start signal status for start logic input PIO1_0 0 = No start signal received. 1 = Start signal pending.	n/a
31:13	-	Reserved	n/a

All information provided in this document is subject to legal disclaimers.
© NXP B.V. 2012. All rights reserved.

3.5.33 Deep-sleep mode configuration register

This register controls the behavior of the WatchDog (WD) oscillator and the BOD circuit when the device enters Deep-sleep mode.

This register **must be initialized at least once before entering Deep-sleep mode** with one of the four values shown in Table 40:

Table 40. Allowed values for PDSLEEPCFG register

Configuration	**WD oscillator on**	**WD oscillator off**
BOD on	PDSLEEPCFG = 0x0000 18B7	PDSLEEPCFG = 0x0000 18F7
BOD off	PDSLEEPCFG = 0x0000 18BF	PDSLEEPCFG = 0x0000 18FF

Remark: Failure to initialize and program this register correctly may result in undefined behavior of the microcontroller. The values listed in Table 40 are the only values allowed for PDSLEEPCFG register.

To select the appropriate power configuration for Deep-sleep mode, consider the following:

- BOD: Leaving the BOD circuit enabled will protect the part from a low voltage event occurring while the part is in Deep-sleep mode. However, the BOD circuit causes an additional current drain in Deep-sleep mode.
- WD oscillator: The watchdog oscillator can be left running in Deep-sleep mode to provide a clock for the watchdog timer or a general purpose timer if they are needed for timing a wake-up event (see Section 3.10.3 for details). In this case, the watchdog oscillator analog output frequency must be set to its lowest value (bits FREQSEL in the WDTOSCCTRL = 0001, see Table 13) and all peripheral clocks other than the timer clock must be disabled in the SYSAHBCLKCTRL register (see Table 21) before entering Deep-sleep mode.

  The watchdog oscillator, if running, contributes an additional current drain in Deep-sleep mode.

Remark: Reserved bits in this register must always be written as indicated. This register must be initialized correctly before entering Deep-sleep mode.

Table 41. Deep-sleep configuration register (PDSLEEPCFG, address 0x4004 8230) bit description

Bit	Symbol	Value	Description	Reset value
2:0	NOTUSED		Reserved. **Always write these bits as 111.**	0
3	BOD_PD		BOD power-down control in Deep-sleep mode, see Table 40.	0
		0	Powered	
		1	Powered down	
5:4	NOTUSED		Reserved. **Always write these bits as 11.**	0
6	WDTOSC_PD		Watchdog oscillator power control in Deep-sleep mode, see Table 40.	0
		0	Powered	
		1	Powered down	
7	NOTUSED		Reserved. **Always write this bit as 1.**	0

All information provided in this document is subject to legal disclaimers. © NXP B.V. 2012. All rights reserved.

Table 41. Deep-sleep configuration register (PDSLEEPCFG, address 0x4004 8230) bit description *…continued*

Bit	Symbol	Value	Description	Reset value
10:8	NOTUSED		Reserved. **Always write these bits as 000.**	0
12:11	NOTUSED		Reserved. **Always write these bits as 11.**	0
31:13	-	0	Reserved	0

3.5.34 Wake-up configuration register

The bits in this register determine the state the chip enters when it is waking up from Deep-sleep mode.

By default, the IRC and flash memory are powered and running and the BOD circuit is enabled when the chip wakes up from Deep-sleep mode.

Remark: Reserved bits must be always written as indicated.

Table 42. Wake-up configuration register (PDAWAKECFG, address 0x4004 8234) bit description

Bit	Symbol	Value	Description	Reset value
0	IRCOUT_PD		IRC oscillator output wake-up configuration	0
		0	Powered	
		1	Powered down	
1	IRC_PD		IRC oscillator power-down wake-up configuration	0
		0	Powered	
		1	Powered down	
2	FLASH_PD		Flash wake-up configuration	0
		0	Powered	
		1	Powered down	
3	BOD_PD		BOD wake-up configuration	0
		0	Powered	
		1	Powered down	
4	ADC_PD		ADC wake-up configuration	1
		0	Powered	
		1	Powered down	
5	SYSOSC_PD		System oscillator wake-up configuration	1
		0	Powered	
		1	Powered down	
6	WDTOSC_PD		Watchdog oscillator wake-up configuration	1
		0	Powered	
		1	Powered down	
7	SYSPLL_PD		System PLL wake-up configuration	1
		0	Powered	
		1	Powered down	
8	-		Reserved. **Always write this bit as 1.**	1

All information provided in this document is subject to legal disclaimers. © NXP B.V. 2012. All rights reserved.

Table 42. Wake-up configuration register (PDAWAKECFG, address 0x4004 8234) bit description *…continued*

Bit	Symbol	Value	Description	Reset value
9	-		Reserved. **Always write this bit as 0.**	0
10	-		Reserved. **Always write this bit as 1.**	1
11	-		Reserved. **Always write this bit as 1.**	1
12	-		Reserved. **Always write this bit as 0.**	0
15:13	-		Reserved. **Always write these bits as 111.**	111
31:16	-	-	Reserved	-

3.5.35 Power-down configuration register

The bits in the PDRUNCFG register control the power to the various analog blocks. This register can be written to at any time while the chip is running, and a write will take effect immediately with the exception of the power-down signal to the IRC.

To avoid glitches when powering down the IRC, the IRC clock is automatically switched off at a clean point. Therefore, for the IRC a delay is possible before the power-down state takes effect.

By default, the IRC and flash memory are powered and running and the BOD circuit is enabled.

Remark: Reserved bits must be always written as indicated.

Table 43. Power-down configuration register (PDRUNCFG, address 0x4004 8238) bit description

Bit	Symbol	Value	Description	Reset value
0	IRCOUT_PD		IRC oscillator output power-down	0
		0	Powered	
		1	Powered down	
1	IRC_PD		IRC oscillator power-down	0
		0	Powered	
		1	Powered down	
2	FLASH_PD		Flash power-down	0
		0	Powered	
		1	Powered down	
3	BOD_PD		BOD power-down	0
		0	Powered	
		1	Powered down	
4	ADC_PD		ADC power-down	1
		0	Powered	
		1	Powered down	
5	SYSOSC_PD		System oscillator power-down	1
		0	Powered	
		1	Powered down	

All information provided in this document is subject to legal disclaimers. © NXP B.V. 2012. All rights reserved.

Table 43. Power-down configuration register (PDRUNCFG, address 0x4004 8238) bit description *...continued*

Bit	Symbol	Value	Description	Reset value
6	WDTOSC_PD		Watchdog oscillator power-down	1
		0	Powered	
		1	Powered down	
7	SYSPLL_PD		System PLL power-down	1
		0	Powered	
		1	Powered down	
8	-		Reserved. **Always write this bit as 1.**	1
9	-		Reserved. **Always write this bit as 0.**	0
10	-		Reserved. **Always write this bit as 1.**	1
11	-		Reserved. **Always write this bit as 1.**	1
12	-		Reserved. **Always write this bit as 0.**	0
15:13	-		Reserved. **Always write these bits as 111.**	111
31:16	-	-	Reserved	-

3.5.36 Device ID register

This device ID register is a read-only register and contains the part ID for each LPC111x/LPC11Cxx part. This register is also read by the ISP/IAP commands (Section 26.5.11).

Remark: This register returns the part ID for parts of the LPC1100, LPC1100C, and LPC1100L series only. Use ISP/IAP to obtain the part ID for the LPC1100XL series.

The part IDs for the various parts are shown in the following list. Some parts have two valid part IDs.

- LPC1110
  - 0x0A07 102B = LPC1110FD20
  - 0x1A07 102B = LPC1110FD20
- LPC1111
  - 0x0A16 D02B = LPC1111FDH20/002
  - 0x1A16 D02B = LPC1111FDH20/002
  - 0x041E 502B = LPC1111FHN33/101
  - 0x2516 D02B = LPC1111FHN33/101; LPC1111FHN33/102
  - 0x0416 502B = LPC1111FHN33/201
  - 0x2516 902B = LPC1111FHN33/201; LPC1111FHN33/202
- LPC1112
  - 0x0A24 902B = LPC1112FD20/102; LPC1112FDH20/102; LPC1112FDH28/102
  - 0x1A24 902B = LPC1112FD20/102; LPC1112FDH20/102; LPC1112FDH28/102
  - 0x042D 502B = LPC1112FHN33/101
  - 0x2524 D02B = LPC1112FHN33/101; LPC1112FHN33/102

All information provided in this document is subject to legal disclaimers. © NXP B.V. 2012. All rights reserved.

  - 0x0425 502B = LPC1112FHN33/201
  - 0x2524 902B = LPC1112FHN33/201; LPC1112FHN33/202; LPC1112FHI33/202; LPC1112FHN24/202
- LPC1113
  - 0x0434 502B = LPC1113FHN33/201
  - 0x2532 902B = LPC1113FHN33/201; LPC1113FHN33/202
  - 0x0434 102B = LPC1113FHN33/301; LPC1113FBD48/301
  - 0x2532 102B = LPC1113FHN33/301; LPC1113FHN33/302; LPC1113FBD48/301; LPC1113FBD48/302
- LPC1114
  - 0x0A40 902B = LPC1114FDH28/102; LPC1114FN28/102
  - 0x1A40 902B = LPC1114FDH28/102; LPC1114FN28/102
  - 0x0444 502B = LPC1114FHN33/201
  - 0x2540 902B = LPC1114FHN33/201; LPC1114FHN33/202
  - 0x0444 102B = LPC1114FHN33/301; LPC1114FBD48/301
  - 0x2540 102B = LPC1114FHN33/301; LPC1114FHN33/302; LPC1114FHI33/302; LPC1114FBD48/301; LPC1114FBD48/302; LPC11D14FBD100/302
- LPC11Cxx
  - 0x1440 102B = LPC11C14/FBD48/301
  - 0x1431 102B = LPC11C22/FBD48/301
  - 0x1430 102B = LPC11C24/FBD48/301

Table 44. Device ID register (DEVICE_ID, address 0x4004 83F4) bit description

Bit	Symbol	Description	Reset value
31:0	DEVICEID	Part ID numbers for LPC111x/LPC11Cxx parts	part-dependent

3.6 Reset

Reset has four sources on the LPC111x/LPC11Cxx: the $\overline{\text{RESET}}$ pin, Watchdog Reset, Power-On Reset (POR), and Brown Out Detect (BOD). In addition, there is an ARM software reset.

The $\overline{\text{RESET}}$ pin is a Schmitt trigger input pin. Assertion of chip Reset by any source, once the operating voltage attains a usable level, starts the IRC causing reset to remain asserted until the external Reset is de-asserted, the oscillator is running, and the flash controller has completed its initialization.

On the assertion of any reset source (ARM software reset, POR, BOD reset, External reset, and Watchdog reset), the following processes are initiated:

1. The IRC starts up. After the IRC-start-up time (maximum of 6 μs on power-up), the IRC provides a stable clock output.
2. The flash is powered up. This takes approximately 100 μs. Then the flash initialization sequence is started.

All information provided in this document is subject to legal disclaimers. © NXP B.V. 2012. All rights reserved.

3. The boot code in the ROM starts. The boot code performs the boot tasks and may jump to the flash.

When the internal Reset is removed, the processor begins executing at address 0, which is initially the Reset vector mapped from the boot block. At that point, all of the processor and peripheral registers have been initialized to predetermined values.

3.7 Start-up behavior

See Figure 9 for the start-up timing after reset. The IRC is the default clock at Reset and provides a clean system clock shortly after the supply voltage reaches the threshold value of 1.8 V.

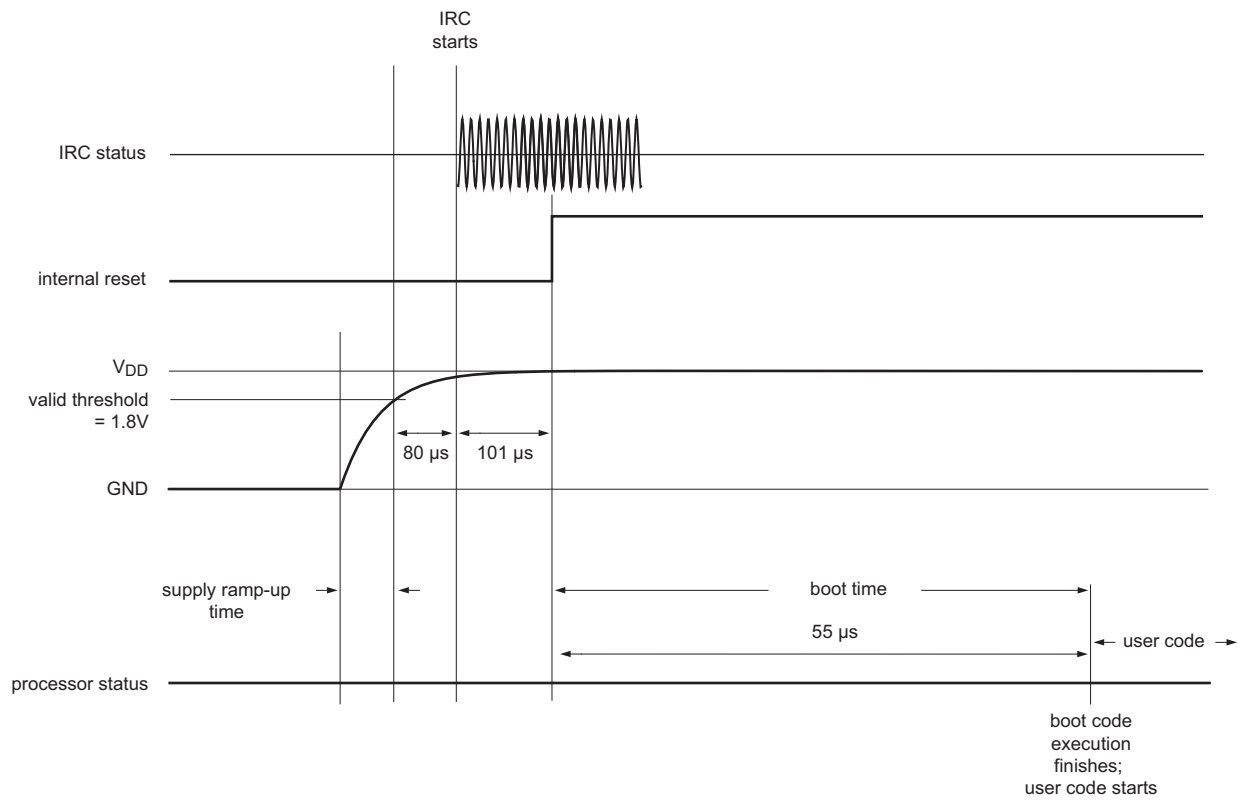

Fig 9. Start-up timing

3.8 Brown-out detection

The LPC111x/LPC11Cxx includes up to levels for monitoring the voltage on the V_{DD} pin. If this voltage falls below one of the selected levels, the BOD asserts an interrupt signal to the NVIC. This signal can be enabled for interrupt in the Interrupt Enable Register in the NVIC in order to cause a CPU interrupt; if not, software can monitor the signal by reading the NVIC status register (see Table 54). Four threshold levels can be selected to cause a forced reset of the chip (see Table 33).

All information provided in this document is subject to legal disclaimers.
© NXP B.V. 2012. All rights reserved.

3.9 Power management

The LPC111x/LPC11Cxx support a variety of power control features. In Active mode, when the chip is running, power and clocks to selected peripherals can be optimized for power consumption. In addition, there are three special modes of processor power reduction: Sleep mode, Deep-sleep mode, and Deep power-down mode.

Remark: The Debug mode is not supported in Sleep, Deep-sleep, or Deep power-down modes.

3.9.1 Active mode

In Active mode, the ARM Cortex-M0 core and memories are clocked by the system clock, and peripherals are clocked by the system clock or a dedicated peripheral clock.

The chip is in Active mode after reset and the default power configuration is determined by the reset values of the PDRUNCFG and SYSAHBCLKCTRL registers. The power configuration can be changed during run time.

3.9.1.1 Power configuration in Active mode

Power consumption in Active mode is determined by the following configuration choices:

- The SYSAHBCLKCTRL register controls which memories and peripherals are running (Table 21).
- The power to various analog blocks (PLL, oscillators, the ADC, the BOD circuit, and the flash block) can be controlled at any time individually through the PDRUNCFG register (Table 43).
- The clock source for the system clock can be selected from the IRC (default), the system oscillator, or the watchdog oscillator (see Figure 8 and related registers).
- The system clock frequency can be selected by the SYSPLLCTRL (Table 10) and the SYSAHBCLKDIV register (Table 20).
- Selected peripherals (UART, SPI0/1, WDT) use individual peripheral clocks with their own clock dividers. The peripheral clocks can be shut down through the corresponding clock divider registers (Table 22 to Table 24).

3.9.2 Sleep mode

In Sleep mode, the system clock to the ARM Cortex-M0 core is stopped, and execution of instructions is suspended until either a reset or an enabled interrupt occurs.

Peripheral functions, if selected to be clocked in the SYSAHBCLKCTRL register, continue operation during Sleep mode and may generate interrupts to cause the processor to resume execution. Sleep mode eliminates dynamic power used by the processor itself, memory systems and their related controllers, and internal buses. The processor state and registers, peripheral registers, and internal SRAM values are maintained, and the logic levels of the pins remain static.

3.9.2.1 Power configuration in Sleep mode

Power consumption in Sleep mode is configured by the same settings as in Active mode:

- The clock remains running.

All information provided in this document is subject to legal disclaimers.
© NXP B.V. 2012. All rights reserved.

- The system clock frequency remains the same as in Active mode, but the processor is not clocked.
- Analog and digital peripherals are selected as in Active mode.

3.9.2.2 Programming Sleep mode

The following steps must be performed to enter Sleep mode:

1. The DPDEN bit in the PCON register must be set to zero (Table 49).
2. The SLEEPDEEP bit in the ARM Cortex-M0 SCR register must be set to zero, see (Table 452).
3. Use the ARM Cortex-M0 Wait-For-Interrupt (WFI) instruction.

3.9.2.3 Wake-up from Sleep mode

Sleep mode is exited automatically when an interrupt enabled by the NVIC arrives at the processor or a reset occurs. After wake-up due to an interrupt, the microcontroller returns to its original power configuration defined by the contents of the PDRUNCFG and the SYSAHBCLKDIV registers. If a reset occurs, the microcontroller enters the default configuration in Active mode.

3.9.3 Deep-sleep mode

In Deep-sleep mode, the system clock to the processor is disabled as in Sleep mode. All analog blocks are powered down, except for the BOD circuit and the watchdog oscillator, which must be selected or deselected during Deep-sleep mode in the PDSLEEPCFG register.

Deep-sleep mode eliminates all power used by the flash and analog peripherals and all dynamic power used by the processor itself, memory systems and their related controllers, and internal buses. The processor state and registers, peripheral registers, and internal SRAM values are maintained, and the logic levels of the pins remain static.

3.9.3.1 Power configuration in Deep-sleep mode

Power consumption in Deep-sleep mode is determined by the Deep-sleep power configuration setting in the PDSLEEPCFG (Table 41) register:

- The only clock source available in Deep-sleep mode is the watchdog oscillator. The watchdog oscillator can be left running in Deep-sleep mode if required for timer-controlled wake-up (see Section 3.10.3). All other clock sources (the IRC and system oscillator) and the system PLL are shut down. The watchdog oscillator analog output frequency must be set to the lowest value of its analog clock output (bits FREQSEL in the WDTOSCCTRL = 0001, see Table 13).
- The BOD circuit can be left running in Deep-sleep mode if required by the application.
- If the watchdog oscillator is running in Deep-sleep mode, only the watchdog timer or one of the general-purpose timers should be enabled in SYSAHBCLKCTRL register to minimize power consumption.

3.9.3.2 Programming Deep-sleep mode

The following steps must be performed to enter Deep-sleep mode:

1. The DPDEN bit in the PCON register must be set to zero (Table 49).

All information provided in this document is subject to legal disclaimers. © NXP B.V. 2012. All rights reserved.

2. Select the power configuration in Deep-sleep mode in the PDSLEEPCFG (Table 41) register.
   a. If a timer-controlled wake-up is needed, ensure that the watchdog oscillator is powered in the PDRUNCFG register and switch the clock source to WD oscillator in the MAINCLKSEL register (Table 18).
   b. If no timer-controlled wake-up is needed and the watchdog oscillator is shut down, ensure that the IRC is powered in the PDRUNCFG register and switch the clock source to IRC in the MAINCLKSEL register (Table 18). This ensures that the system clock is shut down glitch-free.
3. Select the power configuration after wake-up in the PDAWAKECFG (Table 42) register.
4. If an external pin is used for wake-up, enable and clear the wake-up pin in the start logic registers (Table 36 to Table 39), and enable the start logic interrupt in the NVIC.
5. In the SYSAHBCLKCTRL register (Table 21), disable all peripherals except counter/timer or WDT if needed.
6. Write one to the SLEEPDEEP bit in the ARM Cortex-M0 SCR register (Table 452).
7. Use the ARM WFI instruction.

3.9.3.3 Wake-up from Deep-sleep mode

The microcontroller can wake up from Deep-sleep mode in the following ways:

- Signal on an external pin. For this purpose, pins PIO0_0 to PIO0_11 and PIO1_0 can be enabled as inputs to the start logic. The start logic does not require any clocks and generates the interrupt if enabled in the NVIC to wake up from Deep-sleep mode.
- Input signal to the start logic created by a match event on one of the general purpose timer external match outputs. The pin holding the timer match function must be enabled as start logic input in the NVIC, the corresponding timer must be enabled in the SYSAHBCLKCTRL register, and the watchdog oscillator must be running in Deep-sleep mode (for details see Section 3.10.3).
- Reset from the BOD circuit. In this case, the BOD circuit must be enabled in the PDSLEEPCFG register, and the BOD reset must be enabled in the BODCTRL register (Table 33).
- Reset from the watchdog timer. In this case, the watchdog oscillator must be running in Deep-sleep mode (see PDSLEEPCFG register), and the WDT must be enabled in the SYSAHBCLKCTRL register.
- A reset signal from the external $\overline{\text{RESET}}$ pin.

Remark: If the watchdog oscillator is running in Deep-sleep mode, its frequency determines the wake-up time causing the wake-up time to be longer than waking up with the IRC.

3.9.4 Deep power-down mode

In Deep power-down mode, power and clocks are shut off to the entire chip with the exception of the WAKEUP pin.

During Deep power-down mode, the contents of the SRAM and registers are not retained except for a small amount of data which can be stored in the five 32-bit general purpose registers of the PMU block.

All information provided in this document is subject to legal disclaimers. © NXP B.V. 2012. All rights reserved.

All functional pins are tri-stated in Deep power-down mode except for the WAKEUP pin.

3.9.4.1 Power configuration in Deep power-down mode

Deep power-down mode has no configuration options. All clocks, the core, and all peripherals are powered down. Only the WAKEUP pin is powered.

3.9.4.2 Programming Deep power-down mode

The following steps must be performed to enter Deep power-down mode:

1. Write one to the DPDEN bit in the PCON register (see Table 49).
2. Store data to be retained in the general purpose registers (Table 50).
3. Write one to the SLEEPDEEP bit in the ARM Cortex-M0 SCR register (Table 452).
4. Ensure that the IRC is powered by setting bits IRCOUT_PD and IRC_PD to zero in the PDRUNCFG register before entering Deep power-down mode.

   Remark: This step is part dependent. See Section 3.1 for part specific details.
5. Use the ARM WFI instruction.

Remark: The WAKEUP pin must be pulled HIGH externally before entering Deep power-down mode.

3.9.4.3 Wake-up from Deep power-down mode

Pulling the WAKEUP pin LOW wakes up the LPC111x/LPC11Cxx from Deep power-down, and the chip goes through the entire reset process (Section 3.6). The minimum pulse width for the HIGH-to-LOW transition on the WAKEUP pin is 50 ns.

Follow these steps to wake up the chip from Deep power-down mode:

1. A wake-up signal is generated when a HIGH-to-LOW transition occurs externally on the WAKEUP pin with a pulse length of at least 50 ns while the part is in Deep power-down mode.
   - The PMU will turn on the on-chip voltage regulator. When the core voltage reaches the power-on-reset (POR) trip point, a system reset will be triggered and the chip re-boots.
   - All registers except the GPREG0 to GPREG4and PCON will be in their reset state.
2. Once the chip has booted, read the deep power-down flag in the PCON register (Table 49) to verify that the reset was caused by a wake-up event from Deep power-down.
3. Clear the deep power-down flag in the PCON register (Table 49).
4. (Optional) Read the stored data in the general purpose registers (Table 50 and Table 51).
5. Set up the PMU for the next Deep power-down cycle.

Remark: The $\overline{\text{RESET}}$ pin has no functionality in Deep power-down mode.

All information provided in this document is subject to legal disclaimers.
© NXP B.V. 2012. All rights reserved.

3.10 Deep-sleep mode details

3.10.1 IRC oscillator

The IRC is the only oscillator on the LPC111x/LPC11Cxx that can always shut down glitch-free. Therefore it is recommended that the user switches the clock source to IRC before the chip enters Deep-sleep mode.

3.10.2 Start logic

The Deep-sleep mode is exited when the start logic indicates an interrupt to the ARM core. The port pins PIO0_0 to PIO0_11 and PIO1_0 are connected to the start logic and serve as wake-up pins. The user must program the start logic registers for each input to set the appropriate edge polarity for the corresponding wake-up event. Furthermore, the interrupts corresponding to each input must be enabled in the NVIC. Interrupts 0 to 12 in the NVIC correspond to 13 PIO pins (see Section 3.5.29).

The start logic does not require a clock to run because it uses the input signals on the enabled pins to generate a clock edge when enabled. Therefore, the start logic signals should be cleared (see Table 38) before use.

The start logic can also be used in Active mode to provide a vectored interrupt using the LPC111x/LPC11Cxx's input pins.

3.10.3 Using the general purpose counter/timers to create a self-wake-up event

If enabled in Deep-sleep mode through the SYSAHBCLKCFG register, the counter/timers can count clock cycles of the watchdog oscillator and create a match event when the number of cycles equals a preset match value. The match event causes the corresponding match output pin to go HIGH, LOW, or toggle. The state of the match output pin is also monitored by the start logic and can trigger a wake-up interrupt if that pin is enabled in the NVIC and the start logic trigger is configured accordingly in the start logic edge control register (see Table 36).

The following steps must be performed to configure the counter/timer and create a timed Deep-sleep self-wake-up event:

1. Configure the port pin as match output in the IOCONFIG block. Select from pins PIO0_1 or PIO0_8 to PIO0_11, which are inputs to the start logic and also hold a match output function.
2. In the corresponding counter/timer, set the match value, and configure the match output for the selected pin.
3. Select the watchdog oscillator to run in Deep-sleep mode in the PDSLEEPCFG register.
4. Switch the clock source to the watchdog oscillator in the MAINCLKSEL register (Table 18) and ensure the watchdog oscillator is powered in the PDRUNCFG register.
5. Enable the pin, configure its edge detect function, and reset the start logic in the start logic registers (Table 36 to Table 39), and enable the interrupt in the NVIC.
6. Disable all other peripherals in the SYSAHBCLKCTRL register.
7. Ensure that the DPDEN bit in the PCON register is set to zero (Table 49).

All information provided in this document is subject to legal disclaimers.
© NXP B.V. 2012. All rights reserved.

8. Write one to the SLEEPDEEP bit in the ARM Cortex-M0 SCR register (Table 452).
9. Start the counter/timer.
10. Use the ARM WFI instruction to enter Deep-sleep mode.

3.11 System PLL functional description

The LPC111x/LPC11Cxx uses the system PLL to create the clocks for the core and peripherals.

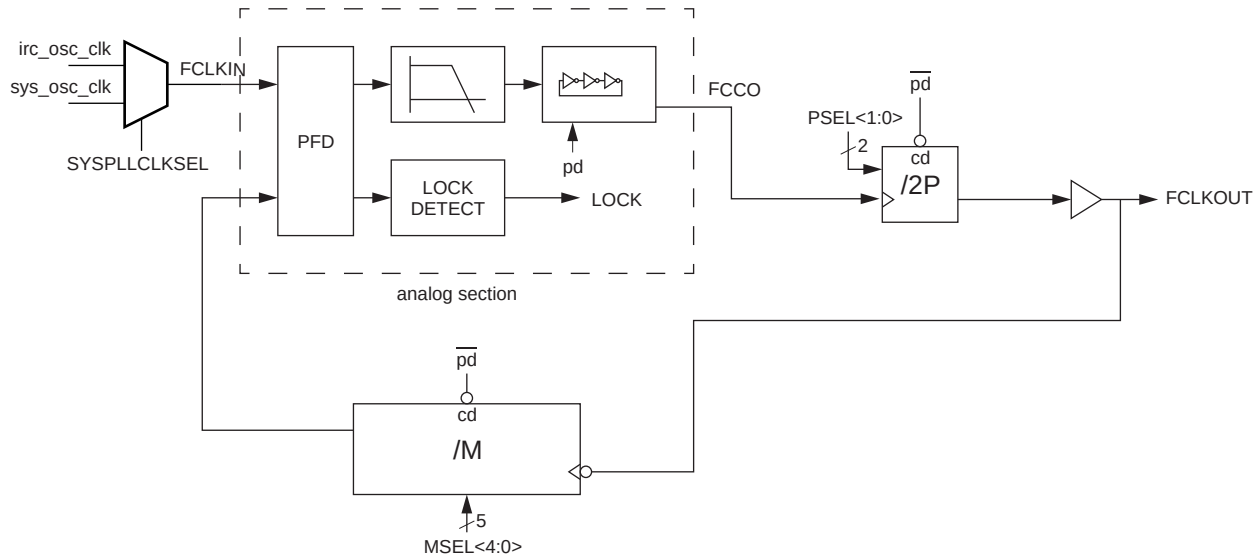

Fig 10. System PLL block diagram

The block diagram of this PLL is shown in Figure 10. The input frequency range is 10 MHz to 25 MHz. The input clock is fed directly to the Phase-Frequency Detector (PFD). This block compares the phase and frequency of its inputs, and generates a control signal when phase and/ or frequency do not match. The loop filter filters these control signals and drives the current controlled oscillator (CCO), which generates the main clock and optionally two additional phases. The CCO frequency range is 156 MHz to 320 MHz.These clocks are either divided by 2×P by the programmable post divider to create the output clock(s), or are sent directly to the output(s). The main output clock is then divided by M by the programmable feedback divider to generate the feedback clock. The output signal of the phase-frequency detector is also monitored by the lock detector, to signal when the PLL has locked on to the input clock.

Remark: The divider values for P and M must be selected so that the PLL output clock frequency FCLKOUT is lower than 100 MHz.

3.11.1 Lock detector

The lock detector measures the phase difference between the rising edges of the input and feedback clocks. Only when this difference is smaller than the so called “lock criterion” for more than eight consecutive input clock periods, the lock output switches from low to high. A single too large phase difference immediately resets the counter and causes the lock signal to drop (if it was high). Requiring eight phase measurements in a

All information provided in this document is subject to legal disclaimers.

© NXP B.V. 2012. All rights reserved.

row to be below a certain figure ensures that the lock detector will not indicate lock until both the phase and frequency of the input and feedback clocks are very well aligned. This effectively prevents false lock indications, and thus ensures a glitch free lock signal.

3.11.2 Power-down control

To reduce the power consumption when the PLL clock is not needed, a Power-down mode has been incorporated. This mode is enabled by setting the SYSPLL_PD bits to one in the Power-down configuration register (Table 43). In this mode, the internal current reference will be turned off, the oscillator and the phase-frequency detector will be stopped and the dividers will enter a reset state. While in Power-down mode, the lock output will be low to indicate that the PLL is not in lock. When the Power-down mode is terminated by setting the SYSPLL_PD bits to zero, the PLL will resume its normal operation and will make the lock signal high once it has regained lock on the input clock.

3.11.3 Divider ratio programming

Post divider

The division ratio of the post divider is controlled by the PSEL bits. The division ratio is two times the value of P selected by PSEL bits as shown in Table 10. This guarantees an output clock with a 50% duty cycle.

Feedback divider

The feedback divider's division ratio is controlled by the MSEL bits. The division ratio between the PLL's output clock and the input clock is the decimal value on MSEL bits plus one, as specified in Table 10.

Changing the divider values

Changing the divider ratio while the PLL is running is not recommended. As there is no way to synchronize the change of the MSEL and PSEL values with the dividers, the risk exists that the counter will read in an undefined value, which could lead to unwanted spikes or drops in the frequency of the output clock. The recommended way of changing between divider settings is to power down the PLL, adjust the divider settings and then let the PLL start up again.

3.11.4 Frequency selection

The PLL frequency equations use the following parameters (also see Figure 8):

Table 45. PLL frequency parameters

Parameter	System PLL
FCLKIN	Frequency of sys_pllclkin (input clock to the system PLL) from the SYSPLLCLKSEL multiplexer (see Section 3.5.9).
FCCO	Frequency of the Current Controlled Oscillator (CCO); 156 to 320 MHz.
FCLKOUT	Frequency of sys_pllclkout. FCLKOUT must be < 100 MHz.
P	System PLL post divider ratio; PSEL bits in SYSPLLCTRL (see Section 3.5.3).
M	System PLL feedback divider register; MSEL bits in SYSPLLCTRL (see Section 3.5.3).

All information provided in this document is subject to legal disclaimers.
© NXP B.V. 2012. All rights reserved.

3.11.4.1 Normal mode

In normal mode the post divider is enabled, giving a 50% duty cycle clock with the following frequency relations:

$$FCLKOUT = M \times FCLKIN = (FCCO)/(2 \times P) \quad (1)$$

To select the appropriate values for M and P, it is recommended to follow these steps:

1. Specify the input clock frequency FCLKIN.
2. Calculate M to obtain the desired output frequency FCLKOUT with M = FCLKOUT / FCLKIN.
3. Find a value so that FCCO = 2 × P × FCLKOUT.
4. Verify that all frequencies and divider values conform to the limits specified in Table 10.
5. Ensure that FCLKOUT < 100 MHz.

Table 46 shows how to configure the PLL for a 12 MHz crystal oscillator using the SYSPLLCTRL register (Table 10). The main clock is equivalent to the system clock if the system clock divider SYSAHBCLKDIV is set to one (see Table 20).

Table 46. PLL configuration examples

PLL input clock sys_pllclkin (FCLKIN)	Main clock (FCLKOUT)	MSEL bits Table 10	M divider value	PSEL bits Table 10	P divider value	FCCO frequency
12 MHz	48 MHz	00011	4	01	2	192 MHz
12 MHz	36 MHz	00010	3	10	4	288 MHz
12 MHz	24 MHz	00001	2	10	4	192 MHz

3.11.4.2 Power-down mode

In this mode, the internal current reference is turned off, the oscillator and the phase-frequency detector are stopped, and the dividers enter a reset state. While in Power-down mode, the lock output is be LOW to indicate that the PLL is not in lock. When the Power-down mode is terminated by setting the SYSPLL_PD bit to zero in the Power-down configuration register (Table 43), the PLL resumes its normal operation and asserts the lock signal HIGH once it has regained lock on the input clock.

3.12 Flash memory access

Depending on the system clock frequency, access to the flash memory can be configured with various access times by writing to the FLASHCFG register at address 0x4003 C010. This register is part of the flash configuration block (see Figure 6).

Remark: Improper setting of this register may result in incorrect operation of the LPC111x/LPC11Cxx flash memory.

All information provided in this document is subject to legal disclaimers. © NXP B.V. 2012. All rights reserved.

Table 47. Flash configuration register (FLASHCFG, address 0x4003 C010) bit description

Bit	Symbol	Value	Description	Reset value
1:0	FLASHTIM		Flash memory access time. FLASHTIM +1 is equal to the number of system clocks used for flash access.	10
		00	1 system clock flash access time (for system clock frequencies of up to 20 MHz).	
		01	2 system clocks flash access time (for system clock frequencies of up to 40 MHz).	
		10	3 system clocks flash access time (for system clock frequencies of up to 50 MHz).	
		11	Reserved.	
31:2	-	-	Reserved. **User software must not change the value of these bits. Bits 31:2 must be written back exactly as read**.	-

All information provided in this document is subject to legal disclaimers.

© NXP B.V. 2012. All rights reserved.

4.1 How to read this chapter

Remark: For parts LPC11(D)1x/102/202/302, also refer to Chapter 5 for power control.

4.2 Introduction

The PMU controls the Deep power-down mode. Four general purpose register in the PMU can be used to retain data during Deep power-down mode.

4.3 Register description

Table 48. Register overview: PMU (base address 0x4003 8000)

Name	Access	Address offset	Description	Reset value
PCON	R/W	0x000	Power control register	0x0
GPREG0	R/W	0x004	General purpose register 0	0x0
GPREG1	R/W	0x008	General purpose register 1	0x0
GPREG2	R/W	0x00C	General purpose register 2	0x0
GPREG3	R/W	0x010	General purpose register 3	0x0
GPREG4	R/W	0x014	General purpose register 4	0x0

4.3.1 Power control register

The power control register selects whether one of the ARM Cortex-M0 controlled power-down modes (Sleep mode or Deep-sleep mode) or the Deep power-down mode is entered and provides the flags for Sleep or Deep-sleep modes and Deep power-down modes respectively. See Section 3.9 for details on how to enter the power-down modes.

Table 49. Power control register (PCON, address 0x4003 8000) bit description

Bit	Symbol	Value	Description	Reset value
0	-	-	Reserved. Do not write 1 to this bit.	0x0
1	DPDEN		Deep power-down mode enable	0
		0	ARM WFI will enter Sleep or Deep-sleep mode (clock to ARM Cortex-M0 core turned off).	
		1	ARM WFI will enter Deep-power down mode (ARM Cortex-M0 core powered-down).	
7:2	-	-	Reserved. Do not write ones to this bit.	0x0

All information provided in this document is subject to legal disclaimers.
© NXP B.V. 2012. All rights reserved.

Table 49. Power control register (PCON, address 0x4003 8000) bit description *…continued*

Bit	Symbol	Value	Description	Reset value
8	SLEEPFLAG		Sleep mode flag	0
		0	Read: No power-down mode entered. LPC111x/LPC11Cxx is in Active mode. Write: No effect.	
		1	Read: Sleep/Deep-sleep or Deep power-down mode entered. Write: Writing a 1 clears the SLEEPFLAG bit to 0.	
10:9	-	-	Reserved. Do not write ones to this bit.	0x0
11	DPDFLAG		Deep power-down flag	0x0
		0	Read: Deep power-down mode **not** entered. Write: No effect.	0x0
		1	Read: Deep power-down mode entered. Write: Clear the Deep power-down flag.	0x0
31:12	-	-	Reserved. Do not write ones to this bit.	0x0

4.3.2 General purpose registers 0 to 3

The general purpose registers retain data through the Deep power-down mode when power is still applied to the V_{DD} pin but the chip has entered Deep power-down mode. Only a “cold” boot when all power has been completely removed from the chip will reset the general purpose registers.

Table 50. General purpose registers 0 to 3 (GPREG0 - GPREG3, address 0x4003 8004 to 0x4003 8010) bit description

Bit	Symbol	Description	Reset value
31:0	GPDATA	Data retained during Deep power-down mode.	0x0

4.3.3 General purpose register 4

The general purpose register 4 retains data through the Deep power-down mode when power is still applied to the V_{DD} pin but the chip has entered Deep power-down mode. Only a “cold” boot, when all power has been completely removed from the chip, will reset the general purpose registers.

Remark: If there is a possibility that the external voltage applied on pin V_{DD} drops below 2.2 V during Deep power-down, the hysteresis of the WAKEUP input pin has to be disabled in this register before entering Deep power-down mode in order for the chip to wake up.

Table 51. General purpose register 4 (GPREG4, address 0x4003 8014) bit description

Bit	Symbol	Value	Description	Reset value
9:0	-	-	Reserved. Do not write ones to this bit.	0x0

All information provided in this document is subject to legal disclaimers.

© NXP B.V. 2012. All rights reserved.

Table 51. General purpose register 4 (GPREG4, address 0x4003 8014) bit description

Bit	Symbol	Value	Description	Reset value
10	WAKEUPHYS		WAKEUP pin hysteresis enable	0x0
		1	Hysteresis for WAKEUP pin enabled.	
		0	Hysteresis for WAKUP pin disabled.	
31:11	GPDATA		Data retained during Deep power-down mode.	0x0

4.4 Functional description

For details of entering and exiting Deep power-down mode, see Section 3.9.4.

All information provided in this document is subject to legal disclaimers.
© NXP B.V. 2012. All rights reserved.

5.1 How to read this chapter

The power profiles are available for parts LPC11(D)1x/102/202/302 only (LPC1100L series).

5.2 Features

- Includes ROM-based application services
- Power Management services
- Clocking services

5.3 Description

The API calls to the ROM are performed by executing functions which are pointed by a pointer within the ROM Driver Table. Figure 11 shows the pointer structure used to call the Power Profiles API.

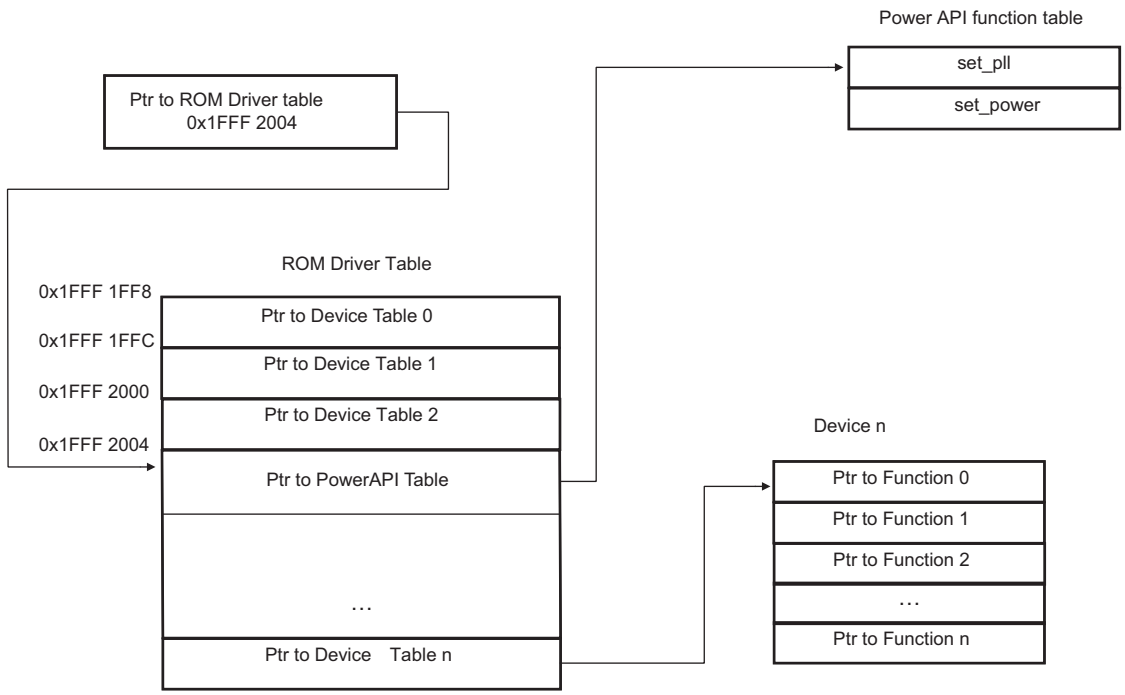

Fig 11. Power profiles pointer structure

All information provided in this document is subject to legal disclaimers.
© NXP B.V. 2012. All rights reserved.

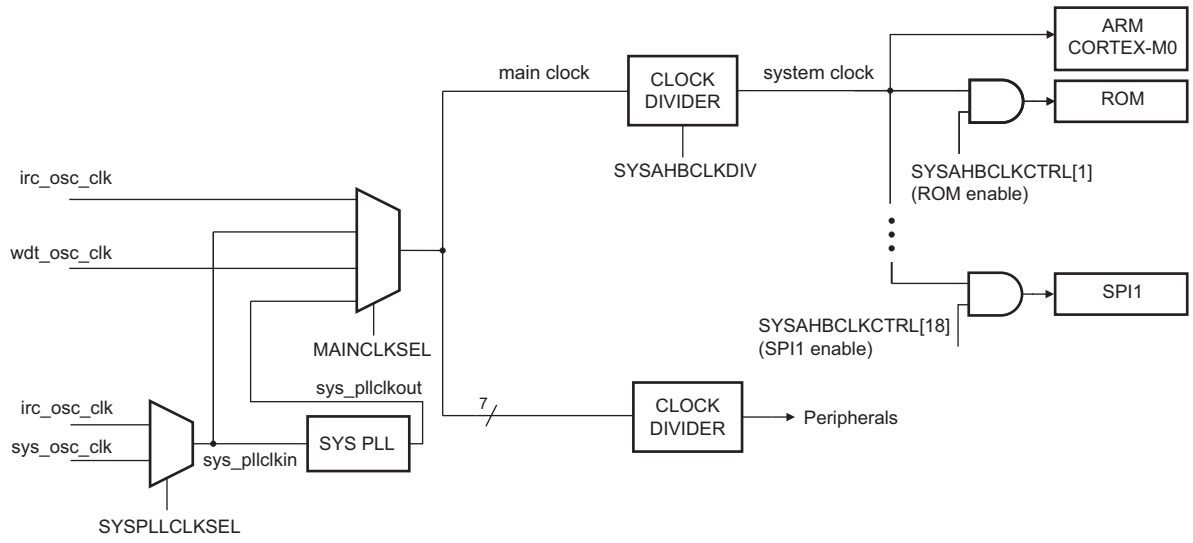

Fig 12. LPC111x/102/202/302 clock configuration for power API use

5.4 Definitions

The following elements have to be defined in an application that uses the power profiles:

```
typedef struct _PWRD {
        void (*set_pll)(unsigned int cmd[], unsigned int resp[]);
        void (*set_power)(unsigned int cmd[], unsigned int resp[]);
} PWRD;
typedef struct _ROM {
        const PWRD * pWRD;
} ROM;
ROM ** rom = (ROM **) (0x1FFF1FF8 + 3 * sizeof(ROM**));
unsigned int command[4], result[2];
```

5.5 Clocking routine

5.5.1 set_pll

This routine sets up the system PLL according to the calling arguments. If the expected clock can be obtained by simply dividing the system PLL input, *set_pll* bypasses the PLL to lower system power consumption.

Remark: Before this routine is invoked, the PLL clock source (IRC/system oscillator) must be selected (Table 16), the main clock source must be set to the input clock to the system PLL (Table 18) and the system/AHB clock divider must be set to 1 (Table 20).

set_pll attempts to find a PLL setup that matches the calling parameters. Once a combination of a feedback divider value (SYSPLLCTRL, M), a post divider ratio (SYSPLLCTRL, P) and the system/AHB clock divider (SYSAHBCLKDIV) is found, *set_pll* applies the selected values and switches the main clock source selection to the system PLL clock out (if necessary).

All information provided in this document is subject to legal disclaimers.
© NXP B.V. 2012. All rights reserved.

The routine returns a result code that indicates if the system PLL was successfully set (PLL_CMD_SUCCESS) or not (in which case the result code identifies what went wrong). The current system frequency value is also returned. The application should use this information to adjust other clocks in the device (the SSP, UART, and WDT clocks, and/or clockout).

Table 52. set_pll routine

Routine	set_pll
Input	**Param0:** system PLL input frequency (in kHz) **Param1:** expected system clock (in kHz) **Param2:** mode (CPU_FREQ_EQU, CPU_FREQ_LTE, CPU_FREQ_GTE, CPU_FREQ_APPROX) **Param3:** system PLL lock time-out
Result	**Result0:** PLL_CMD_SUCCESS | PLL_INVALID_FREQ | PLL_INVALID_MODE | PLL_FREQ_NOT_FOUND | PLL_NOT_LOCKED **Result1:** system clock (in kHz)

The following definitions are needed when making set_pll power routine calls:

```
/* set_pll mode options */
#define     CPU_FREQ_EQU        0
#define     CPU_FREQ_LTE        1
#define     CPU_FREQ_GTE        2
#define     CPU_FREQ_APPROX     3
/* set_pll result0 options */
#define     PLL_CMD_SUCCESS     0
#define     PLL_INVALID_FREQ    1
#define     PLL_INVALID_MODE    2
#define     PLL_FREQ_NOT_FOUND  3
#define     PLL_NOT_LOCKED      4
```

For a simplified clock configuration scheme see Figure 12. For more details see Figure 8.

5.5.1.1 Param0: system PLL input frequency and Param1: expected system clock

set_pll looks for a setup in which the system PLL clock does not exceed 50 MHz. It easily finds a solution when the ratio between the expected system clock and the system PLL input frequency is an integer value, but it can also find solutions in other cases.

The system PLL input frequency (*Param0*) must be between 10000 to 25000 kHz (10 MHz to 25 MHz) inclusive. The expected system clock (*Param1*) must be between 1 and 50000 kHz inclusive. If either of these requirements is not met, *set_pll* returns PLL_INVALID_FREQ and returns *Param0* as *Result1* since the PLL setting is unchanged.

5.5.1.2 Param2: mode

The first priority of *set_pll* is to find a setup that generates the system clock at exactly the rate specified in *Param1*. If it is unlikely that an exact match can be found, input parameter mode (*Param2*) should be used to specify if the actual system clock can be less than or equal, greater than or equal or approximately the value specified as the expected system clock (*Param1*).

A call specifying CPU_FREQ_EQU will only succeed if the PLL can output exactly the frequency requested in *Param1*.

All information provided in this document is subject to legal disclaimers.

© NXP B.V. 2012. All rights reserved.

CPU_FREQ_LTE can be used if the requested frequency should not be exceeded (such as overall current consumption and/or power budget reasons).

CPU_FREQ_GTE helps applications that need a minimum level of CPU processing capabilities.

CPU_FREQ_APPROX results in a system clock that is as close as possible to the requested value (it may be greater than or less than the requested value).

If an illegal mode is specified, *set_pll* returns PLL_INVALID_MODE. If the expected system clock is out of the range supported by this routine, *set_pll* returns PLL_FREQ_NOT_FOUND. In these cases the current PLL setting is not changed and *Param0* is returned as *Result1*.

5.5.1.3 Param3: system PLL lock time-out

It should take no more than 100 μs for the system PLL to lock if a valid configuration is selected. If *Param3* is zero, *set_pll* will wait indefinitely for the PLL to lock. A non-zero value indicates how many times the code will check for a successful PLL lock event before it returns PLL_NOT_LOCKED. In this case the PLL settings are unchanged and *Param0* is returned as *Result1*.

Remark: The time it takes the PLL to lock depends on the selected PLL input clock source (IRC/system oscillator) and its characteristics. The selected source can experience more or less jitter depending on the operating conditions such as power supply and/or ambient temperature. This is why it is suggested that when a good known clock source is used and a PLL_NOT_LOCKED response is received, the set_pll routine should be invoked several times before declaring the selected PLL clock source invalid.

Hint: setting *Param3* equal to the system PLL frequency [Hz] divided by 10000 will provide more than enough PLL lock-polling cycles.

5.5.1.4 Code examples

The following examples illustrate some of the features of *set_pll* discussed above.

5.5.1.4.1 Invalid frequency (device maximum clock rate exceeded)

```
command[0] = 12000;
command[1] = 60000;
command[2] = CPU_FREQ_EQU;
command[3] = 0;
(*rom)->pWRD->set_pll(command, result);
```

The above code specifies a 12 MHz PLL input clock and a system clock of exactly 60 MHz. The application was ready to infinitely wait for the PLL to lock. But the expected system clock of 60 MHz exceeds the maximum of 50 MHz. Therefore *set_pll* returns PLL_INVALID_FREQ in *result[0]* and 12000 in *result[1]* without changing the PLL settings.

5.5.1.4.2 Invalid frequency selection (system clock divider restrictions)

```
command[0] = 12000;
command[1] = 40;
command[2] = CPU_FREQ_LTE;
```


All information provided in this document is subject to legal disclaimers. © NXP B.V. 2012. All rights reserved.

```
command[3] = 0;
(*rom)->pWRD->set_pll(command, result);
```

The above code specifies a 12 MHz PLL input clock, a system clock of no more than 40 kHz and no time-out while waiting for the PLL to lock. Since the maximum divider value for the system clock is 255 and running at 40 kHz would need a divide by value of 300, *set_pll* returns PLL_INVALID_FREQ in *result[0]* and 12000 in *result[1]* without changing the PLL settings.

5.5.1.4.3 Exact solution cannot be found (PLL)

```
command[0] = 12000;
command[1] = 25000;
command[2] = CPU_FREQ_EQU;
command[3] = 0;
(*rom)->pWRD->set_pll(command, result);
```

The above code specifies a 12 MHz PLL input clock and a system clock of exactly 25 MHz. The application was ready to infinitely wait for the PLL to lock. Since there is no valid PLL setup within earlier mentioned restrictions, *set_pll* returns PLL_FREQ_NOT_FOUND in *result[0]* and 12000 in *result[1]* without changing the PLL settings.

5.5.1.4.4 System clock less than or equal to the expected value

```
command[0] = 12000;
command[1] = 25000;
command[2] = CPU_FREQ_LTE;
command[3] = 0;
(*rom)->pWRD->set_pll(command, result);
```

The above code specifies a 12 MHz PLL input clock, a system clock of no more than 25 MHz and no locking time-out. *set_pll* returns PLL_CMD_SUCCESS in *result[0]* and 24000 in *result[1]*. The new system clock is 24 MHz.

5.5.1.4.5 System clock greater than or equal to the expected value

```
command[0] = 12000;
command[1] = 25000;
command[2] = CPU_FREQ_GTE;
command[3] = 0;
(*rom)->pWRD->set_pll(command, result);
```

The above code specifies a 12 MHz PLL input clock, a system clock of at least 25 MHz and no locking time-out. *set_pll* returns PLL_CMD_SUCCESS in *result[0]* and 36000 in *result[1]*. The new system clock is 36 MHz.

5.5.1.4.6 System clock approximately equal to the expected value

```
command[0] = 12000;
command[1] = 16500;
command[2] = CPU_FREQ_APPROX;
command[3] = 0;
(*rom)->pWRD->set_pll(command, result);
```


All information provided in this document is subject to legal disclaimers.

© NXP B.V. 2012. All rights reserved.

The above code specifies a 12 MHz PLL input clock, a system clock of approximately 16.5 MHz and no locking time-out. *set_pll* returns PLL_CMD_SUCCESS in *result[0]* and 16000 in *result[1]*. The new system clock is 16 MHz.

5.6 Power routine

5.6.1 set_power

This routine configures the device's internal power control settings according to the calling arguments. The goal is to reduce active power consumption while maintaining the feature of interest to the application close to its optimum.

Remark: The set_power routine was designed for systems employing the configuration of SYSAHBCLKDIV = 1 (System clock divider register, see Table 20 and Figure 12). Using this routine in an application with the system clock divider not equal to 1 might not improve microcontroller's performance as much as in setups when the main clock and the system clock are running at the same rate.

set_power returns a result code that reports whether the power setting was successfully changed or not.

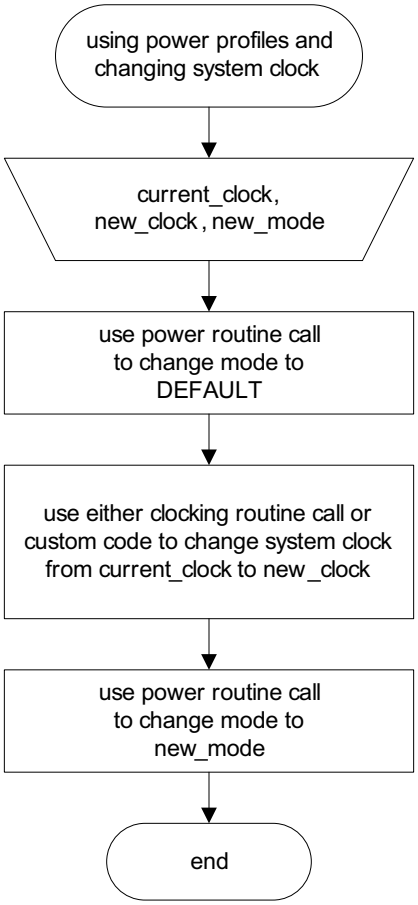

Fig 13. Power profiles usage

All information provided in this document is subject to legal disclaimers.

© NXP B.V. 2012. All rights reserved.

Table 53. set_power routine

Routine	set_power
Input	**Param0:** main clock (in MHz) **Param1:** mode (PWR_DEFAULT, PWR_CPU_PERFORMANCE, PWR_EFFICIENCY, PWR_LOW_CURRENT) **Param2:** system clock (in MHz)
Result	**Result0:** PWR_CMD_SUCCESS | PWR_INVALID_FREQ | PWR_INVALID_MODE

The following definitions are needed for set_power routine calls:

```
/* set_power mode options */
#define     PWR_DEFAULT          0
#define     PWR_CPU_PERFORMANCE  1
#define     PWR_EFFICIENCY       2
#define     PWR_LOW_CURRENT      3
/* set_power result0 options */
#define     PWR_CMD_SUCCESS      0
#define     PWR_INVALID_FREQ     1
#define     PWR_INVALID_MODE     2
```

For a simplified clock configuration scheme see Figure 12. For more details see Figure 8.

5.6.1.1 Param0: main clock

The main clock is the clock rate the microcontroller uses to source the system's and the peripherals' clock. It is configured by either a successful execution of the clocking routine call or a similar code provided by the user. This operand must be an integer between 1 to 50 MHz inclusive. If a value out of this range is supplied, *set_power* returns PWR_INVALID_FREQ and does not change the power control system.

5.6.1.2 Param1: mode

The input parameter mode (*Param1*) specifies one of four available power settings. If an illegal selection is provided, *set_power* returns PWR_INVALID_MODE and does not change the power control system.

PWR_DEFAULT keeps the device in a baseline power setting similar to its reset state.

PWR_CPU_PERFORMANCE configures the microcontroller so that it can provide more processing capability to the application. CPU performance is 30% better than the default option.

PWR_EFFICIENCY setting was designed to find a balance between active current and the CPU's ability to execute code and process data. In this mode the device outperforms the default mode both in terms of providing higher CPU performance and lowering active current.

PWR_LOW_CURRENT is intended for those solutions that focus on lowering power consumption rather than CPU performance.

5.6.1.3 Param2: system clock

The system clock is the clock rate at which the microcontroller core is running when *set_power* is called. This parameter is an integer between from 1 and 50 MHz inclusive.

All information provided in this document is subject to legal disclaimers.

© NXP B.V. 2012. All rights reserved.

5.6.1.4 Code examples

The following examples illustrate some of the *set_power* features discussed above.

5.6.1.4.1 Invalid frequency (device maximum clock rate exceeded)

```
command[0] = 60;
command[1] = PWR_CPU_PERFORMANCE;
command[2] = 60;
(*rom)->pWRD->set_power(command, result);
```

The above setup would be used in a system running at the main and system clock of 60 MHz, with a need for maximum CPU processing power. Since the specified 60 MHz clock is above the 50 MHz maximum, *set_power* returns PWR_INVALID_FREQ in *result[0]* without changing anything in the existing power setup.

5.6.1.4.2 An applicable power setup

```
command[0] = 24;
command[1] = PWR_CPU_EFFICIENCY;
command[2] = 24;
(*rom)->pWRD->set_power(command, result);
```

The above code specifies that an application is running at the main and system clock of 24 MHz with emphasis on efficiency. *set_power* returns PWR_CMD_SUCCESS in *result[0]* after configuring the microcontroller's internal power control features.

All information provided in this document is subject to legal disclaimers.
© NXP B.V. 2012. All rights reserved.

6.1 How to read this chapter

The C_CAN controller interrupt is available on parts LPC11Cxx only.

6.2 Introduction

The Nested Vectored Interrupt Controller (NVIC) is an integral part of the Cortex-M0. The tight coupling to the CPU allows for low interrupt latency and efficient processing of late arriving interrupts.

6.3 Features

- Nested Vectored Interrupt Controller that is an integral part of the ARM Cortex-M0
- Tightly coupled interrupt controller provides low interrupt latency
- Controls system exceptions and peripheral interrupts
- The NVIC supports 32 vectored interrupts
- 4 programmable interrupt priority levels with hardware priority level masking
- Software interrupt generation

6.4 Interrupt sources

Table 54 lists the interrupt sources for each peripheral function. Each peripheral device may have one or more interrupt lines to the Vectored Interrupt Controller. Each line may represent more than one interrupt source. There is no significance or priority about what line is connected where, except for certain standards from ARM.

See Section 28.6.2 for the NVIC register bit descriptions.

Table 54. Connection of interrupt sources to the Vectored Interrupt Controller

Exception Number	Vector Offset	Function	Flag(s)
12 to 0		start logic wake-up interrupts	Each interrupt is connected to a PIO input pin serving as wake-up pin from Deep-sleep mode; Interrupt 0 to 11 correspond to PIO0_0 to PIO0_11 and interrupt 12 corresponds to PIO1_0; see Section 3.5.29.
13		C_CAN	C_CAN interrupt
14		SPI/SSP1	Tx FIFO half empty Rx FIFO half full Rx Timeout Rx Overrun
15		I^2C	SI (state change)

All information provided in this document is subject to legal disclaimers.

© NXP B.V. 2012. All rights reserved.

Table 54. Connection of interrupt sources to the Vectored Interrupt Controller

Exception Number	Vector Offset	Function	Flag(s)
16		CT16B0	Match 0 - 2 Capture 0
17		CT16B1	Match 0 - 1 Capture 0
18		CT32B0	Match 0 - 3 Capture 0
19		CT32B1	Match 0 - 3 Capture 0
20		SPI/SSP0	Tx FIFO half empty Rx FIFO half full Rx Timeout Rx Overrun
21		UART	Rx Line Status (RLS) Transmit Holding Register Empty (THRE) Rx Data Available (RDA) Character Time-out Indicator (CTI) End of Auto-Baud (ABEO) Auto-Baud Time-Out (ABTO)
22		-	Reserved
23		-	Reserved
24		ADC	A/D Converter end of conversion
25		WDT	Watchdog interrupt (WDINT)
26		BOD	Brown-out detect
27		-	Reserved
28		PIO_3	GPIO interrupt status of port 3
29		PIO_2	GPIO interrupt status of port 2
30		PIO_1	GPIO interrupt status of port 1
31		PIO_0	GPIO interrupt status of port 0

All information provided in this document is subject to legal disclaimers.

© NXP B.V. 2012. All rights reserved.

7.1 How to read this chapter

Remark: This chapter applies to parts in the following series (see Table 1):

- LPC1100
- LPC1100L
- LPC1100C
- LPC11D14

Pin configuration

The implementation of the I/O configuration registers varies for different LPC111x/LPC11Cxx parts and packages. Table 56 shows which IOCON registers are used on the different packages.

C_CAN pins

- For the LPC11C12/C14, functions PIO3_4 and PIO3_5 are not available. Instead, two pins are dedicated to the C_CAN receive and transmit functions (see Table 56) without pull-up or pull-down resistors. The C_CAN pins have no programmable pin configuration.
- For the LPC11C22/C24, pins PIO1_9, PIO2_4, PIO2_5, and PIO2_9 are not available and are replaced by the on-chip CAN transceiver pins. The CAN transceiver pins have no programmable pin configuration.

Pseudo open-drain function

For the LPC11(D)1x/102/202/302, a pseudo open-drain mode can be selected in the IOCON registers for each digital pin except the I2C pins (see Figure 14). The open-drain mode is not available for the LPC111x/101/201/301 parts.

Pull-up level

If the pull-up resistor is enabled (default), all non-I2C pins are pulled up to 2.6 V for LPC111x/101/201/301 parts and pulled up to 3.3 V for LPC11Cxx parts and LPC111x/102/202/302 (V_{DD} = 3.3 V).

7.2 Features

The I/O configuration registers control the electrical characteristics of the pads. The following features are programmable:

- Pin function.
- Internal pull-up/pull-down resistor or bus keeper function.
- Hysteresis.
- Analog input or digital mode for pads hosting the ADC inputs.
- I^2C mode for pads hosting the I^2C-bus function.

All information provided in this document is subject to legal disclaimers.
© NXP B.V. 2012. All rights reserved.

- Pseudo open-drain mode for non-I2C pins (see Section 7.1 for part specific details).

7.3 General description

The IOCON registers control the function (GPIO or peripheral function), the input mode, and the hysteresis of all PIOn_m pins. In addition, the I^2C-bus pins can be configured for different I^2C-bus modes. If a pin is used as input pin for the ADC, an analog input mode can be selected.

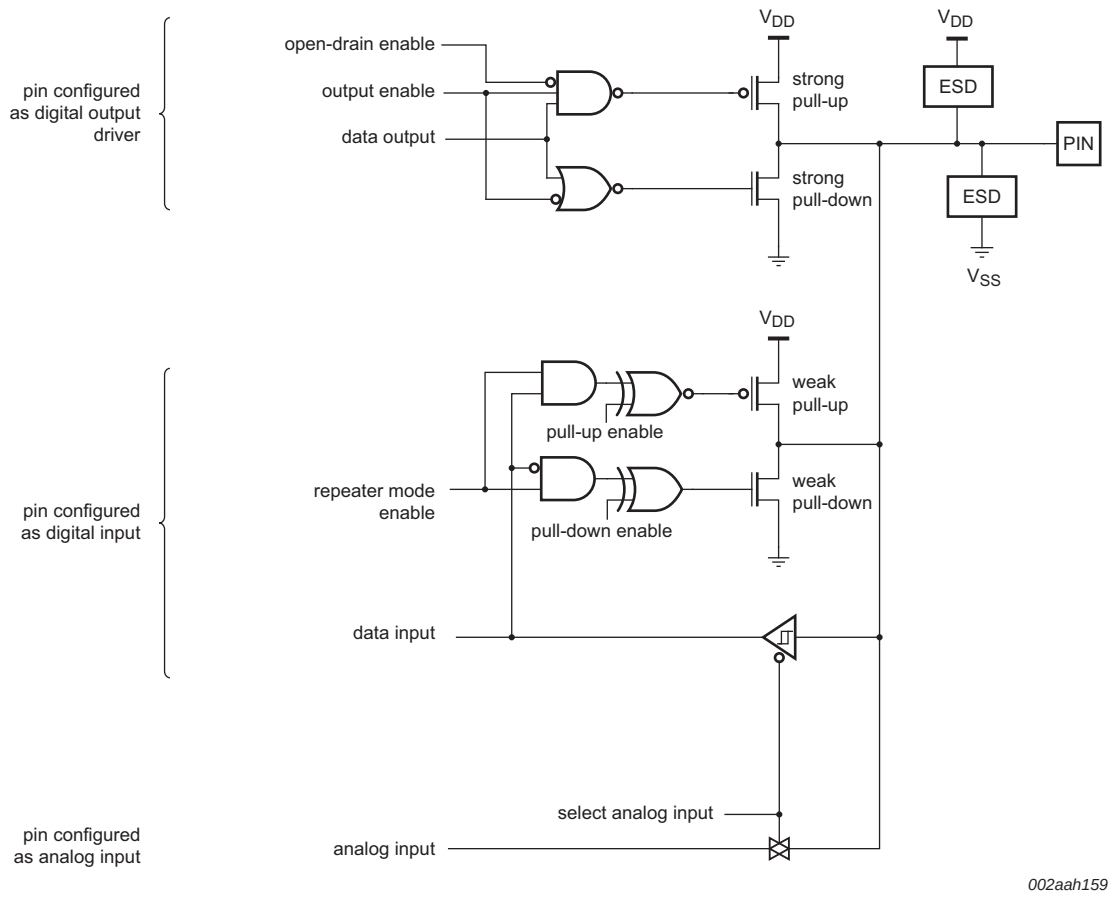

For open-drain mode, see Section 7.1.

Fig 14. Standard I/O pin configuration

7.3.1 Pin function

The FUNC bits in the IOCON registers can be set to GPIO (FUNC = 000) or to a peripheral function. If the pins are GPIO pins, the GPIOnDIR registers determine whether the pin is configured as an input or output (see Section 12.3.2). For any peripheral function, the pin direction is controlled automatically depending on the pin's functionality. The GPIOnDIR registers have no effect for peripheral functions.

All information provided in this document is subject to legal disclaimers.

© NXP B.V. 2012. All rights reserved.

7.3.2 Pin mode

The MODE bits in the IOCON register allow the selection of on-chip pull-up or pull-down resistors for each pin or select the repeater mode.

The possible on-chip resistor configurations are pull-up enabled, pull-down enabled, or no pull-up/pull-down. The default value is pull-up enabled. See Section 7.1 for part specific details.

The repeater mode enables the pull-up resistor if the pin is at a logic HIGH and enables the pull-down resistor if the pin is at a logic LOW. This causes the pin to retain its last known state if it is configured as an input and is not driven externally. The state retention is not applicable to the Deep power-down mode. Repeater mode may typically be used to prevent a pin from floating (and potentially using significant power if it floats to an indeterminate state) if it is temporarily not driven.

7.3.3 Hysteresis

The input buffer for digital functions can be configured with hysteresis or as plain buffer through the IOCON registers (see the *LPC111x and LPC11Cx data sheets* for details).

If the external pad supply voltage V_{DD} is between 2.5 V and 3.6 V, the hysteresis buffer can be enabled or disabled. If V_{DD} is below 2.5 V, the hysteresis buffer must be **disabled** to use the pin in input mode.

7.3.4 A/D-mode

In A/D-mode, the digital receiver is disconnected to obtain an accurate input voltage for analog-to-digital conversions. This mode can be selected in those IOCON registers that control pins with an analog function. If A/D mode is selected, Hysteresis and Pin mode settings have no effect.

For pins without analog functions, the A/D-mode setting has no effect.

7.3.5 I^2C mode

If the I^2C function is selected by the FUNC bits of registers IOCON_PIO0_4 (Table 67) and IOCON_PIO0_5 (Table 68), then the I^2C-bus pins can be configured for different I^2C-modes:

- Standard mode/Fast-mode I^2C with input glitch filter (this includes an open-drain output according to the I^2C-bus specification).
- Fast-mode Plus with input glitch filter (this includes an open-drain output according to the I^2C-bus specification). In this mode, the pins function as high-current sinks.
- Standard open-drain I/O functionality without input filter.

Remark: Either Standard mode/Fast-mode I^2C or Standard I/O functionality should be selected if the pin is used as GPIO pin.

All information provided in this document is subject to legal disclaimers.
© NXP B.V. 2012. All rights reserved.

7.3.6 Open-drain Mode

When output is selected, either by selecting a special function in the FUNC field, or by selecting GPIO function for a pin having a 1 in its GPIODIR register, a 1 in the OD bit selects open-drain operation, that is, a 1 disables the high-drive transistor. This option has no effect on the primary I^2C pins.

Remark: The open-drain mode is not available on all parts (see Section 7.1).

7.4 Register description

The I/O configuration registers control the PIO port pins, the inputs and outputs of all peripherals and functional blocks, the I^2C-bus pins, and the ADC input pins.

Each port pin PIOn_m has one IOCON register assigned to control the pin's function and electrical characteristics.

Some input functions (SCK0, $\overline{DSR}$, $\overline{DCD}$, and $\overline{RI}$) are multiplexed to several physical pins. The IOCON_LOC registers select the pin location for each of these functions.

Remark: The IOCON registers are listed in order of their memory locations in Table 55, which correspond to the order of their physical pin numbers in the LQFP48 package starting at the upper left corner with pin 1 (PIO2_6). See Table 56 for a listing of IOCON registers ordered by port number.

The IOCON location registers are used to select a physical pin for multiplexed functions.

Remark: Note that once the pin location has been selected, the function still must be configured in the corresponding IOCON registers for the function to be usable on that pin.

Table 55. Register overview: I/O configuration (base address 0x4004 4000)

Name	Access	Address offset	Description	Reset value	Reference
IOCON_PIO2_6	R/W	0x000	I/O configuration for pin PIO2_6	0xD0	Table 57
-	R/W	0x004	Reserved	-	-
IOCON_PIO2_0	R/W	0x008	I/O configuration for pin PIO2_0/$\overline{DTR}$/SSEL1	0xD0	Table 58
IOCON_RESET_PIO0_0	R/W	0x00C	I/O configuration for pin $\overline{RESET}$/PIO0_0	0xD0	Table 59
IOCON_PIO0_1	R/W	0x010	I/O configuration for pin PIO0_1/CLKOUT/CT32B0_MAT2	0xD0	Table 60
IOCON_PIO1_8	R/W	0x014	I/O configuration for pin PIO1_8/CT16B1_CAP0	0xD0	Table 61
-	R/W	0x018	Reserved	-	-
IOCON_PIO0_2	R/W	0x01C	I/O configuration for pin PIO0_2/SSEL0/CT16B0_CAP0	0xD0	Table 62
IOCON_PIO2_7	R/W	0x020	I/O configuration for pin PIO2_7	0xD0	Table 63
IOCON_PIO2_8	R/W	0x024	I/O configuration for pin PIO2_8	0xD0	Table 64
IOCON_PIO2_1	R/W	0x028	I/O configuration for pin PIO2_1/$\overline{DSR}$/SCK1	0xD0	Table 65
IOCON_PIO0_3	R/W	0x02C	I/O configuration for pin PIO0_3	0xD0	Table 66
IOCON_PIO0_4	R/W	0x030	I/O configuration for pin PIO0_4/SCL	0x00	Table 67

All information provided in this document is subject to legal disclaimers.
© NXP B.V. 2012. All rights reserved.

Table 55. Register overview: I/O configuration (base address 0x4004 4000)

Name	Access	Address offset	Description	Reset value	Reference
IOCON_PIO0_5	R/W	0x034	I/O configuration for pin PIO0_5/SDA	0x00	Table 68
IOCON_PIO1_9	R/W	0x038	I/O configuration for pin PIO1_9/CT16B1_MAT0	0xD0	Table 69
IOCON_PIO3_4	R/W	0x03C	I/O configuration for pin PIO3_4	0xD0	Table 70
IOCON_PIO2_4	R/W	0x040	I/O configuration for pin PIO2_4	0xD0	Table 71
IOCON_PIO2_5	R/W	0x044	I/O configuration for pin PIO2_5	0xD0	Table 72
IOCON_PIO3_5	R/W	0x048	I/O configuration for pin PIO3_5	0xD0	Table 73
IOCON_PIO0_6	R/W	0x04C	I/O configuration for pin PIO0_6/SCK0	0xD0	Table 74
IOCON_PIO0_7	R/W	0x050	I/O configuration for pin PIO0_7/$\overline{\text{CTS}}$	0xD0	Table 75
IOCON_PIO2_9	R/W	0x054	I/O configuration for pin PIO2_9	0xD0	Table 76
IOCON_PIO2_10	R/W	0x058	I/O configuration for pin PIO2_10	0xD0	Table 77
IOCON_PIO2_2	R/W	0x05C	I/O configuration for pin PIO2_2/$\overline{\text{DCD}}$/MISO1	0xD0	Table 78
IOCON_PIO0_8	R/W	0x060	I/O configuration for pin PIO0_8/MISO0/CT16B0_MAT0	0xD0	Table 79
IOCON_PIO0_9	R/W	0x064	I/O configuration for pin PIO0_9/MOSI0/CT16B0_MAT1	0xD0	Table 80
IOCON_SWCLK_PIO0_10	R/W	0x068	I/O configuration for pin SWCLK/PIO0_10/ SCK0/CT16B0_MAT2	0xD0	Table 81
IOCON_PIO1_10	R/W	0x06C	I/O configuration for pin PIO1_10/AD6/CT16B1_MAT1	0xD0	Table 82
IOCON_PIO2_11	R/W	0x070	I/O configuration for pin PIO2_11/SCK0	0xD0	Table 83
IOCON_R_PIO0_11	R/W	0x074	I/O configuration for pin R/PIO0_11/AD0/CT32B0_MAT3	0xD0	Table 84
IOCON_R_PIO1_0	R/W	0x078	I/O configuration for pin R/PIO1_0/AD1/CT32B1_CAP0	0xD0	Table 85
IOCON_R_PIO1_1	R/W	0x07C	I/O configuration for pin R/PIO1_1/AD2/CT32B1_MAT0	0xD0	Table 86
IOCON_R_PIO1_2	R/W	0x080	I/O configuration for pin R/PIO1_2/AD3/CT32B1_MAT1	0xD0	Table 87
IOCON_PIO3_0	R/W	0x084	I/O configuration for pin PIO3_0/$\overline{\text{DTR}}$	0xD0	Table 88
IOCON_PIO3_1	R/W	0x088	I/O configuration for pin PIO3_1/$\overline{\text{DSR}}$	0xD0	Table 89
IOCON_PIO2_3	R/W	0x08C	I/O configuration for pin PIO2_3/$\overline{\text{RI}}$/MOSI1	0xD0	Table 90
IOCON_SWDIO_PIO1_3	R/W	0x090	I/O configuration for pin SWDIO/PIO1_3/AD4/CT32B1_MAT2	0xD0	Table 91
IOCON_PIO1_4	R/W	0x094	I/O configuration for pin PIO1_4/AD5/CT32B1_MAT3	0xD0	Table 92
IOCON_PIO1_11	R/W	0x098	I/O configuration for pin PIO1_11/AD7	0xD0	Table 93
IOCON_PIO3_2	R/W	0x09C	I/O configuration for pin PIO3_2/$\overline{\text{DCD}}$	0xD0	Table 94
IOCON_PIO1_5	R/W	0x0A0	I/O configuration for pin PIO1_5/$\overline{\text{RTS}}$/CT32B0_CAP0	0xD0	Table 95

All information provided in this document is subject to legal disclaimers.

© NXP B.V. 2012. All rights reserved.

Table 55. Register overview: I/O configuration (base address 0x4004 4000)

Name	Access	Address offset	Description	Reset value	Reference
IOCON_PIO1_6	R/W	0x0A4	I/O configuration for pin PIO1_6/RXD/CT32B0_MAT0	0xD0	Table 96
IOCON_PIO1_7	R/W	0x0A8	I/O configuration for pin PIO1_7/TXD/CT32B0_MAT1	0xD0	Table 97
IOCON_PIO3_3	R/W	0x0AC	I/O configuration for pin PIO3_3/$\overline{\text{RI}}$	0xD0	Table 98
IOCON_SCK_LOC	R/W	0x0B0	SCK pin location select register	0x00	Table 99
IOCON_DSR_LOC	R/W	0x0B4	$\overline{\text{DSR}}$ pin location select register	0x00	Table 100
IOCON_DCD_LOC	R/W	0x0B8	$\overline{\text{DCD}}$ pin location select register	0x00	Table 101
IOCON_RI_LOC	R/W	0x0BC	$\overline{\text{RI}}$ pin location register	0x00	Table 102

Table 56. I/O configuration registers ordered by port number

Port pin	Register name	LPC1112 HVQFN24	LPC1111/12/13/14 HVQFN33	LPC1113/14 LQFP48	LPC11C12/C14 LQFP48	LPC11C22/C24 LQFP48	Reference
PIO0_0	IOCON_RESET_PIO0_0	yes	yes	yes	yes	yes	Table 59
PIO0_1	IOCON_PIO0_1	yes	yes	yes	yes	yes	Table 57
PIO0_2	IOCON_PIO0_2	yes	yes	yes	yes	yes	Table 62
PIO0_3	IOCON_PIO0_3	no	yes	yes	yes	yes	Table 66
PIO0_4	IOCON_PIO0_4	yes	yes	yes	yes	yes	Table 67
PIO0_5	IOCON_PIO0_5	yes	yes	yes	yes	yes	Table 68
PIO0_6	IOCON_PIO0_6	yes	yes	yes	yes	yes	Table 74
PIO0_7	IOCON_PIO0_7	yes	yes	yes	yes	yes	Table 75
PIO0_8	IOCON_PIO0_8	yes	yes	yes	yes	yes	Table 79
PIO0_9	IOCON_PIO0_9	yes	yes	yes	yes	yes	Table 80
PIO0_10	IOCON_SWCLK_PIO0_10	yes	yes	yes	yes	yes	Table 81
PIO0_11	IOCON_R_PIO0_11	yes	yes	yes	yes	yes	Table 84
PIO1_0	IOCON_R_PIO1_0	yes	yes	yes	yes	yes	Table 85
PIO1_1	IOCON_R_PIO1_1	yes	yes	yes	yes	yes	Table 86
PIO1_2	IOCON_R_PIO1_2	yes	yes	yes	yes	yes	Table 87
PIO1_3	IOCON_SWDIO_PIO1_3	yes	yes	yes	yes	yes	Table 91
PIO1_4	IOCON_PIO1_4	yes	yes	yes	yes	yes	Table 92
PIO1_5	IOCON_PIO1_5	no	yes	yes	yes	yes	Table 95
PIO1_6	IOCON_PIO1_6	yes	yes	yes	yes	yes	Table 96
PIO1_7	IOCON_PIO1_7	yes	yes	yes	yes	yes	Table 97
PIO1_8	IOCON_PIO1_8	yes	yes	yes	yes	yes	Table 61
PIO1_9	IOCON_PIO1_9	no	yes	yes	yes	no	Table 69
PIO1_10	IOCON_PIO1_10	no	yes	yes	yes	yes	Table 82
PIO1_11	IOCON_PIO1_11	no	yes	yes	yes	yes	Table 93
PIO2_0	IOCON_PIO2_0	no	yes	yes	yes	yes	Table 58
PIO2_1	IOCON_PIO2_1	no	no	yes	yes	yes	Table 65

All information provided in this document is subject to legal disclaimers.

© NXP B.V. 2012. All rights reserved.

Table 56. I/O configuration registers ordered by port number

Port pin	Register name	LPC1112 HVQFN24	LPC1111/12/13/14 HVQFN33	LPC1113/14 LQFP48	LPC11C12/C14 LQFP48	LPC11C22/C24 LQFP48	Reference
PIO2_2	IOCON_PIO2_2	no	no	yes	yes	yes	Table 78
PIO2_3	IOCON_PIO2_3	no	no	yes	yes	yes	Table 90
PIO2_4	IOCON_PIO2_4	no	no	yes	yes	no	Table 71
PIO2_5	IOCON_PIO2_5	no	no	yes	yes	no	Table 72
PIO2_6	IOCON_PIO2_6	no	no	yes	yes	yes	Table 57
PIO2_7	IOCON_PIO2_7	no	no	yes	yes	yes	Table 63
PIO2_8	IOCON_PIO2_8	no	no	yes	yes	yes	Table 64
PIO2_9	IOCON_PIO2_9	no	no	yes	yes	no	Table 76
PIO2_10	IOCON_PIO2_10	no	no	yes	yes	yes	Table 77
PIO2_11	IOCON_PIO2_11	no	no	yes	yes	yes	Table 83
PIO3_0	IOCON_PIO3_0	no	no	yes	yes	yes	Table 88
PIO3_1	IOCON_PIO3_1	no	no	yes	yes	yes	Table 89
PIO3_2	IOCON_PIO3_2	no	yes	yes	yes	yes	Table 94
PIO3_3	IOCON_PIO3_3	no	no	yes	yes	yes	Table 98
PIO3_4	IOCON_PIO3_4	no	yes	yes	no	no	Table 70
PIO3_5	IOCON_PIO3_5	no	yes	yes	no	no	Table 73
-	IOCON_SCK_LOC	no	yes (SCKLOC = 01 reserved)	yes	yes	yes	Table 99
-	IOCON_DSR_LOC	no	no	yes	yes	yes	Table 100
-	IOCON_DCD_LOC	no	no	yes	yes	yes	Table 101
-	IOCON_RI_LOC	no	no	yes	yes	yes	Table 102

7.4.1 IOCON_PIO2_6

Table 57. IOCON_PIO2_6 register (IOCON_PIO2_6, address 0x4004 4000) bit description

Bit	Symbol	Value	Description	Reset value
2:0	FUNC		Selects pin function. All other values are reserved.	000
		0x0	Selects function PIO2_6.	
4:3	MODE		Selects function mode (on-chip pull-up/pull-down resistor control).	10
		0x0	Inactive (no pull-down/pull-up resistor enabled).	
		0x1	Pull-down resistor enabled.	
		0x2	Pull-up resistor enabled.	
		0x3	Repeater mode.	
5	HYS		Hysteresis.	0
		0	Disable.	
		1	Enable.	
9:6	-	-	Reserved	0011

All information provided in this document is subject to legal disclaimers. © NXP B.V. 2012. All rights reserved.

Table 57. IOCON_PIO2_6 register (IOCON_PIO2_6, address 0x4004 4000) bit description

Bit	Symbol	Value	Description	Reset value
10	OD		Selects pseudo open-drain mode. See Section 7.1 for part specific details.	0
		0	Standard GPIO output	
		1	Open-drain output	
31:11	-	-	Reserved	-

7.4.2 IOCON_PIO2_0

Table 58. IOCON_PIO2_0 register (IOCON_PIO2_0, address 0x4004 4008) bit description

Bit	Symbol	Value	Description	Reset value
2:0	FUNC		Selects pin function. All other values are reserved.	000
		0x0	Selects function PIO2_0.	
		0x1	Select function $\overline{\text{DTR}}$.	
		0x2	Select function SSEL1.	
4:3	MODE		Selects function mode (on-chip pull-up/pull-down resistor control).	10
		0x0	Inactive (no pull-down/pull-up resistor enabled).	
		0x1	Pull-down resistor enabled.	
		0x2	Pull-up resistor enabled.	
		0x3	Repeater mode.	
5	HYS		Hysteresis.	0
		0	Disable.	
		1	Enable.	
9:6	-	-	Reserved	0011
10	OD		Selects pseudo open-drain mode. See Section 7.1 for part specific details.	0
		0	Standard GPIO output	
		1	Open-drain output	
31:11	-	-	Reserved	-

7.4.3 IOCON_PIO_RESET_PIO0_0

Table 59. IOCON_RESET_PIO0_0 register (IOCON_RESET_PIO0_0, address 0x4004 400C) bit description

Bit	Symbol	Value	Description	Reset value
2:0	FUNC		Selects pin function. All other values are reserved.	000
		0x0	Selects function $\overline{\text{RESET}}$.	
		0x1	Selects function PIO0_0.	

All information provided in this document is subject to legal disclaimers.
© NXP B.V. 2012. All rights reserved.

Table 59. IOCON_RESET_PIO0_0 register (IOCON_RESET_PIO0_0, address 0x4004 400C) bit description

Bit	Symbol	Value	Description	Reset value
4:3	MODE		Selects function mode (on-chip pull-up/pull-down resistor control).	10
		0x0	Inactive (no pull-down/pull-up resistor enabled).	
		0x1	Pull-down resistor enabled.	
		0x2	Pull-up resistor enabled.	
		0x3	Repeater mode.	
5	HYS		Hysteresis.	0
		0	Disable.	
		1	Enable.	
9:6	-	-	Reserved	0011
10	OD		Selects pseudo open-drain mode. See Section 7.1 for part specific details.	0
		0	Standard GPIO output	
		1	Open-drain output	
31:11	-	-	Reserved	-

7.4.4 IOCON_PIO0_1

Table 60. IOCON_PIO0_1 register (IOCON_PIO0_1, address 0x4004 4010) bit description

Bit	Symbol	Value	Description	Reset value
2:0	FUNC		Selects pin function. All other values are reserved.	000
		0x0	Selects function PIO0_1.	
		0x1	Selects function CLKOUT.	
		0x2	Selects function CT32B0_MAT2.	
4:3	MODE		Selects function mode (on-chip pull-up/pull-down resistor control).	10
		0x0	Inactive (no pull-down/pull-up resistor enabled).	
		0x1	Pull-down resistor enabled.	
		0x2	Pull-up resistor enabled.	
		0x3	Repeater mode.	
5	HYS		Hysteresis.	0
		0	Disable.	
		1	Enable.	
9:6	-	-	Reserved	0011
10	OD		Selects pseudo open-drain mode. See Section 7.1 for part specific details.	0
		0	Standard GPIO output	
		1	Open-drain output	
31:11	-	-	Reserved	-

All information provided in this document is subject to legal disclaimers.
© NXP B.V. 2012. All rights reserved.

7.4.5 IOCON_PIO1_8

Table 61. IOCON_PIO1_8 register (IOCON_PIO1_8, address 0x4004 4014) bit description

Bit	Symbol	Value	Description	Reset value
2:0	FUNC		Selects pin function. All other values are reserved.	000
		0x0	Selects function PIO1_8.	
		0x1	Selects function CT16B1_CAP0.	
4:3	MODE		Selects function mode (on-chip pull-up/pull-down resistor control).	10
		0x0	Inactive (no pull-down/pull-up resistor enabled).	
		0x1	Pull-down resistor enabled.	
		0x2	Pull-up resistor enabled.	
		0x3	Repeater mode.	
5	HYS		Hysteresis.	0
		0	Disable.	
		1	Enable.	
9:6	-	-	Reserved	0011
10	OD		Selects pseudo open-drain mode. See Section 7.1 for part specific details.	0
		0	Standard GPIO output	
		1	Open-drain output	
31:11	-	-	Reserved	-

7.4.6 IOCON_PIO0_2

Table 62. IOCON_PIO0_2 register (IOCON_PIO0_2, address 0x4004 401C) bit description

Bit	Symbol	Value	Description	Reset value
2:0	FUNC		Selects pin function. All other values are reserved.	000
		0x0	Selects function PIO0_2.	
		0x1	Selects function SSEL0.	
		0x2	Selects function CT16B0_CAP0.	
4:3	MODE		Selects function mode (on-chip pull-up/pull-down resistor control).	10
		0x0	Inactive (no pull-down/pull-up resistor enabled).	
		0x1	Pull-down resistor enabled.	
		0x2	Pull-up resistor enabled.	
		0x3	Repeater mode.	
5	HYS		Hysteresis.	0
		0	Disable.	
		1	Enable.	
9:6	-	-	Reserved	0011

All information provided in this document is subject to legal disclaimers.
© NXP B.V. 2012. All rights reserved.

Table 62. IOCON_PIO0_2 register (IOCON_PIO0_2, address 0x4004 401C) bit description

Bit	Symbol	Value	Description	Reset value
10	OD		Selects pseudo open-drain mode. See Section 7.1 for part specific details.	0
		0	Standard GPIO output	
		1	Open-drain output	
31:11	-	-	Reserved	-

7.4.7 IOCON_PIO2_7

Table 63. IOCON_PIO2_7 register (IOCON_PIO2_7, address 0x4004 4020) bit description

Bit	Symbol	Value	Description	Reset value
2:0	FUNC		Selects pin function. All other values are reserved.	000
		0x0	Selects function PIO2_7.	
4:3	MODE		Selects function mode (on-chip pull-up/pull-down resistor control).	10
		0x0	Inactive (no pull-down/pull-up resistor enabled).	
		0x1	Pull-down resistor enabled.	
		0x2	Pull-up resistor enabled.	
		0x3	Repeater mode.	
5	HYS		Hysteresis.	0
		0	Disable.	
		1	Enable.	
9:6	-	-	Reserved	0011
10	OD		Selects pseudo open-drain mode. See Section 7.1 for part specific details.	0
		0	Standard GPIO output	
		1	Open-drain output	
31:11	-	-	Reserved	-

7.4.8 IOCON_PIO2_8

Table 64. IOCON_PIO2_8 register (IOCON_PIO2_8, address 0x4004 4024) bit description

Bit	Symbol	Value	Description	Reset value
2:0	FUNC		Selects pin function. All other values are reserved.	000
		0x0	Selects function PIO2_8.	
4:3	MODE		Selects function mode (on-chip pull-up/pull-down resistor control).	10
		0x0	Inactive (no pull-down/pull-up resistor enabled).	
		0x1	Pull-down resistor enabled.	
		0x2	Pull-up resistor enabled.	
		0x3	Repeater mode.	

All information provided in this document is subject to legal disclaimers. © NXP B.V. 2012. All rights reserved.

Table 64. IOCON_PIO2_8 register (IOCON_PIO2_8, address 0x4004 4024) bit description

Bit	Symbol	Value	Description	Reset value
5	HYS		Hysteresis.	0
		0	Disable.	
		1	Enable.	
9:6	-	-	Reserved	0011
10	OD		Selects pseudo open-drain mode. See Section 7.1 for part specific details.	0
		0	Standard GPIO output	
		1	Open-drain output	
31:11	-	-	Reserved	-

7.4.9 IOCON_PIO2_1

Table 65. IOCON_PIO2_1 register (IOCON_PIO2_1, address 0x4004 4028) bit description

Bit	Symbol	Value	Description	Reset value
2:0	FUNC		Selects pin function. All other values are reserved.	000
		0x0	Selects function PIO2_1.	
		0x1	Select function $\overline{\text{DSR}}$.	
		0x2	Select function SCK1.	
4:3	MODE		Selects function mode (on-chip pull-up/pull-down resistor control).	10
		0x0	Inactive (no pull-down/pull-up resistor enabled).	
		0x1	Pull-down resistor enabled.	
		0x2	Pull-up resistor enabled.	
		0x3	Repeater mode.	
5	HYS		Hysteresis.	0
		0	Disable.	
		1	Enable.	
9:6	-	-	Reserved	0011
10	OD		Selects pseudo open-drain mode. See Section 7.1 for part specific details.	0
		0	Standard GPIO output	
		1	Open-drain output	
31:11	-	-	Reserved	-

All information provided in this document is subject to legal disclaimers.
© NXP B.V. 2012. All rights reserved.

7.4.10 IOCON_PIO0_3

Table 66. IOCON_PIO0_3 register (IOCON_PIO0_3, address 0x4004 402C) bit description

Bit	Symbol	Value	Description	Reset value
2:0	FUNC		Selects pin function. All other values are reserved.	000
		0x0	Selects function PIO0_3.	
4:3	MODE		Selects function mode (on-chip pull-up/pull-down resistor control).	10
		0x0	Inactive (no pull-down/pull-up resistor enabled).	
		0x1	Pull-down resistor enabled.	
		0x2	Pull-up resistor enabled.	
		0x3	Repeater mode.	
5	HYS		Hysteresis.	0
		0	Disable.	
		1	Enable.	
9:6	-	-	Reserved	0011
10	OD		Selects pseudo open-drain mode.	0
		0	Standard GPIO output	
		1	Open-drain output	
31:11	-	-	Reserved	-

7.4.11 IOCON_PIO0_4

Table 67. IOCON_PIO0_4 register (IOCON_PIO0_4, address 0x4004 4030) bit description

Bit	Symbol	Value	Description	Reset value
2:0	FUNC		Selects pin function. All other values are reserved.	000
		0x0	Selects function PIO0_4 (open-drain pin).	
		0x1	Selects I2C function SCL (open-drain pin).	
7:3		-	Reserved.	00000
9:8	I2CMODE		Selects I2C mode. Select Standard mode (I2CMODE = 00, default) or Standard I/O functionality (I2CMODE = 01) if the pin function is GPIO (FUNC = 000).	00
		0x0	Standard mode/ Fast-mode I2C.	
		0x1	Standard I/O functionality	
		0x2	Fast-mode Plus I2C	
		0x3	Reserved.	
31:10	-	-	Reserved.	-

All information provided in this document is subject to legal disclaimers.
© NXP B.V. 2012. All rights reserved.

7.4.12 IOCON_PIO0_5

Table 68. IOCON_PIO0_5 register (IOCON_PIO0_5, address 0x4004 4034) bit description

Bit	Symbol	Value	Description	Reset value
2:0	FUNC		Selects pin function. All other values are reserved.	000
		0x0	Selects function PIO0_5 (open-drain pin).	
		0x1	Selects I2C function SDA (open-drain pin).	
7:3		-	Reserved.	00000
9:8	I2CMODE		Selects I2C mode. Select Standard mode (I2CMODE = 00, default) or Standard I/O functionality (I2CMODE = 01) if the pin function is GPIO (FUNC = 000).	00
		0x0	Standard mode/ Fast-mode I2C.	
		0x1	Standard I/O functionality	
		0x2	Fast-mode Plus I2C	
		0x3	Reserved.	
31:10	-	-	Reserved.	-

7.4.13 IOCON_PIO1_9

Remark: See Section 7.1 for part specific details.

Table 69. IOCON_PIO1_9 register (IOCON_PIO1_9, address 0x4004 4038) bit description

Bit	Symbol	Value	Description	Reset value
2:0	FUNC		Selects pin function. All other values are reserved.	000
		0x0	Selects function PIO1_9.	
		0x1	Selects function CT16B1_MAT0.	
4:3	MODE		Selects function mode (on-chip pull-up/pull-down resistor control).	10
		0x0	Inactive (no pull-down/pull-up resistor enabled).	
		0x1	Pull-down resistor enabled.	
		0x2	Pull-up resistor enabled.	
		0x3	Repeater mode.	
5	HYS		Hysteresis.	0
		0	Disable.	
		1	Enable.	
9:6	-	-	Reserved	0011
10	OD		Selects pseudo open-drain mode. See Section 7.1 for part specific details.	0
		0	Standard GPIO output	
		1	Open-drain output	
31:11	-	-	Reserved	-

7.4.14 IOCON_PIO3_4

Remark: See Section 7.1 for part specific details.

All information provided in this document is subject to legal disclaimers.
© NXP B.V. 2012. All rights reserved.

Table 70. IOCON_PIO3_4 register (IOCON_PIO3_4, address 0x4004 403C) bit description

Bit	Symbol	Value	Description	Reset value
2:0	FUNC		Selects pin function. All other values are reserved.	000
		0x0	Selects function PIO3_4.	
4:3	MODE		Selects function mode (on-chip pull-up/pull-down resistor control).	10
		0x0	Inactive (no pull-down/pull-up resistor enabled).	
		0x1	Pull-down resistor enabled.	
		0x2	Pull-up resistor enabled.	
		0x3	Repeater mode.	
5	HYS		Hysteresis.	0
		0	Disable.	
		1	Enable.	
9:6	-	-	Reserved	0011
10	OD		Selects pseudo open-drain mode. See Section 7.1 for part specific details.	0
		0	Standard GPIO output	
		1	Open-drain output	
31:11	-	-	Reserved	-

7.4.15 IOCON_PIO2_4

Remark: See Section 7.1 for part specific details.

Table 71. IOCON_PIO2_4 register (IOCON_PIO2_4, address 0x4004 4040) bit description

Bit	Symbol	Value	Description	Reset value
2:0	FUNC		Selects pin function. All other values are reserved.	000
		0x0	Selects function PIO2_4.	
4:3	MODE		Selects function mode (on-chip pull-up/pull-down resistor control).	10
		0x0	Inactive (no pull-down/pull-up resistor enabled).	
		0x1	Pull-down resistor enabled.	
		0x2	Pull-up resistor enabled.	
		0x3	Repeater mode.	
5	HYS		Hysteresis.	0
		0	Disable.	
		1	Enable.	
9:6	-	-	Reserved	0011
10	OD		Selects pseudo open-drain mode. See Section 7.1 for part specific details.	0
		0	Standard GPIO output	
		1	Open-drain output	
31:11	-	-	Reserved	-

All information provided in this document is subject to legal disclaimers. © NXP B.V. 2012. All rights reserved.

7.4.16 IOCON_PIO2_5

Remark: See Section 7.1 for part specific details.

Table 72. IOCON_PIO2_5 register (IOCON_PIO2_5, address 0x4004 4044) bit description

Bit	Symbol	Value	Description	Reset value
2:0	FUNC		Selects pin function. All other values are reserved.	000
		0x0	Selects function PIO2_5.	
4:3	MODE		Selects function mode (on-chip pull-up/pull-down resistor control).	10
		0x0	Inactive (no pull-down/pull-up resistor enabled).	
		0x1	Pull-down resistor enabled.	
		0x2	Pull-up resistor enabled.	
		0x3	Repeater mode.	
5	HYS		Hysteresis.	0
		0	Disable.	
		1	Enable.	
9:6	-	-	Reserved	0011
10	OD		Selects pseudo open-drain mode.	0
		0	Standard GPIO output	
		1	Open-drain output	
31:11	-	-	Reserved	-

7.4.17 IOCON_PIO3_5

Remark: See Section 7.1 for part specific details.

Table 73. IOCON_PIO3_5 register (IOCON_PIO3_5, address 0x4004 4048) bit description

Bit	Symbol	Value	Description	Reset value
2:0	FUNC		Selects pin function. All other values are reserved.	000
		0x0	Selects function PIO3_5.	
4:3	MODE		Selects function mode (on-chip pull-up/pull-down resistor control).	10
		0x0	Inactive (no pull-down/pull-up resistor enabled).	
		0x1	Pull-down resistor enabled.	
		0x2	Pull-up resistor enabled.	
		0x3	Repeater mode.	
5	HYS		Hysteresis.	0
		0	Disable.	
		1	Enable.	
9:6	-	-	Reserved	0011

All information provided in this document is subject to legal disclaimers.
© NXP B.V. 2012. All rights reserved.

Table 73. IOCON_PIO3_5 register (IOCON_PIO3_5, address 0x4004 4048) bit description

Bit	Symbol	Value	Description	Reset value
10	OD		Selects pseudo open-drain mode. See Section 7.1 for part specific details.	0
		0	Standard GPIO output	
		1	Open-drain output	
31:11	-	-	Reserved	-

7.4.18 IOCON_PIO0_6

Table 74. IOCON_PIO0_6 register (IOCON_PIO0_6, address 0x4004 404C) bit description

Bit	Symbol	Value	Description	Reset value
2:0	FUNC		Selects pin function. All other values are reserved.	000
		0x0	Selects function PIO0_6.	
		0x1	Reserved.	
		0x2	Selects function SCK0 (only if pin PIO0_6/SCK0 selected in Table 99).	
4:3	MODE		Selects function mode (on-chip pull-up/pull-down resistor control).	10
		0x0	Inactive (no pull-down/pull-up resistor enabled).	
		0x1	Pull-down resistor enabled.	
		0x2	Pull-up resistor enabled.	
		0x3	Repeater mode.	
5	HYS		Hysteresis.	0
		0	Disable.	
		1	Enable.	
9:6	-	-	Reserved	0011
10	OD		Selects pseudo open-drain mode. See Section 7.1 for part specific details.	0
		0	Standard GPIO output	
		1	Open-drain output	
31:11	-	-	Reserved	-

7.4.19 IOCON_PIO0_7

Table 75. IOCON_PIO0_7 register (IOCON_PIO0_7, address 0x4004 4050) bit description

Bit	Symbol	Value	Description	Reset value
2:0	FUNC		Selects pin function. All other values are reserved.	000
		0x0	Selects function PIO0_7.	
		0x1	Select function $\overline{\text{CTS}}$.	

All information provided in this document is subject to legal disclaimers.
© NXP B.V. 2012. All rights reserved.

Table 75. IOCON_PIO0_7 register (IOCON_PIO0_7, address 0x4004 4050) bit description

Bit	Symbol	Value	Description	Reset value
4:3	MODE		Selects function mode (on-chip pull-up/pull-down resistor control).	10
		0x0	Inactive (no pull-down/pull-up resistor enabled).	
		0x1	Pull-down resistor enabled.	
		0x2	Pull-up resistor enabled.	
		0x3	Repeater mode.	
5	HYS		Hysteresis.	0
		0	Disable.	
		1	Enable.	
9:6	-	-	Reserved	0011
10	OD		Selects pseudo open-drain mode. See Section 7.1 for part specific details.	0
		0	Standard GPIO output	
		1	Open-drain output	
31:11	-	-	Reserved	-

7.4.20 IOCON_PIO2_9

Remark: See Section 7.1 for part specific details.

Table 76. IOCON_PIO2_9 register (IOCON_PIO2_9, address 0x4004 4054) bit description

Bit	Symbol	Value	Description	Reset value
2:0	FUNC		Selects pin function. All other values are reserved.	000
		0x0	Selects function PIO2_9.	
4:3	MODE		Selects function mode (on-chip pull-up/pull-down resistor control).	10
		0x0	Inactive (no pull-down/pull-up resistor enabled).	
		0x1	Pull-down resistor enabled.	
		0x2	Pull-up resistor enabled.	
		0x3	Repeater mode.	
5	HYS		Hysteresis.	0
		0	Disable.	
		1	Enable.	
9:6	-	-	Reserved	0011
10	OD		Selects pseudo open-drain mode. See Section 7.1 for part specific details.	0
		0	Standard GPIO output	
		1	Open-drain output	
31:11	-	-	Reserved	-

All information provided in this document is subject to legal disclaimers.
© NXP B.V. 2012. All rights reserved.

7.4.21 IOCON_PIO2_10

Table 77. IOCON_PIO2_10 register (IOCON_PIO2_10, address 0x4004 4058) bit description

Bit	Symbol	Value	Description	Reset value
2:0	FUNC		Selects pin function. All other values are reserved.	000
		0x0	Selects function PIO2_10.	
4:3	MODE		Selects function mode (on-chip pull-up/pull-down resistor control).	10
		0x0	Inactive (no pull-down/pull-up resistor enabled).	
		0x1	Pull-down resistor enabled.	
		0x2	Pull-up resistor enabled.	
		0x3	Repeater mode.	
5	HYS		Hysteresis.	0
		0	Disable.	
		1	Enable.	
9:6	-	-	Reserved	0011
10	OD		Selects pseudo open-drain mode. See Section 7.1 for part specific details.	0
		0	Standard GPIO output	
		1	Open-drain output	
31:11	-	-	Reserved	-

7.4.22 IOCON_PIO2_2

Table 78. IOCON_PIO2_2 register (IOCON_PIO2_2, address 0x4004 405C) bit description

Bit	Symbol	Value	Description	Reset value
2:0	FUNC		Selects pin function. All other values are reserved.	000
		0x0	Selects function PIO2_2.	
		0x1	Select function $\overline{\text{DCD}}$.	
		0x2	Select function MISO1.	
4:3	MODE		Selects function mode (on-chip pull-up/pull-down resistor control).	10
		0x0	Inactive (no pull-down/pull-up resistor enabled).	
		0x1	Pull-down resistor enabled.	
		0x2	Pull-up resistor enabled.	
		0x3	Repeater mode.	
5	HYS		Hysteresis.	0
		0	Disable.	
		1	Enable.	
9:6	-	-	Reserved	0011

All information provided in this document is subject to legal disclaimers.
© NXP B.V. 2012. All rights reserved.

Table 78. IOCON_PIO2_2 register (IOCON_PIO2_2, address 0x4004 405C) bit description

Bit	Symbol	Value	Description	Reset value
10	OD		Selects pseudo open-drain mode.	0
		0	Standard GPIO output	
		1	Open-drain output	
31:11	-	-	Reserved	-

7.4.23 IOCON_PIO0_8

Table 79. IOCON_PIO0_8 register (IOCON_PIO0_8, address 0x4004 4060) bit description

Bit	Symbol	Value	Description	Reset value
2:0	FUNC		Selects pin function. All other values are reserved.	000
		0x0	Selects function PIO0_8.	
		0x1	Selects function MISO0.	
		0x2	Selects function CT16B0_MAT0.	
4:3	MODE		Selects function mode (on-chip pull-up/pull-down resistor control).	10
		0x0	Inactive (no pull-down/pull-up resistor enabled).	
		0x1	Pull-down resistor enabled.	
		0x2	Pull-up resistor enabled.	
		0x3	Repeater mode.	
5	HYS		Hysteresis.	0
		0	Disable.	
		1	Enable.	
9:6	-	-	Reserved	0011
10	OD		Selects pseudo open-drain mode. See Section 7.1 for part specific details.	0
		0	Standard GPIO output	
		1	Open-drain output	
31:11	-	-	Reserved	-

7.4.24 IOCON_PIO0_9

Table 80. IOCON_PIO0_9 register (IOCON_PIO0_9, address 0x4004 4064) bit description

Bit	Symbol	Value	Description	Reset value
2:0	FUNC		Selects pin function. All other values are reserved.	000
		0x0	Selects function PIO0_9.	
		0x1	Selects function MOSI0.	
		0x2	Selects function CT16B0_MAT1.	

All information provided in this document is subject to legal disclaimers.
© NXP B.V. 2012. All rights reserved.

Table 80. IOCON_PIO0_9 register (IOCON_PIO0_9, address 0x4004 4064) bit description

Bit	Symbol	Value	Description	Reset value
4:3	MODE		Selects function mode (on-chip pull-up/pull-down resistor control).	10
		0x0	Inactive (no pull-down/pull-up resistor enabled).	
		0x1	Pull-down resistor enabled.	
		0x2	Pull-up resistor enabled.	
		0x3	Repeater mode.	
5	HYS		Hysteresis.	0
		0	Disable.	
		1	Enable.	
9:6	-	-	Reserved	0011
10	OD		Selects pseudo open-drain mode. See Section 7.1 for part specific details.	0
		0	Standard GPIO output	
		1	Open-drain output	
31:11	-	-	Reserved	-

7.4.25 IOCON_SWCLK_PIO0_10

Table 81. IOCON_SWCLK_PIO0_10 register (IOCON_SWCLK_PIO0_10, address 0x4004 4068) bit description

Bit	Symbol	Value	Description	Reset value
2:0	FUNC		Selects pin function. All other values are reserved.	000
		0x0	Selects function SWCLK.	
		0x1	Selects function PIO0_10.	
		0x2	Selects function SCK0 (only if pin SWCLK/PIO0_10/SCK0/CT16B0_MAT2 selected in Table 99).	
		0x3	Selects function CT16B0_MAT2.	
4:3	MODE		Selects function mode (on-chip pull-up/pull-down resistor control).	10
		0x0	Inactive (no pull-down/pull-up resistor enabled).	
		0x1	Pull-down resistor enabled.	
		0x2	Pull-up resistor enabled.	
		0x3	Repeater mode.	
5	HYS		Hysteresis.	0
		0	Disable.	
		1	Enable.	
9:6	-	-	Reserved	0011
10	OD		Selects pseudo open-drain mode.	0
		0	Standard GPIO output	
		1	Open-drain output	
31:11	-	-	Reserved	-

All information provided in this document is subject to legal disclaimers. © NXP B.V. 2012. All rights reserved.

7.4.26 IOCON_PIO1_10

Table 82. IOCON_PIO1_10 register (IOCON_PIO1_10, address 0x4004 406C) bit description

Bit	Symbol	Value	Description	Reset value
2:0	FUNC		Selects pin function. All other values are reserved.	000
		0x0	Selects function PIO1_10.	
		0x1	Selects function AD6.	
		0x2	Selects function CT16B1_MAT1.	
4:3	MODE		Selects function mode (on-chip pull-up/pull-down resistor control).	10
		0x0	Inactive (no pull-down/pull-up resistor enabled).	
		0x1	Pull-down resistor enabled.	
		0x2	Pull-up resistor enabled.	
		0x3	Repeater mode.	
5	HYS		Hysteresis.	0
		0	Disable.	
		1	Enable.	
6	-	-	Reserved	1
7	ADMODE		Selects Analog/Digital mode	1
		0	Analog input mode	
		1	Digital functional mode	
9:8	-	-	Reserved	00
10	OD		Selects pseudo open-drain mode. See Section 7.1 for part specific details.	0
		0	Standard GPIO output	
		1	Open-drain output	
31:11	-	-	Reserved	-

7.4.27 IOCON_PIO2_11

Table 83. IOCON_PIO2_11 register (IOCON_PIO2_11, address 0x4004 4070) bit description

Bit	Symbol	Value	Description	Reset value
2:0	FUNC		Selects pin function. All other values are reserved.	000
		0x0	Selects function PIO2_11.	
		0x1	Select function SCK0 (only if pin PIO2_11/SCK0 selected in Table 99).	
4:3	MODE		Selects function mode (on-chip pull-up/pull-down resistor control).	10
		0x0	Inactive (no pull-down/pull-up resistor enabled).	
		0x1	Pull-down resistor enabled.	
		0x2	Pull-up resistor enabled.	
		0x3	Repeater mode.	

All information provided in this document is subject to legal disclaimers.
© NXP B.V. 2012. All rights reserved.

Table 83. IOCON_PIO2_11 register (IOCON_PIO2_11, address 0x4004 4070) bit description

Bit	Symbol	Value	Description	Reset value
5	HYS		Hysteresis.	0
		0	Disable.	
		1	Enable.	
9:6	-	-	Reserved	0011
10	OD		Selects pseudo open-drain mode. See Section 7.1 for part specific details.	0
		0	Standard GPIO output	
		1	Open-drain output	
31:11	-	-	Reserved	-

7.4.28 IOCON_R_PIO0_11

Table 84. IOCON_R_PIO0_11 register (IOCON_R_PIO0_11, address 0x4004 4074) bit description

Bit	Symbol	Value	Description	Reset value
2:0	FUNC		Selects pin function. All other values are reserved.	000
		0x0	Selects function R. This function is reserved. Select one of the alternate functions below.	
		0x1	Selects function PIO0_11.	
		0x2	Selects function AD0.	
		0x3	Selects function CT32B0_MAT3.	
4:3	MODE		Selects function mode (on-chip pull-up/pull-down resistor control).	10
		0x0	Inactive (no pull-down/pull-up resistor enabled).	
		0x1	Pull-down resistor enabled.	
		0x2	Pull-up resistor enabled.	
		0x3	Repeater mode.	
5	HYS		Hysteresis.	0
		0	Disable.	
		1	Enable.	
6	-	-	Reserved	1
7	ADMODE		Selects Analog/Digital mode	1
		0	Analog input mode	
		1	Digital functional mode	
9:8	-	-	Reserved	00
10	OD		Selects pseudo open-drain mode.	0
		0	Standard GPIO output	
		1	Open-drain output	
31:11	-	-	Reserved	-

All information provided in this document is subject to legal disclaimers.

© NXP B.V. 2012. All rights reserved.

7.4.29 IOCON_R_PIO1_0

Table 85. IOCON_R_PIO1_0 register (IOCON_R_PIO1_0, address 0x4004 4078) bit description

Bit	Symbol	Value	Description	Reset value
2:0	FUNC		Selects pin function. All other values are reserved.	000
		0x0	Selects function R. This function is reserved. Select one of the alternate functions below.	
		0x1	Selects function PIO1_0.	
		0x2	Selects function AD1.	
		0x3	Selects function CT32B1_CAP0.	
4:3	MODE		Selects function mode (on-chip pull-up/pull-down resistor control).	10
		0x0	Inactive (no pull-down/pull-up resistor enabled).	
		0x1	Pull-down resistor enabled.	
		0x2	Pull-up resistor enabled.	
		0x3	Repeater mode.	
5	HYS		Hysteresis.	0
		0	Disable.	
		1	Enable.	
6	-	-	Reserved	1
7	ADMODE		Selects Analog/Digital mode	1
		0	Analog input mode	
		1	Digital functional mode	
9:8	-	-	Reserved	00
10	OD		Selects pseudo open-drain mode. See Section 7.1 for part specific details.	0
		0	Standard GPIO output	
		1	Open-drain output	
31:11	-	-	Reserved	-

7.4.30 IOCON_R_PIO1_1

Table 86. IOCON_R_PIO1_1 register (IOCON_R_PIO1_1, address 0x4004 407C) bit description

Bit	Symbol	Value	Description	Reset value
2:0	FUNC		Selects pin function. All other values are reserved.	000
		0x0	Selects function R. This function is reserved. Select one of the alternate functions below.	
		0x1	Selects function PIO1_1.	
		0x2	Selects function AD2.	
		0x3	Selects function CT32B1_MAT0.	

All information provided in this document is subject to legal disclaimers.
© NXP B.V. 2012. All rights reserved.

Table 86. IOCON_R_PIO1_1 register (IOCON_R_PIO1_1, address 0x4004 407C) bit description *...continued*

Bit	Symbol	Value	Description	Reset value
4:3	MODE		Selects function mode (on-chip pull-up/pull-down resistor control).	10
		0x0	Inactive (no pull-down/pull-up resistor enabled).	
		0x1	Pull-down resistor enabled.	
		0x2	Pull-up resistor enabled.	
		0x3	Repeater mode.	
5	HYS		Hysteresis.	0
		0	Disable.	
		1	Enable.	
6	-	-	Reserved	1
7	ADMODE		Selects Analog/Digital mode	1
		0	Analog input mode	
		1	Digital functional mode	
9:8	-	-	Reserved	00
10	OD		Selects pseudo open-drain mode. See Section 7.1 for part specific details.	0
		0	Standard GPIO output	
		1	Open-drain output	
31:11	-	-	Reserved	-

7.4.31 IOCON_R_PIO1_2

Table 87. IOCON_R_PIO1_2 register (IOCON_R_PIO1_2, address 0x4004 4080) bit description

Bit	Symbol	Value	Description	Reset value
2:0	FUNC		Selects pin function. All other values are reserved.	000
		0x0	Selects function R. This function is reserved. Select one of the alternate functions below.	
		0x1	Selects function PIO1_2.	
		0x2	Selects function AD3.	
		0x3	Selects function CT32B1_MAT1.	
4:3	MODE		Selects function mode (on-chip pull-up/pull-down resistor control).	10
		0x0	Inactive (no pull-down/pull-up resistor enabled).	
		0x1	Pull-down resistor enabled.	
		0x2	Pull-up resistor enabled.	
		0x3	Repeater mode.	
5	HYS		Hysteresis.	0
		0	Disable.	
		1	Enable.	
6	-	-	Reserved	1

All information provided in this document is subject to legal disclaimers. © NXP B.V. 2012. All rights reserved.

Table 87. IOCON_R_PIO1_2 register (IOCON_R_PIO1_2, address 0x4004 4080) bit description *...continued*

Bit	Symbol	Value	Description	Reset value
7	ADMODE		Selects Analog/Digital mode	1
		0	Analog input mode	
		1	Digital functional mode	
9:8	-	-	Reserved	00
10	OD		Selects pseudo open-drain mode. See Section 7.1 for part specific details.	0
		0	Standard GPIO output	
		1	Open-drain output	
31:11	-	-	Reserved	-

7.4.32 IOCON_PIO3_0

Table 88. IOCON_PIO3_0 register (IOCON_PIO3_0, address 0x4004 4084) bit description

Bit	Symbol	Value	Description	Reset value
2:0	FUNC		Selects pin function. All other values are reserved.	000
		0x0	Selects function PIO3_0.	
		0x1	Selects function $\overline{\text{DTR}}$.	
4:3	MODE		Selects function mode (on-chip pull-up/pull-down resistor control).	10
		0x0	Inactive (no pull-down/pull-up resistor enabled).	
		0x1	Pull-down resistor enabled.	
		0x2	Pull-up resistor enabled.	
		0x3	Repeater mode.	
5	HYS		Hysteresis.	0
		0	Disable.	
		1	Enable.	
9:6	-	-	Reserved	0011
10	OD		Selects pseudo open-drain mode.	0
		0	Standard GPIO output	
		1	Open-drain output	
31:11	-	-	Reserved	-

7.4.33 IOCON_PIO3_1

Table 89. IOCON_PIO3_1 register (IOCON_PIO3_1, address 0x4004 4088) bit description

Bit	Symbol	Value	Description	Reset value
2:0	FUNC		Selects pin function. All other values are reserved.	000
		0x0	Selects function PIO3_1.	
		0x1	Selects function $\overline{\text{DSR}}$.	

All information provided in this document is subject to legal disclaimers. © NXP B.V. 2012. All rights reserved.

Table 89. IOCON_PIO3_1 register (IOCON_PIO3_1, address 0x4004 4088) bit description

Bit	Symbol	Value	Description	Reset value
4:3	MODE		Selects function mode (on-chip pull-up/pull-down resistor control).	10
		0x0	Inactive (no pull-down/pull-up resistor enabled).	
		0x1	Pull-down resistor enabled.	
		0x2	Pull-up resistor enabled.	
		0x3	Repeater mode.	
5	HYS		Hysteresis.	0
		0	Disable.	
		1	Enable.	
9:6	-	-	Reserved	0011
10	OD		Selects pseudo open-drain mode. See Section 7.1 for part specific details.	0
		0	Standard GPIO output	
		1	Open-drain output	
31:11	-	-	Reserved	-

7.4.34 IOCON_PIO2_3

Table 90. IOCON_PIO2_3 register (IOCON_PIO2_3, address 0x4004 408C) bit description

Bit	Symbol	Value	Description	Reset value
2:0	FUNC		Selects pin function. All other values are reserved.	000
		0x0	Selects function PIO2_3.	
		0x1	Selects function $\overline{RI}$.	
		0x2	Selects function MOSI1.	
4:3	MODE		Selects function mode (on-chip pull-up/pull-down resistor control).	10
		0x0	Inactive (no pull-down/pull-up resistor enabled).	
		0x1	Pull-down resistor enabled.	
		0x2	Pull-up resistor enabled.	
		0x3	Repeater mode.	
5	HYS		Hysteresis.	0
		0	Disable.	
		1	Enable.	
9:6	-	-	Reserved	0011
10	OD		Selects pseudo open-drain mode. See Section 7.1 for part specific details.	0
		0	Standard GPIO output	
		1	Open-drain output	
31:11	-	-	Reserved	-

All information provided in this document is subject to legal disclaimers.
© NXP B.V. 2012. All rights reserved.

7.4.35 IOCON_SWDIO_PIO1_3

Table 91. IOCON_SWDIO_PIO1_3 register (IOCON_SWDIO_PIO1_3, address 0x4004 4090) bit description

Bit	Symbol	Value	Description	Reset value
2:0	FUNC		Selects pin function. All other values are reserved.	000
		0x0	Selects function SWDIO.	
		0x1	Selects function PIO1_3.	
		0x2	Selects function AD4.	
		0x3	Selects function CT32B1_MAT2.	
4:3	MODE		Selects function mode (on-chip pull-up/pull-down resistor control).	10
		0x0	Inactive (no pull-down/pull-up resistor enabled).	
		0x1	Pull-down resistor enabled.	
		0x2	Pull-up resistor enabled.	
		0x3	Repeater mode.	
5	HYS		Hysteresis.	0
		0	Disable.	
		1	Enable.	
6	-	-	Reserved	1
7	ADMODE		Selects Analog/Digital mode	1
		0	Analog input mode	
		1	Digital functional mode	
9:8	-	-	Reserved	00
10	OD		Selects pseudo open-drain mode.	0
		0	Standard GPIO output	
		1	Open-drain output	
31:11	-	-	Reserved	-

7.4.36 IOCON_PIO1_4

Table 92. IOCON_PIO1_4 register (IOCON_PIO1_4, address 0x4004 4094) bit description

Bit	Symbol	Value	Description	Reset value
2:0	FUNC		Selects pin function. This pin functions as WAKEUP pin if the LPC111x/LPC11Cxx is in Deep power-down mode regardless of the value of FUNC. All other values are reserved.	000
		0x0	Selects function PIO1_4.	
		0x1	Selects function AD5.	
		0x2	Selects function CT32B1_MAT3.	

All information provided in this document is subject to legal disclaimers.
© NXP B.V. 2012. All rights reserved.

Table 92. IOCON_PIO1_4 register (IOCON_PIO1_4, address 0x4004 4094) bit description

Bit	Symbol	Value	Description	Reset value
4:3	MODE		Selects function mode (on-chip pull-up/pull-down resistor control).	10
		0x0	Inactive (no pull-down/pull-up resistor enabled).	
		0x1	Pull-down resistor enabled.	
		0x2	Pull-up resistor enabled.	
		0x3	Repeater mode.	
5	HYS		Hysteresis.	0
		0	Disable.	
		1	Enable.	
6	-	-	Reserved	1
7	ADMODE		Selects Analog/Digital mode	1
		0	Analog input mode	
		1	Digital functional mode	
9:8	-	-	Reserved	00
10	OD		Selects pseudo open-drain mode. See Section 7.1 for part specific details.	0
		0	Standard GPIO output	
		1	Open-drain output	
31:11	-	-	Reserved	-

7.4.37 IOCON_PIO1_11

Table 93. IOCON_PIO1_11 register (IOCON_PIO1_11, address 0x4004 4098) bit description

Bit	Symbol	Value	Description	Reset value
2:0	FUNC		Selects pin function. All other values are reserved.	000
		0x0	Selects function PIO1_11.	
		0x1	Selects function AD7.	
4:3	MODE		Selects function mode (on-chip pull-up/pull-down resistor control).	10
		0x0	Inactive (no pull-down/pull-up resistor enabled).	
		0x1	Pull-down resistor enabled.	
		0x2	Pull-up resistor enabled.	
		0x3	Repeater mode.	
5	HYS		Hysteresis.	0
		0	Disable.	
		1	Enable.	
6	-	-	Reserved	1
7	ADMODE		Selects Analog/Digital mode	1
		0	Analog input mode	
		1	Digital functional mode	
9:8	-	-	Reserved	00

All information provided in this document is subject to legal disclaimers. © NXP B.V. 2012. All rights reserved.

Table 93. IOCON_PIO1_11 register (IOCON_PIO1_11, address 0x4004 4098) bit description

Bit	Symbol	Value	Description	Reset value
10	OD		Selects pseudo open-drain mode. See Section 7.1 for part specific details.	0
		0	Standard GPIO output	
		1	Open-drain output	
31:11	-	-	Reserved	-

7.4.38 IOCON_PIO3_2

Table 94. IOCON_PIO3_2 register (IOCON_PIO3_2, address 0x4004 409C) bit description

Bit	Symbol	Value	Description	Reset value
2:0	FUNC		Selects pin function. All other values are reserved.	000
		0x0	Selects function PIO3_2.	
		0x1	Selects function $\overline{\text{DCD}}$.	
4:3	MODE		Selects function mode (on-chip pull-up/pull-down resistor control).	10
		0x0	Inactive (no pull-down/pull-up resistor enabled).	
		0x1	Pull-down resistor enabled.	
		0x2	Pull-up resistor enabled.	
		0x3	Repeater mode.	
5	HYS		Hysteresis.	0
		0	Disable.	
		1	Enable.	
9:6	-	-	Reserved	0011
10	OD		Selects pseudo open-drain mode.	0
		0	Standard GPIO output	
		1	Open-drain output	
31:11	-	-	Reserved	-

7.4.39 IOCON_PIO1_5

Table 95. IOCON_PIO1_5 register (IOCON_PIO1_5, address 0x4004 40A0) bit description

Bit	Symbol	Value	Description	Reset value
2:0	FUNC		Selects pin function. All other values are reserved.	000
		0x0	Selects function PIO1_5.	
		0x1	Selects function $\overline{\text{RTS}}$.	
		0x2	Selects function CT32B0_CAP0.	

All information provided in this document is subject to legal disclaimers.
© NXP B.V. 2012. All rights reserved.

Table 95. IOCON_PIO1_5 register (IOCON_PIO1_5, address 0x4004 40A0) bit description

Bit	Symbol	Value	Description	Reset value
4:3	MODE		Selects function mode (on-chip pull-up/pull-down resistor control).	10
		0x0	Inactive (no pull-down/pull-up resistor enabled).	
		0x1	Pull-down resistor enabled.	
		0x2	Pull-up resistor enabled.	
		0x3	Repeater mode.	
5	HYS		Hysteresis.	0
		0	Disable.	
		1	Enable.	
9:6	-	-	Reserved	0011
10	OD		Selects pseudo open-drain mode. See Section 7.1 for part specific details.	0
		0	Standard GPIO output	
		1	Open-drain output	
31:11	-	-	Reserved	-

7.4.40 IOCON_PIO1_6

Table 96. IOCON_PIO1_6 register (IOCON_PIO1_6, address 0x4004 40A4) bit description

Bit	Symbol	Value	Description	Reset value
2:0	FUNC		Selects pin function. All other values are reserved.	000
		0x0	Selects function PIO1_6.	
		0x1	Selects function RXD.	
		0x2	Selects function CT32B0_MAT0.	
4:3	MODE		Selects function mode (on-chip pull-up/pull-down resistor control).	10
		0x0	Inactive (no pull-down/pull-up resistor enabled).	
		0x1	Pull-down resistor enabled.	
		0x2	Pull-up resistor enabled.	
		0x3	Repeater mode.	
5	HYS		Hysteresis.	0
		0	Disable.	
		1	Enable.	
9:6	-	-	Reserved	0011
10	OD		Selects pseudo open-drain mode. See Section 7.1 for part specific details.	0
		0	Standard GPIO output	
		1	Open-drain output	
31:11	-	-	Reserved	-

All information provided in this document is subject to legal disclaimers.
© NXP B.V. 2012. All rights reserved.

7.4.41 IOCON_PIO1_7

Table 97. IOCON_PIO1_7 register (IOCON_PIO1_7, address 0x4004 40A8) bit description

Bit	Symbol	Value	Description	Reset value
2:0	FUNC		Selects pin function. All other values are reserved.	000
		0x0	Selects function PIO1_7.	
		0x1	Selects function TXD.	
		0x2	Selects function CT32B0_MAT1.	
4:3	MODE		Selects function mode (on-chip pull-up/pull-down resistor control).	10
		0x0	Inactive (no pull-down/pull-up resistor enabled).	
		0x1	Pull-down resistor enabled.	
		0x2	Pull-up resistor enabled.	
		0x3	Repeater mode.	
5	HYS		Hysteresis.	0
		0	Disable.	
		1	Enable.	
9:6	-	-	Reserved	0011
10	OD		Selects pseudo open-drain mode. See Section 7.1 for part specific details.	0
		0	Standard GPIO output	
		1	Open-drain output	
31:11	-	-	Reserved	-

7.4.42 IOCON_PIO3_3

Table 98. IOCON_PIO3_3 register (IOCON_PIO3_3, address 0x4004 40AC) bit description

Bit	Symbol	Value	Description	Reset value
2:0	FUNC		Selects pin function. All other values are reserved.	000
		0x0	Selects function PIO3_3.	
		0x1	Selects function $\overline{\text{RI}}$.	
4:3	MODE		Selects function mode (on-chip pull-up/pull-down resistor control).	10
		0x0	Inactive (no pull-down/pull-up resistor enabled).	
		0x1	Pull-down resistor enabled.	
		0x2	Pull-up resistor enabled.	
		0x3	Repeater mode.	
5	HYS		Hysteresis.	0
		0	Disable.	
		1	Enable.	
9:6	-	-	Reserved	0011

All information provided in this document is subject to legal disclaimers.
© NXP B.V. 2012. All rights reserved.

Table 98. IOCON_PIO3_3 register (IOCON_PIO3_3, address 0x4004 40AC) bit description

Bit	Symbol	Value	Description	Reset value
10	OD		Selects pseudo open-drain mode. See Section 7.1 for part specific details.	0
		0	Standard GPIO output	
		1	Open-drain output	
31:11	-	-	Reserved	-

7.4.43 IOCON_SCK_LOC

Table 99. IOCON SCK location register (IOCON_SCK_LOC, address 0x4004 40B0) bit description

Bit	Symbol	Value	Description	Reset value
1:0	SCKLOC		Selects pin location for SCK0 function.	00
		0x0	Selects SCK0 function in pin location SWCLK/PIO0_10/SCK0/CT16B0_MAT2 (see Table 81).	
		0x1	Selects SCK0 function in pin location PIO2_11/SCK0 (see Table 83.	
		0x2	Selects SCK0 function in pin location PIO0_6/SCK0 (see Table 74).	
		0x3	Reserved.	
31:2	-	-	Reserved.	-

7.4.44 IOCON_DSR_LOC

Table 100. IOCON $\overline{\text{DSR}}$ location register (IOCON_DSR_LOC, address 0x4004 40B4) bit description

Bit	Symbol	Value	Description	Reset value
1:0	DSRLOC		Selects pin location for DSR function.	00
		0x0	Selects $\overline{\text{DSR}}$ function in pin location PIO2_1/$\overline{\text{DSR}}$/SCK1.	
		0x1	Selects $\overline{\text{DSR}}$ function in pin location PIO3_1/$\overline{\text{DSR}}$.	
		0x2	Reserved.	
		0x3	Reserved.	
31:2	-	-	Reserved.	-

All information provided in this document is subject to legal disclaimers.
© NXP B.V. 2012. All rights reserved.

7.4.45 IOCON_DCD_LOC

Table 101. IOCON $\overline{DCD}$ location register (IOCON_DCD_LOC, address 0x4004 40B8) bit description

Bit	Symbol	Value	Description	Reset value
1:0	DCDLOC		Selects pin location for DCD function.	00
		0x0	Selects $\overline{DCD}$ function in pin location PIO2_2/$\overline{DCD}$/MISO1.	
		0x1	Selects $\overline{DCD}$ function in pin location PIO3_2/$\overline{DCD}$.	
		0x2	Reserved.	
		0x3	Reserved.	
31:2	-	-	Reserved.	-

7.4.46 IOCON_RI_LOC

Table 102. IOCON $\overline{RI}$ location register (IOCON_RI_LOC, address 0x4004 40BC) bit description

Bit	Symbol	Value	Description	Reset value
1:0	RILOC		Selects pin location for RI function.	00
		0x0	Selects $\overline{RI}$ function in pin location PIO2_3/$\overline{RI}$/MOSI1.	
		0x1	Selects $\overline{RI}$ function in pin location PIO3_3/$\overline{RI}$.	
		0x2	Reserved.	
		0x3	Reserved.	
31:2	-	-	Reserved.	-

All information provided in this document is subject to legal disclaimers.
© NXP B.V. 2012. All rights reserved.

8.1 How to read this chapter

Remark: This chapter applies to parts in the following series (see Table 1):

- LPC1100XL

The implementation of the I/O configuration registers varies for different LPC1100XL parts and packages. Table 104 shows which IOCON registers are used on the different packages.

8.2 Features

The I/O configuration registers control the electrical characteristics of the pads. The following features are programmable:

- Pin function.
- Internal pull-up/pull-down resistor or bus keeper function.
- Hysteresis.
- Analog input or digital mode for pads hosting the ADC inputs.
- I^2C mode for pads hosting the I^2C-bus function.
- Pseudo open-drain mode for non-I2C pins.

8.3 General description

The IOCON registers control the function (GPIO or peripheral function), the input mode, and the hysteresis of all PIOn_m pins. In addition, the I^2C-bus pins can be configured for different I^2C-bus modes. If a pin is used as input pin for the ADC, an analog input mode can be selected.

All information provided in this document is subject to legal disclaimers.
© NXP B.V. 2012. All rights reserved.

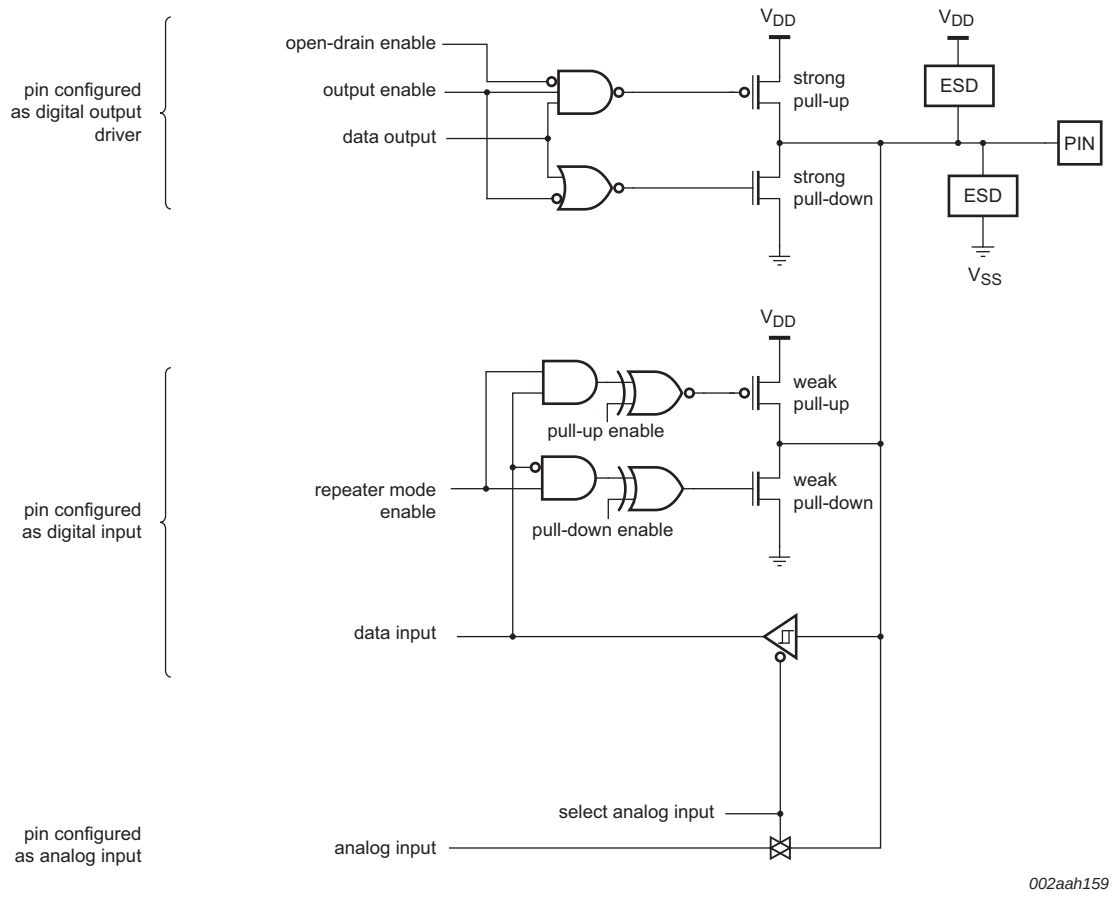

Fig 15. Standard I/O pin configuration

8.3.1 Pin function

The FUNC bits in the IOCON registers can be set to GPIO (FUNC = 000) or to a peripheral function. If the pins are GPIO pins, the GPIOnDIR registers determine whether the pin is configured as an input or output (see Section 12.3.2). For any peripheral function, the pin direction is controlled automatically depending on the pin's functionality. The GPIOnDIR registers have no effect for peripheral functions.

8.3.2 Pin mode

The MODE bits in the IOCON register allow the selection of on-chip pull-up or pull-down resistors for each pin or select the repeater mode.

The possible on-chip resistor configurations are pull-up enabled, pull-down enabled, or no pull-up/pull-down. The default value is pull-up enabled. If the pull-up resistor is enabled (default), all non-I2C pins are pulled up to 3.3 V (V_{DD} = 3.3 V).

The repeater mode enables the pull-up resistor if the pin is at a logic HIGH and enables the pull-down resistor if the pin is at a logic LOW. This causes the pin to retain its last known state if it is configured as an input and is not driven externally. The state retention is

All information provided in this document is subject to legal disclaimers.

© NXP B.V. 2012. All rights reserved.

not applicable to the Deep power-down mode. Repeater mode may typically be used to prevent a pin from floating (and potentially using significant power if it floats to an indeterminate state) if it is temporarily not driven.

8.3.3 Hysteresis

The input buffer for digital functions can be configured with hysteresis or as plain buffer through the IOCON registers (see the *LPC1100XL data sheet* for details).

If the external pad supply voltage V_{DD} is between 2.5 V and 3.6 V, the hysteresis buffer can be enabled or disabled. If V_{DD} is below 2.5 V, the hysteresis buffer must be **disabled** to use the pin in input mode.

8.3.4 A/D-mode

In A/D-mode, the digital receiver is disconnected to obtain an accurate input voltage for analog-to-digital conversions. This mode can be selected in those IOCON registers that control pins with an analog function. If A/D mode is selected, Hysteresis and Pin mode settings have no effect.

For pins without analog functions, the A/D-mode setting has no effect.

8.3.5 I^2C mode

If the I^2C function is selected by the FUNC bits of registers IOCON_PIO0_4 (Table 115) and IOCON_PIO0_5 (Table 116), then the I^2C-bus pins can be configured for different I^2C-modes:

- Standard mode/Fast-mode I^2C with input glitch filter (this includes an open-drain output according to the I^2C-bus specification).
- Fast-mode Plus with input glitch filter (this includes an open-drain output according to the I^2C-bus specification). In this mode, the pins function as high-current sinks.
- Standard open-drain I/O functionality without input filter.

Remark: Either Standard mode/Fast-mode I^2C or Standard I/O functionality should be selected if the pin is used as GPIO pin.

8.3.6 Open-drain Mode

When output is selected, either by selecting a special function in the FUNC field, or by selecting GPIO function for a pin having a 1 in its GPIODIR register, a 1 in the OD bit selects open-drain operation, that is, a 1 disables the high-drive transistor. This option has no effect on the primary I^2C pins.

8.4 Register description

The I/O configuration registers control the PIO port pins, the inputs and outputs of all peripherals and functional blocks, the I^2C-bus pins, and the ADC input pins.

Each port pin PIOn_m has one IOCON register assigned to control the pin's function and electrical characteristics.

All information provided in this document is subject to legal disclaimers.
© NXP B.V. 2012. All rights reserved.

Some input functions (SCK0, $\overline{DSR}$, $\overline{DCD}$, $\overline{RI}$, SSEL1, CT16B0_CAP0, SCK1, MISO1, MOSI1, CT32B0_CAP0, and RXD) are multiplexed to several physical pins. The IOCON_LOC registers select the pin location for each of these functions.

Remark: The IOCON registers are listed in order of their memory locations in Table 103, which correspond to the order of their physical pin numbers in the LQFP48 package starting at the upper left corner with pin 1 (PIO2_6). See Table 104 for a listing of IOCON registers ordered by port number.

The IOCON location registers are used to select a physical pin for multiplexed functions.

Remark: Note that once the pin location has been selected, the function still must be configured in the corresponding IOCON registers for the function to be usable on that pin.

Table 103. Register overview: I/O configuration (base address 0x4004 4000)

Name	Access	Address offset	Description	Reset value	Reference
IOCON_PIO2_6	R/W	0x000	I/O configuration for pin PIO2_6/ CT32B0_MAT1	0xD0	Table 105
-	R/W	0x004	Reserved	-	-
IOCON_PIO2_0	R/W	0x008	I/O configuration for pin PIO2_0/$\overline{DTR}$/SSEL1	0xD0	Table 106
IOCON_RESET_PIO0_0	R/W	0x00C	I/O configuration for pin $\overline{RESET}$/PIO0_0	0xD0	Table 107
IOCON_PIO0_1	R/W	0x010	I/O configuration for pin PIO0_1/CLKOUT/CT32B0_MAT2	0xD0	Table 105
IOCON_PIO1_8	R/W	0x014	I/O configuration for pin PIO1_8/CT16B1_CAP0	0xD0	Table 109
IOCON_SSEL1_LOC	R/W	0x018	SSEL1 pin location select register	0x0	Table 151
IOCON_PIO0_2	R/W	0x01C	I/O configuration for pin PIO0_2/SSEL0/CT16B0_CAP0	0xD0	Table 110
IOCON_PIO2_7	R/W	0x020	I/O configuration for pin PIO2_7/ CT32B0_MAT2/RXD	0xD0	Table 111
IOCON_PIO2_8	R/W	0x024	I/O configuration for pin PIO2_8/ CT32B0_MAT3/TXD	0xD0	Table 112
IOCON_PIO2_1	R/W	0x028	I/O configuration for pin PIO2_1/$\overline{DSR}$/SCK1	0xD0	Table 113
IOCON_PIO0_3	R/W	0x02C	I/O configuration for pin PIO0_3	0xD0	Table 114
IOCON_PIO0_4	R/W	0x030	I/O configuration for pin PIO0_4/SCL	0x00	Table 115
IOCON_PIO0_5	R/W	0x034	I/O configuration for pin PIO0_5/SDA	0x00	Table 116
IOCON_PIO1_9	R/W	0x038	I/O configuration for pin PIO1_9/CT16B1_MAT0/ MOSI1	0xD0	Table 117
IOCON_PIO3_4	R/W	0x03C	I/O configuration for pin PIO3_4/ CT16B0_CAP1/RXD	0xD0	Table 118
IOCON_PIO2_4	R/W	0x040	I/O configuration for pin PIO2_4/ CT16B1_MAT1/ SSEL1	0xD0	Table 119
IOCON_PIO2_5	R/W	0x044	I/O configuration for pin PIO2_5/ CT32B0_MAT0	0xD0	Table 120
IOCON_PIO3_5	R/W	0x048	I/O configuration for pin PIO3_5/ CT16B1_CAP1/TXD	0xD0	Table 121
IOCON_PIO0_6	R/W	0x04C	I/O configuration for pin PIO0_6/SCK0	0xD0	Table 122

All information provided in this document is subject to legal disclaimers.
© NXP B.V. 2012. All rights reserved.

Table 103. Register overview: I/O configuration (base address 0x4004 4000)

Name	Access	Address offset	Description	Reset value	Reference
IOCON_PIO0_7	R/W	0x050	I/O configuration for pin PIO0_7/$\overline{\text{CTS}}$	0xD0	Table 123
IOCON_PIO2_9	R/W	0x054	I/O configuration for pin PIO2_9/ CT32B0_CAP0	0xD0	Table 124
IOCON_PIO2_10	R/W	0x058	I/O configuration for pin PIO2_10	0xD0	Table 125
IOCON_PIO2_2	R/W	0x05C	I/O configuration for pin PIO2_2/$\overline{\text{DCD}}$/MISO1	0xD0	Table 126
IOCON_PIO0_8	R/W	0x060	I/O configuration for pin PIO0_8/MISO0/CT16B0_MAT0	0xD0	Table 127
IOCON_PIO0_9	R/W	0x064	I/O configuration for pin PIO0_9/MOSI0/CT16B0_MAT1	0xD0	Table 128
IOCON_SWCLK_PIO0_10	R/W	0x068	I/O configuration for pin SWCLK/PIO0_10/ SCK0/CT16B0_MAT2	0xD0	Table 129
IOCON_PIO1_10	R/W	0x06C	I/O configuration for pin PIO1_10/AD6/CT16B1_MAT1/ MISO1	0xD0	Table 130
IOCON_PIO2_11	R/W	0x070	I/O configuration for pin PIO2_11/SCK0/ CT32B0_CAP1	0xD0	Table 131
IOCON_R_PIO0_11	R/W	0x074	I/O configuration for pin R/PIO0_11/AD0/CT32B0_MAT3	0xD0	Table 132
IOCON_R_PIO1_0	R/W	0x078	I/O configuration for pin R/PIO1_0/AD1/CT32B1_CAP0	0xD0	Table 133
IOCON_R_PIO1_1	R/W	0x07C	I/O configuration for pin R/PIO1_1/AD2/CT32B1_MAT0	0xD0	Table 134
IOCON_R_PIO1_2	R/W	0x080	I/O configuration for pin R/PIO1_2/AD3/CT32B1_MAT1	0xD0	Table 135
IOCON_PIO3_0	R/W	0x084	I/O configuration for pin PIO3_0/$\overline{\text{DTR}}$/CT16B0_MAT0/TXD	0xD0	Table 136
IOCON_PIO3_1	R/W	0x088	I/O configuration for pin PIO3_1/$\overline{\text{DSR}}$/CT16B0_MAT1/RXD	0xD0	Table 137
IOCON_PIO2_3	R/W	0x08C	I/O configuration for pin PIO2_3/$\overline{\text{RI}}$/MOSI1	0xD0	Table 138
IOCON_SWDIO_PIO1_3	R/W	0x090	I/O configuration for pin SWDIO/PIO1_3/AD4/CT32B1_MAT2	0xD0	Table 139
IOCON_PIO1_4	R/W	0x094	I/O configuration for pin PIO1_4/AD5/CT32B1_MAT3	0xD0	Table 140
IOCON_PIO1_11	R/W	0x098	I/O configuration for pin PIO1_11/AD7/CT32B1_CAP1	0xD0	Table 141
IOCON_PIO3_2	R/W	0x09C	I/O configuration for pin PIO3_2/$\overline{\text{DCD}}$/ CT16B0_MAT2/SCK1	0xD0	Table 142
IOCON_PIO1_5	R/W	0x0A0	I/O configuration for pin PIO1_5/$\overline{\text{RTS}}$/CT32B0_CAP0	0xD0	Table 143
IOCON_PIO1_6	R/W	0x0A4	I/O configuration for pin PIO1_6/RXD/CT32B0_MAT0	0xD0	Table 144
IOCON_PIO1_7	R/W	0x0A8	I/O configuration for pin PIO1_7/TXD/CT32B0_MAT1	0xD0	Table 145

All information provided in this document is subject to legal disclaimers.

© NXP B.V. 2012. All rights reserved.

Table 103. Register overview: I/O configuration (base address 0x4004 4000)

Name	Access	Address offset	Description	Reset value	Reference
IOCON_PIO3_3	R/W	0x0AC	I/O configuration for pin PIO3_3/$\overline{\text{RI}}$/CT16B0_CAP0	0xD0	Table 146
IOCON_SCK0_LOC	R/W	0x0B0	SCK0 pin location select register	0x00	Table 147
IOCON_DSR_LOC	R/W	0x0B4	$\overline{\text{DSR}}$ pin location select register	0x00	Table 148
IOCON_DCD_LOC	R/W	0x0B8	$\overline{\text{DCD}}$ pin location select register	0x00	Table 149
IOCON_RI_LOC	R/W	0x0BC	$\overline{\text{RI}}$ pin location select register	0x00	Table 150
IOCON_CT16B0_CAP0_LOC	R/W	0x0C0	CT16B0_CAP0 pin location select register	0x00	Table 152
IOCON_SCK1_LOC	R/W	0x0C4	SCK1 pin location select register	0x00	Table 153
IOCON_MISO1_LOC	R/W	0x0C8	MISO1 pin location select register	0x00	Table 154
IOCON_MOSI1_LOC	R/W	0x0CC	MOSI1 pin location select register	0x00	Table 155
IOCON_CT32B0_CAP0_LOC	R/W	0x0D0	CT32B0_CAP0 pin location select register	0x00	Table 156
IOCON_RXD_LOC	R/W	0x0D4	RXD pin location select register	0x00	Table 157

Table 104. I/O configuration registers ordered by port number

Port pin	Register name	LPC1111/12/13/14 HVQFN33	LPC1113/14/15 LQFP48	Reference
PIO0_0	IOCON_RESET_PIO0_0	yes	yes	Table 107
PIO0_1	IOCON_PIO0_1	yes	yes	Table 105
PIO0_2	IOCON_PIO0_2	yes	yes	Table 110
PIO0_3	IOCON_PIO0_3	yes	yes	Table 114
PIO0_4	IOCON_PIO0_4	yes	yes	Table 115
PIO0_5	IOCON_PIO0_5	yes	yes	Table 116
PIO0_6	IOCON_PIO0_6	yes	yes	Table 122
PIO0_7	IOCON_PIO0_7	yes	yes	Table 123
PIO0_8	IOCON_PIO0_8	yes	yes	Table 127
PIO0_9	IOCON_PIO0_9	yes	yes	Table 128
PIO0_10	IOCON_SWCLK_PIO0_10	yes	yes	Table 129
PIO0_11	IOCON_R_PIO0_11	yes	yes	Table 132
PIO1_0	IOCON_R_PIO1_0	yes	yes	Table 133
PIO1_1	IOCON_R_PIO1_1	yes	yes	Table 134
PIO1_2	IOCON_R_PIO1_2	yes	yes	Table 135
PIO1_3	IOCON_SWDIO_PIO1_3	yes	yes	Table 139
PIO1_4	IOCON_PIO1_4	yes	yes	Table 140
PIO1_5	IOCON_PIO1_5	yes	yes	Table 143
PIO1_6	IOCON_PIO1_6	yes	yes	Table 144
PIO1_7	IOCON_PIO1_7	yes	yes	Table 145
PIO1_8	IOCON_PIO1_8	yes	yes	Table 109
PIO1_9	IOCON_PIO1_9	yes	yes	Table 117

All information provided in this document is subject to legal disclaimers.

© NXP B.V. 2012. All rights reserved.

Table 104. I/O configuration registers ordered by port number

Port pin	Register name	LPC1111/12/13/14 HVQFN33	LPC1113/14/15 LQFP48	Reference
PIO1_10	IOCON_PIO1_10	yes	yes	Table 130
PIO1_11	IOCON_PIO1_11	yes	yes	Table 141
PIO2_0	IOCON_PIO2_0	yes	yes	Table 106
PIO2_1	IOCON_PIO2_1	no	yes	Table 113
PIO2_2	IOCON_PIO2_2	no	yes	Table 126
PIO2_3	IOCON_PIO2_3	no	yes	Table 138
PIO2_4	IOCON_PIO2_4	no	yes	Table 119
PIO2_5	IOCON_PIO2_5	no	yes	Table 120
PIO2_6	IOCON_PIO2_6	no	yes	Table 105
PIO2_7	IOCON_PIO2_7	no	yes	Table 111
PIO2_8	IOCON_PIO2_8	no	yes	Table 112
PIO2_9	IOCON_PIO2_9	no	yes	Table 124
PIO2_10	IOCON_PIO2_10	no	yes	Table 125
PIO2_11	IOCON_PIO2_11	no	yes	Table 131
PIO3_0	IOCON_PIO3_0	no	yes	Table 136
PIO3_1	IOCON_PIO3_1	no	yes	Table 137
PIO3_2	IOCON_PIO3_2	yes	yes	Table 142
PIO3_3	IOCON_PIO3_3	no	yes	Table 146
PIO3_4	IOCON_PIO3_4	yes	yes	Table 118
PIO3_5	IOCON_PIO3_5	yes	yes	Table 121

8.4.1 IOCON_PIO2_6

Table 105. IOCON_PIO2_6 register (IOCON_PIO2_6, address 0x4004 4000) bit description

Bit	Symbol	Value	Description	Reset value
2:0	FUNC		Selects pin function. All other values are reserved.	000
		0x0	Selects function PIO2_6.	
		0x1	Selects function CT32B0_MAT1.	
4:3	MODE		Selects function mode (on-chip pull-up/pull-down resistor control).	10
		0x0	Inactive (no pull-down/pull-up resistor enabled).	
		0x1	Pull-down resistor enabled.	
		0x2	Pull-up resistor enabled.	
		0x3	Repeater mode.	
5	HYS		Hysteresis.	0
		0	Disable.	
		1	Enable.	
9:6	-	-	Reserved	0011

All information provided in this document is subject to legal disclaimers.

© NXP B.V. 2012. All rights reserved.

Table 105. IOCON_PIO2_6 register (IOCON_PIO2_6, address 0x4004 4000) bit description

Bit	Symbol	Value	Description	Reset value
10	OD		Selects pseudo open-drain mode.	0
		0	Standard GPIO output	
		1	Open-drain output	
31:11	-	-	Reserved	-

8.4.2 IOCON_PIO2_0

Table 106. IOCON_PIO2_0 register (IOCON_PIO2_0, address 0x4004 4008) bit description

Bit	Symbol	Value	Description	Reset value
2:0	FUNC		Selects pin function. All other values are reserved.	000
		0x0	Selects function PIO2_0.	
		0x1	Select function $\overline{\text{DTR}}$.	
		0x2	Select function SSEL1.	
4:3	MODE		Selects function mode (on-chip pull-up/pull-down resistor control).	10
		0x0	Inactive (no pull-down/pull-up resistor enabled).	
		0x1	Pull-down resistor enabled.	
		0x2	Pull-up resistor enabled.	
		0x3	Repeater mode.	
5	HYS		Hysteresis.	0
		0	Disable.	
		1	Enable.	
9:6	-	-	Reserved	0011
10	OD		Selects pseudo open-drain mode.	0
		0	Standard GPIO output	
		1	Open-drain output	
31:11	-	-	Reserved	-

8.4.3 IOCON_PIO_RESET_PIO0_0

Table 107. IOCON_RESET_PIO0_0 register (IOCON_RESET_PIO0_0, address 0x4004 400C) bit description

Bit	Symbol	Value	Description	Reset value
2:0	FUNC		Selects pin function. All other values are reserved.	000
		0x0	Selects function $\overline{\text{RESET}}$.	
		0x1	Selects function PIO0_0.	

All information provided in this document is subject to legal disclaimers.
© NXP B.V. 2012. All rights reserved.

Table 107. IOCON_RESET_PIO0_0 register (IOCON_RESET_PIO0_0, address 0x4004 400C) bit description

Bit	Symbol	Value	Description	Reset value
4:3	MODE		Selects function mode (on-chip pull-up/pull-down resistor control).	10
		0x0	Inactive (no pull-down/pull-up resistor enabled).	
		0x1	Pull-down resistor enabled.	
		0x2	Pull-up resistor enabled.	
		0x3	Repeater mode.	
5	HYS		Hysteresis.	0
		0	Disable.	
		1	Enable.	
9:6	-	-	Reserved	0011
10	OD		Selects pseudo open-drain mode.	0
		0	Standard GPIO output	
		1	Open-drain output	
31:11	-	-	Reserved	-

8.4.4 IOCON_PIO0_1

Table 108. IOCON_PIO0_1 register (IOCON_PIO0_1, address 0x4004 4010) bit description

Bit	Symbol	Value	Description	Reset value
2:0	FUNC		Selects pin function. All other values are reserved.	000
		0x0	Selects function PIO0_1.	
		0x1	Selects function CLKOUT.	
		0x2	Selects function CT32B0_MAT2.	
4:3	MODE		Selects function mode (on-chip pull-up/pull-down resistor control).	10
		0x0	Inactive (no pull-down/pull-up resistor enabled).	
		0x1	Pull-down resistor enabled.	
		0x2	Pull-up resistor enabled.	
		0x3	Repeater mode.	
5	HYS		Hysteresis.	0
		0	Disable.	
		1	Enable.	
9:6	-	-	Reserved	0011
10	OD		Selects pseudo open-drain mode.	0
		0	Standard GPIO output	
		1	Open-drain output	
31:11	-	-	Reserved	-

All information provided in this document is subject to legal disclaimers.
© NXP B.V. 2012. All rights reserved.

8.4.5 IOCON_PIO1_8

Table 109. IOCON_PIO1_8 register (IOCON_PIO1_8, address 0x4004 4014) bit description

Bit	Symbol	Value	Description	Reset value
2:0	FUNC		Selects pin function. All other values are reserved.	000
		0x0	Selects function PIO1_8.	
		0x1	Selects function CT16B1_CAP0.	
4:3	MODE		Selects function mode (on-chip pull-up/pull-down resistor control).	10
		0x0	Inactive (no pull-down/pull-up resistor enabled).	
		0x1	Pull-down resistor enabled.	
		0x2	Pull-up resistor enabled.	
		0x3	Repeater mode.	
5	HYS		Hysteresis.	0
		0	Disable.	
		1	Enable.	
9:6	-	-	Reserved	0011
10	OD		Selects pseudo open-drain mode.	0
		0	Standard GPIO output	
		1	Open-drain output	
31:11	-	-	Reserved	-

8.4.6 IOCON_PIO0_2

Table 110. IOCON_PIO0_2 register (IOCON_PIO0_2, address 0x4004 401C) bit description

Bit	Symbol	Value	Description	Reset value
2:0	FUNC		Selects pin function. All other values are reserved.	000
		0x0	Selects function PIO0_2.	
		0x1	Selects function SSEL0.	
		0x2	Selects function CT16B0_CAP0.	
4:3	MODE		Selects function mode (on-chip pull-up/pull-down resistor control).	10
		0x0	Inactive (no pull-down/pull-up resistor enabled).	
		0x1	Pull-down resistor enabled.	
		0x2	Pull-up resistor enabled.	
		0x3	Repeater mode.	
5	HYS		Hysteresis.	0
		0	Disable.	
		1	Enable.	
9:6	-	-	Reserved	0011

All information provided in this document is subject to legal disclaimers.
© NXP B.V. 2012. All rights reserved.

Table 110. IOCON_PIO0_2 register (IOCON_PIO0_2, address 0x4004 401C) bit description

Bit	Symbol	Value	Description	Reset value
10	OD		Selects pseudo open-drain mode.	0
		0	Standard GPIO output	
		1	Open-drain output	
31:11	-	-	Reserved	-

8.4.7 IOCON_PIO2_7

Table 111. IOCON_PIO2_7 register (IOCON_PIO2_7, address 0x4004 4020) bit description

Bit	Symbol	Value	Description	Reset value
2:0	FUNC		Selects pin function. All other values are reserved.	000
		0x0	Selects function PIO2_7.	
		0x1	Selects function CT32B0_MAT2.	
		0x2	Selects function RXD.	
4:3	MODE		Selects function mode (on-chip pull-up/pull-down resistor control).	10
		0x0	Inactive (no pull-down/pull-up resistor enabled).	
		0x1	Pull-down resistor enabled.	
		0x2	Pull-up resistor enabled.	
		0x3	Repeater mode.	
5	HYS		Hysteresis.	0
		0	Disable.	
		1	Enable.	
9:6	-	-	Reserved	0011
10	OD		Selects pseudo open-drain mode.	0
		0	Standard GPIO output	
		1	Open-drain output	
31:11	-	-	Reserved	-

8.4.8 IOCON_PIO2_8

Table 112. IOCON_PIO2_8 register (IOCON_PIO2_8, address 0x4004 4024) bit description

Bit	Symbol	Value	Description	Reset value
2:0	FUNC		Selects pin function. All other values are reserved.	000
		0x0	Selects function PIO2_8.	
		0x1	Selects function CT32B0_MAT3.	
		0x2	Selects function TXD.	

All information provided in this document is subject to legal disclaimers.
© NXP B.V. 2012. All rights reserved.

Table 112. IOCON_PIO2_8 register (IOCON_PIO2_8, address 0x4004 4024) bit description

Bit	Symbol	Value	Description	Reset value
4:3	MODE		Selects function mode (on-chip pull-up/pull-down resistor control).	10
		0x0	Inactive (no pull-down/pull-up resistor enabled).	
		0x1	Pull-down resistor enabled.	
		0x2	Pull-up resistor enabled.	
		0x3	Repeater mode.	
5	HYS		Hysteresis.	0
		0	Disable.	
		1	Enable.	
9:6	-	-	Reserved	0011
10	OD		Selects pseudo open-drain mode.	0
		0	Standard GPIO output	
		1	Open-drain output	
31:11	-	-	Reserved	-

8.4.9 IOCON_PIO2_1

Table 113. IOCON_PIO2_1 register (IOCON_PIO2_1, address 0x4004 4028) bit description

Bit	Symbol	Value	Description	Reset value
2:0	FUNC		Selects pin function. All other values are reserved.	000
		0x0	Selects function PIO2_1.	
		0x1	Select function $\overline{\text{DSR}}$.	
		0x2	Select function SCK1.	
4:3	MODE		Selects function mode (on-chip pull-up/pull-down resistor control).	10
		0x0	Inactive (no pull-down/pull-up resistor enabled).	
		0x1	Pull-down resistor enabled.	
		0x2	Pull-up resistor enabled.	
		0x3	Repeater mode.	
5	HYS		Hysteresis.	0
		0	Disable.	
		1	Enable.	
9:6	-	-	Reserved	0011
10	OD		Selects pseudo open-drain mode.	0
		0	Standard GPIO output	
		1	Open-drain output	
31:11	-	-	Reserved	-

All information provided in this document is subject to legal disclaimers.
© NXP B.V. 2012. All rights reserved.

8.4.10 IOCON_PIO0_3

Table 114. IOCON_PIO0_3 register (IOCON_PIO0_3, address 0x4004 402C) bit description

Bit	Symbol	Value	Description	Reset value
2:0	FUNC		Selects pin function. All other values are reserved.	000
		0x0	Selects function PIO0_3.	
4:3	MODE		Selects function mode (on-chip pull-up/pull-down resistor control).	10
		0x0	Inactive (no pull-down/pull-up resistor enabled).	
		0x1	Pull-down resistor enabled.	
		0x2	Pull-up resistor enabled.	
		0x3	Repeater mode.	
5	HYS		Hysteresis.	0
		0	Disable.	
		1	Enable.	
9:6	-	-	Reserved	0011
10	OD		Selects pseudo open-drain mode.	0
		0	Standard GPIO output	
		1	Open-drain output	
31:11	-	-	Reserved	-

8.4.11 IOCON_PIO0_4

Table 115. IOCON_PIO0_4 register (IOCON_PIO0_4, address 0x4004 4030) bit description

Bit	Symbol	Value	Description	Reset value
2:0	FUNC		Selects pin function. All other values are reserved.	000
		0x0	Selects function PIO0_4 (open-drain pin).	
		0x1	Selects I2C function SCL (open-drain pin).	
7:3		-	Reserved.	00000
9:8	I2CMODE		Selects I2C mode. Select Standard mode (I2CMODE = 00, default) or Standard I/O functionality (I2CMODE = 01) if the pin function is GPIO (FUNC = 000).	00
		0x0	Standard mode/ Fast-mode I2C.	
		0x1	Standard I/O functionality	
		0x2	Fast-mode Plus I2C	
		0x3	Reserved.	
31:10	-	-	Reserved.	-

All information provided in this document is subject to legal disclaimers.
© NXP B.V. 2012. All rights reserved.

8.4.12 IOCON_PIO0_5

Table 116. IOCON_PIO0_5 register (IOCON_PIO0_5, address 0x4004 4034) bit description

Bit	Symbol	Value	Description	Reset value
2:0	FUNC		Selects pin function. All other values are reserved.	000
		0x0	Selects function PIO0_5 (open-drain pin).	
		0x1	Selects I2C function SDA (open-drain pin).	
7:3		-	Reserved.	00000
9:8	I2CMODE		Selects I2C mode. Select Standard mode (I2CMODE = 00, default) or Standard I/O functionality (I2CMODE = 01) if the pin function is GPIO (FUNC = 000).	00
		0x0	Standard mode/ Fast-mode I2C.	
		0x1	Standard I/O functionality	
		0x2	Fast-mode Plus I2C	
		0x3	Reserved.	
31:10	-	-	Reserved.	-

8.4.13 IOCON_PIO1_9

Remark: See Section 8.1 for part specific details.

Table 117. IOCON_PIO1_9 register (IOCON_PIO1_9, address 0x4004 4038) bit description

Bit	Symbol	Value	Description	Reset value
2:0	FUNC		Selects pin function. All other values are reserved.	000
		0x0	Selects function PIO1_9.	
		0x1	Selects function CT16B1_MAT0.	
		0x2	Selects function MOSI1.	
4:3	MODE		Selects function mode (on-chip pull-up/pull-down resistor control).	10
		0x0	Inactive (no pull-down/pull-up resistor enabled).	
		0x1	Pull-down resistor enabled.	
		0x2	Pull-up resistor enabled.	
		0x3	Repeater mode.	
5	HYS		Hysteresis.	0
		0	Disable.	
		1	Enable.	
9:6	-	-	Reserved	0011
10	OD		Selects pseudo open-drain mode.	0
		0	Standard GPIO output	
		1	Open-drain output	
31:11	-	-	Reserved	-

8.4.14 IOCON_PIO3_4

Remark: See Section 8.1 for part specific details.

All information provided in this document is subject to legal disclaimers. © NXP B.V. 2012. All rights reserved.

Table 118. IOCON_PIO3_4 register (IOCON_PIO3_4, address 0x4004 403C) bit description

Bit	Symbol	Value	Description	Reset value
2:0	FUNC		Selects pin function. All other values are reserved.	000
		0x0	Selects function PIO3_4.	
		0x1	Selects function CT16B0_CAP1.	
		0x2	Selects function RXD.	
4:3	MODE		Selects function mode (on-chip pull-up/pull-down resistor control).	10
		0x0	Inactive (no pull-down/pull-up resistor enabled).	
		0x1	Pull-down resistor enabled.	
		0x2	Pull-up resistor enabled.	
		0x3	Repeater mode.	
5	HYS		Hysteresis.	0
		0	Disable.	
		1	Enable.	
9:6	-	-	Reserved	0011
10	OD		Selects pseudo open-drain mode.	0
		0	Standard GPIO output	
		1	Open-drain output	
31:11	-	-	Reserved	-

8.4.15 IOCON_PIO2_4

Remark: See Section 8.1 for part specific details.

Table 119. IOCON_PIO2_4 register (IOCON_PIO2_4, address 0x4004 4040) bit description

Bit	Symbol	Value	Description	Reset value
2:0	FUNC		Selects pin function. All other values are reserved.	000
		0x0	Selects function PIO2_4.	
		0x1	Selects function CT16B1_MAT1.	
		0x2	Selects function SSEL1.	
4:3	MODE		Selects function mode (on-chip pull-up/pull-down resistor control).	10
		0x0	Inactive (no pull-down/pull-up resistor enabled).	
		0x1	Pull-down resistor enabled.	
		0x2	Pull-up resistor enabled.	
		0x3	Repeater mode.	
5	HYS		Hysteresis.	0
		0	Disable.	
		1	Enable.	
9:6	-	-	Reserved	0011

All information provided in this document is subject to legal disclaimers.
© NXP B.V. 2012. All rights reserved.

Table 119. IOCON_PIO2_4 register (IOCON_PIO2_4, address 0x4004 4040) bit description

Bit	Symbol	Value	Description	Reset value
10	OD		Selects pseudo open-drain mode.	0
		0	Standard GPIO output	
		1	Open-drain output	
31:11	-	-	Reserved	-

8.4.16 IOCON_PIO2_5

Remark: See Section 8.1 for part specific details.

Table 120. IOCON_PIO2_5 register (IOCON_PIO2_5, address 0x4004 4044) bit description

Bit	Symbol	Value	Description	Reset value
2:0	FUNC		Selects pin function. All other values are reserved.	000
		0x0	Selects function PIO2_5.	
		0x1	Selects function CT32B0_MAT0.	
4:3	MODE		Selects function mode (on-chip pull-up/pull-down resistor control).	10
		0x0	Inactive (no pull-down/pull-up resistor enabled).	
		0x1	Pull-down resistor enabled.	
		0x2	Pull-up resistor enabled.	
		0x3	Repeater mode.	
5	HYS		Hysteresis.	0
		0	Disable.	
		1	Enable.	
9:6	-	-	Reserved	0011
10	OD		Selects pseudo open-drain mode.	0
		0	Standard GPIO output	
		1	Open-drain output	
31:11	-	-	Reserved	-

8.4.17 IOCON_PIO3_5

Remark: See Section 8.1 for part specific details.

Table 121. IOCON_PIO3_5 register (IOCON_PIO3_5, address 0x4004 4048) bit description

Bit	Symbol	Value	Description	Reset value
2:0	FUNC		Selects pin function. All other values are reserved.	000
		0x0	Selects function PIO3_5.	
		0x1	Selects function CT16B1_CAP1.	
		0x2	Selects function TXD.	

All information provided in this document is subject to legal disclaimers.
© NXP B.V. 2012. All rights reserved.

Table 121. IOCON_PIO3_5 register (IOCON_PIO3_5, address 0x4004 4048) bit description

Bit	Symbol	Value	Description	Reset value
4:3	MODE		Selects function mode (on-chip pull-up/pull-down resistor control).	10
		0x0	Inactive (no pull-down/pull-up resistor enabled).	
		0x1	Pull-down resistor enabled.	
		0x2	Pull-up resistor enabled.	
		0x3	Repeater mode.	
5	HYS		Hysteresis.	0
		0	Disable.	
		1	Enable.	
9:6	-	-	Reserved	0011
10	OD		Selects pseudo open-drain mode.	0
		0	Standard GPIO output	
		1	Open-drain output	
31:11	-	-	Reserved	-

8.4.18 IOCON_PIO0_6

Table 122. IOCON_PIO0_6 register (IOCON_PIO0_6, address 0x4004 404C) bit description

Bit	Symbol	Value	Description	Reset value
2:0	FUNC		Selects pin function. All other values are reserved.	000
		0x0	Selects function PIO0_6.	
		0x1	Reserved.	
		0x2	Selects function SCK0 (only if pin PIO0_6/SCK0 selected in Table 147).	
4:3	MODE		Selects function mode (on-chip pull-up/pull-down resistor control).	10
		0x0	Inactive (no pull-down/pull-up resistor enabled).	
		0x1	Pull-down resistor enabled.	
		0x2	Pull-up resistor enabled.	
		0x3	Repeater mode.	
5	HYS		Hysteresis.	0
		0	Disable.	
		1	Enable.	
9:6	-	-	Reserved	0011
10	OD		Selects pseudo open-drain mode.	0
		0	Standard GPIO output	
		1	Open-drain output	
31:11	-	-	Reserved	-

All information provided in this document is subject to legal disclaimers.
© NXP B.V. 2012. All rights reserved.

8.4.19 IOCON_PIO0_7

Table 123. IOCON_PIO0_7 register (IOCON_PIO0_7, address 0x4004 4050) bit description

Bit	Symbol	Value	Description	Reset value
2:0	FUNC		Selects pin function. All other values are reserved.	000
		0x0	Selects function PIO0_7.	
		0x1	Select function $\overline{\text{CTS}}$.	
4:3	MODE		Selects function mode (on-chip pull-up/pull-down resistor control).	10
		0x0	Inactive (no pull-down/pull-up resistor enabled).	
		0x1	Pull-down resistor enabled.	
		0x2	Pull-up resistor enabled.	
		0x3	Repeater mode.	
5	HYS		Hysteresis.	0
		0	Disable.	
		1	Enable.	
9:6	-	-	Reserved	0011
10	OD		Selects pseudo open-drain mode.	0
		0	Standard GPIO output	
		1	Open-drain output	
31:11	-	-	Reserved	-

8.4.20 IOCON_PIO2_9

Remark: See Section 8.1 for part specific details.

Table 124. IOCON_PIO2_9 register (IOCON_PIO2_9, address 0x4004 4054) bit description

Bit	Symbol	Value	Description	Reset value
2:0	FUNC		Selects pin function. All other values are reserved.	000
		0x0	Selects function PIO2_9.	
		0x1	Selects function CT32B0_CAP0.	
4:3	MODE		Selects function mode (on-chip pull-up/pull-down resistor control).	10
		0x0	Inactive (no pull-down/pull-up resistor enabled).	
		0x1	Pull-down resistor enabled.	
		0x2	Pull-up resistor enabled.	
		0x3	Repeater mode.	
5	HYS		Hysteresis.	0
		0	Disable.	
		1	Enable.	
9:6	-	-	Reserved	0011

All information provided in this document is subject to legal disclaimers.
© NXP B.V. 2012. All rights reserved.

Table 124. IOCON_PIO2_9 register (IOCON_PIO2_9, address 0x4004 4054) bit description

Bit	Symbol	Value	Description	Reset value
10	OD		Selects pseudo open-drain mode.	0
		0	Standard GPIO output	
		1	Open-drain output	
31:11	-	-	Reserved	-

8.4.21 IOCON_PIO2_10

Table 125. IOCON_PIO2_10 register (IOCON_PIO2_10, address 0x4004 4058) bit description

Bit	Symbol	Value	Description	Reset value
2:0	FUNC		Selects pin function. All other values are reserved.	000
		0x0	Selects function PIO2_10.	
4:3	MODE		Selects function mode (on-chip pull-up/pull-down resistor control).	10
		0x0	Inactive (no pull-down/pull-up resistor enabled).	
		0x1	Pull-down resistor enabled.	
		0x2	Pull-up resistor enabled.	
		0x3	Repeater mode.	
5	HYS		Hysteresis.	0
		0	Disable.	
		1	Enable.	
9:6	-	-	Reserved	0011
10	OD		Selects pseudo open-drain mode.	0
		0	Standard GPIO output	
		1	Open-drain output	
31:11	-	-	Reserved	-

8.4.22 IOCON_PIO2_2

Table 126. IOCON_PIO2_2 register (IOCON_PIO2_2, address 0x4004 405C) bit description

Bit	Symbol	Value	Description	Reset value
2:0	FUNC		Selects pin function. All other values are reserved.	000
		0x0	Selects function PIO2_2.	
		0x1	Select function $\overline{\text{DCD}}$.	
		0x2	Select function MISO1.	
4:3	MODE		Selects function mode (on-chip pull-up/pull-down resistor control).	10
		0x0	Inactive (no pull-down/pull-up resistor enabled).	
		0x1	Pull-down resistor enabled.	
		0x2	Pull-up resistor enabled.	
		0x3	Repeater mode.	

All information provided in this document is subject to legal disclaimers.
© NXP B.V. 2012. All rights reserved.

Table 126. IOCON_PIO2_2 register (IOCON_PIO2_2, address 0x4004 405C) bit description

Bit	Symbol	Value	Description	Reset value
5	HYS		Hysteresis.	0
		0	Disable.	
		1	Enable.	
9:6	-	-	Reserved	0011
10	OD		Selects pseudo open-drain mode.	0
		0	Standard GPIO output	
		1	Open-drain output	
31:11	-	-	Reserved	-

8.4.23 IOCON_PIO0_8

Table 127. IOCON_PIO0_8 register (IOCON_PIO0_8, address 0x4004 4060) bit description

Bit	Symbol	Value	Description	Reset value
2:0	FUNC		Selects pin function. All other values are reserved.	000
		0x0	Selects function PIO0_8.	
		0x1	Selects function MISO0.	
		0x2	Selects function CT16B0_MAT0.	
4:3	MODE		Selects function mode (on-chip pull-up/pull-down resistor control).	10
		0x0	Inactive (no pull-down/pull-up resistor enabled).	
		0x1	Pull-down resistor enabled.	
		0x2	Pull-up resistor enabled.	
		0x3	Repeater mode.	
5	HYS		Hysteresis.	0
		0	Disable.	
		1	Enable.	
9:6	-	-	Reserved	0011
10	OD		Selects pseudo open-drain mode.	0
		0	Standard GPIO output	
		1	Open-drain output	
31:11	-	-	Reserved	-

8.4.24 IOCON_PIO0_9

Table 128. IOCON_PIO0_9 register (IOCON_PIO0_9, address 0x4004 4064) bit description

Bit	Symbol	Value	Description	Reset value
2:0	FUNC		Selects pin function. All other values are reserved.	000
		0x0	Selects function PIO0_9.	
		0x1	Selects function MOSI0.	
		0x2	Selects function CT16B0_MAT1.	

All information provided in this document is subject to legal disclaimers. © NXP B.V. 2012. All rights reserved.

Table 128. IOCON_PIO0_9 register (IOCON_PIO0_9, address 0x4004 4064) bit description

Bit	Symbol	Value	Description	Reset value
4:3	MODE		Selects function mode (on-chip pull-up/pull-down resistor control).	10
		0x0	Inactive (no pull-down/pull-up resistor enabled).	
		0x1	Pull-down resistor enabled.	
		0x2	Pull-up resistor enabled.	
		0x3	Repeater mode.	
5	HYS		Hysteresis.	0
		0	Disable.	
		1	Enable.	
9:6	-	-	Reserved	0011
10	OD		Selects pseudo open-drain mode.	0
		0	Standard GPIO output	
		1	Open-drain output	
31:11	-	-	Reserved	-

8.4.25 IOCON_SWCLK_PIO0_10

Table 129. IOCON_SWCLK_PIO0_10 register (IOCON_SWCLK_PIO0_10, address 0x4004 4068) bit description

Bit	Symbol	Value	Description	Reset value
2:0	FUNC		Selects pin function. All other values are reserved.	000
		0x0	Selects function SWCLK.	
		0x1	Selects function PIO0_10.	
		0x2	Selects function SCK0 (only if pin SWCLK/PIO0_10/SCK0/CT16B0_MAT2 selected in Table 147).	
		0x3	Selects function CT16B0_MAT2.	
4:3	MODE		Selects function mode (on-chip pull-up/pull-down resistor control).	10
		0x0	Inactive (no pull-down/pull-up resistor enabled).	
		0x1	Pull-down resistor enabled.	
		0x2	Pull-up resistor enabled.	
		0x3	Repeater mode.	
5	HYS		Hysteresis.	0
		0	Disable.	
		1	Enable.	
9:6	-	-	Reserved	0011
10	OD		Selects pseudo open-drain mode.	0
		0	Standard GPIO output	
		1	Open-drain output	
31:11	-	-	Reserved	-

All information provided in this document is subject to legal disclaimers.
© NXP B.V. 2012. All rights reserved.

8.4.26 IOCON_PIO1_10

Table 130. IOCON_PIO1_10 register (IOCON_PIO1_10, address 0x4004 406C) bit description

Bit	Symbol	Value	Description	Reset value
2:0	FUNC		Selects pin function. All other values are reserved.	000
		0x0	Selects function PIO1_10.	
		0x1	Selects function AD6.	
		0x2	Selects function CT16B1_MAT1.	
		0x3	Selects function MISO1.	
4:3	MODE		Selects function mode (on-chip pull-up/pull-down resistor control).	10
		0x0	Inactive (no pull-down/pull-up resistor enabled).	
		0x1	Pull-down resistor enabled.	
		0x2	Pull-up resistor enabled.	
		0x3	Repeater mode.	
5	HYS		Hysteresis.	0
		0	Disable.	
		1	Enable.	
6	-	-	Reserved	1
7	ADMODE		Selects Analog/Digital mode	1
		0	Analog input mode	
		1	Digital functional mode	
9:8	-	-	Reserved	00
10	OD		Selects pseudo open-drain mode.	0
		0	Standard GPIO output	
		1	Open-drain output	
31:11	-	-	Reserved	-

8.4.27 IOCON_PIO2_11

Table 131. IOCON_PIO2_11 register (IOCON_PIO2_11, address 0x4004 4070) bit description

Bit	Symbol	Value	Description	Reset value
2:0	FUNC		Selects pin function. All other values are reserved.	000
		0x0	Selects function PIO2_11.	
		0x1	Select function SCK0 (only if pin PIO2_11/SCK0 selected in Table 147).	
		0x2	Select function CT32B0_CAP1.	
4:3	MODE		Selects function mode (on-chip pull-up/pull-down resistor control).	10
		0x0	Inactive (no pull-down/pull-up resistor enabled).	
		0x1	Pull-down resistor enabled.	
		0x2	Pull-up resistor enabled.	
		0x3	Repeater mode.	

All information provided in this document is subject to legal disclaimers.
© NXP B.V. 2012. All rights reserved.

Table 131. IOCON_PIO2_11 register (IOCON_PIO2_11, address 0x4004 4070) bit description

Bit	Symbol	Value	Description	Reset value
5	HYS		Hysteresis.	0
		0	Disable.	
		1	Enable.	
9:6	-	-	Reserved	0011
10	OD		Selects pseudo open-drain mode.	0
		0	Standard GPIO output	
		1	Open-drain output	
31:11	-	-	Reserved	-

8.4.28 IOCON_R_PIO0_11

Table 132. IOCON_R_PIO0_11 register (IOCON_R_PIO0_11, address 0x4004 4074) bit description

Bit	Symbol	Value	Description	Reset value
2:0	FUNC		Selects pin function. All other values are reserved.	000
		0x0	Selects function R. This function is reserved. Select one of the alternate functions below.	
		0x1	Selects function PIO0_11.	
		0x2	Selects function AD0.	
		0x3	Selects function CT32B0_MAT3.	
4:3	MODE		Selects function mode (on-chip pull-up/pull-down resistor control).	10
		0x0	Inactive (no pull-down/pull-up resistor enabled).	
		0x1	Pull-down resistor enabled.	
		0x2	Pull-up resistor enabled.	
		0x3	Repeater mode.	
5	HYS		Hysteresis.	0
		0	Disable.	
		1	Enable.	
6	-	-	Reserved	1
7	ADMODE		Selects Analog/Digital mode	1
		0	Analog input mode	
		1	Digital functional mode	
9:8	-	-	Reserved	00
10	OD		Selects pseudo open-drain mode.	0
		0	Standard GPIO output	
		1	Open-drain output	
31:11	-	-	Reserved	-

All information provided in this document is subject to legal disclaimers.
© NXP B.V. 2012. All rights reserved.

8.4.29 IOCON_R_PIO1_0

Table 133. IOCON_R_PIO1_0 register (IOCON_R_PIO1_0, address 0x4004 4078) bit description

Bit	Symbol	Value	Description	Reset value
2:0	FUNC		Selects pin function. All other values are reserved.	000
		0x0	Selects function R. This function is reserved. Select one of the alternate functions below.	
		0x1	Selects function PIO1_0.	
		0x2	Selects function AD1.	
		0x3	Selects function CT32B1_CAP0.	
4:3	MODE		Selects function mode (on-chip pull-up/pull-down resistor control).	10
		0x0	Inactive (no pull-down/pull-up resistor enabled).	
		0x1	Pull-down resistor enabled.	
		0x2	Pull-up resistor enabled.	
		0x3	Repeater mode.	
5	HYS		Hysteresis.	0
		0	Disable.	
		1	Enable.	
6	-	-	Reserved	1
7	ADMODE		Selects Analog/Digital mode	1
		0	Analog input mode	
		1	Digital functional mode	
9:8	-	-	Reserved	00
10	OD		Selects pseudo open-drain mode.	0
		0	Standard GPIO output	
		1	Open-drain output	
31:11	-	-	Reserved	-

8.4.30 IOCON_R_PIO1_1

Table 134. IOCON_R_PIO1_1 register (IOCON_R_PIO1_1, address 0x4004 407C) bit description

Bit	Symbol	Value	Description	Reset value
2:0	FUNC		Selects pin function. All other values are reserved.	000
		0x0	Selects function R. This function is reserved. Select one of the alternate functions below.	
		0x1	Selects function PIO1_1.	
		0x2	Selects function AD2.	
		0x3	Selects function CT32B1_MAT0.	

All information provided in this document is subject to legal disclaimers.
© NXP B.V. 2012. All rights reserved.

Table 134. IOCON_R_PIO1_1 register (IOCON_R_PIO1_1, address 0x4004 407C) bit description *…continued*

Bit	Symbol	Value	Description	Reset value
4:3	MODE		Selects function mode (on-chip pull-up/pull-down resistor control).	10
		0x0	Inactive (no pull-down/pull-up resistor enabled).	
		0x1	Pull-down resistor enabled.	
		0x2	Pull-up resistor enabled.	
		0x3	Repeater mode.	
5	HYS		Hysteresis.	0
		0	Disable.	
		1	Enable.	
6	-	-	Reserved	1
7	ADMODE		Selects Analog/Digital mode	1
		0	Analog input mode	
		1	Digital functional mode	
9:8	-	-	Reserved	00
10	OD		Selects pseudo open-drain mode.	0
		0	Standard GPIO output	
		1	Open-drain output	
31:11	-	-	Reserved	-

8.4.31 IOCON_R_PIO1_2

Table 135. IOCON_R_PIO1_2 register (IOCON_R_PIO1_2, address 0x4004 4080) bit description

Bit	Symbol	Value	Description	Reset value
2:0	FUNC		Selects pin function. All other values are reserved.	000
		0x0	Selects function R. This function is reserved. Select one of the alternate functions below.	
		0x1	Selects function PIO1_2.	
		0x2	Selects function AD3.	
		0x3	Selects function CT32B1_MAT1.	
4:3	MODE		Selects function mode (on-chip pull-up/pull-down resistor control).	10
		0x0	Inactive (no pull-down/pull-up resistor enabled).	
		0x1	Pull-down resistor enabled.	
		0x2	Pull-up resistor enabled.	
		0x3	Repeater mode.	
5	HYS		Hysteresis.	0
		0	Disable.	
		1	Enable.	
6	-	-	Reserved	1

All information provided in this document is subject to legal disclaimers. © NXP B.V. 2012. All rights reserved.

Table 135. IOCON_R_PIO1_2 register (IOCON_R_PIO1_2, address 0x4004 4080) bit description *…continued*

Bit	Symbol	Value	Description	Reset value
7	ADMODE		Selects Analog/Digital mode	1
		0	Analog input mode	
		1	Digital functional mode	
9:8	-	-	Reserved	00
10	OD		Selects pseudo open-drain mode.	0
		0	Standard GPIO output	
		1	Open-drain output	
31:11	-	-	Reserved	-

8.4.32 IOCON_PIO3_0

Table 136. IOCON_PIO3_0 register (IOCON_PIO3_0, address 0x4004 4084) bit description

Bit	Symbol	Value	Description	Reset value
2:0	FUNC		Selects pin function. All other values are reserved.	000
		0x0	Selects function PIO3_0.	
		0x1	Selects function $\overline{\text{DTR}}$.	
		0x2	Selects function CT16B0_MAT0.	
		0x3	Selects function TXD.	
4:3	MODE		Selects function mode (on-chip pull-up/pull-down resistor control).	10
		0x0	Inactive (no pull-down/pull-up resistor enabled).	
		0x1	Pull-down resistor enabled.	
		0x2	Pull-up resistor enabled.	
		0x3	Repeater mode.	
5	HYS		Hysteresis.	0
		0	Disable.	
		1	Enable.	
9:6	-	-	Reserved	0011
10	OD		Selects pseudo open-drain mode.	0
		0	Standard GPIO output	
		1	Open-drain output	
31:11	-	-	Reserved	-

All information provided in this document is subject to legal disclaimers.
© NXP B.V. 2012. All rights reserved.

8.4.33 IOCON_PIO3_1

Table 137. IOCON_PIO3_1 register (IOCON_PIO3_1, address 0x4004 4088) bit description

Bit	Symbol	Value	Description	Reset value
2:0	FUNC		Selects pin function. All other values are reserved.	000
		0x0	Selects function PIO3_1.	
		0x1	Selects function $\overline{\text{DSR}}$.	
		0x2	Selects function CT16B0_MAT1.	
		0x3	Selects function $\overline{\text{RXD}}$.	
4:3	MODE		Selects function mode (on-chip pull-up/pull-down resistor control).	10
		0x0	Inactive (no pull-down/pull-up resistor enabled).	
		0x1	Pull-down resistor enabled.	
		0x2	Pull-up resistor enabled.	
		0x3	Repeater mode.	
5	HYS		Hysteresis.	0
		0	Disable.	
		1	Enable.	
9:6	-	-	Reserved	0011
10	OD		Selects pseudo open-drain mode.	0
		0	Standard GPIO output	
		1	Open-drain output	
31:11	-	-	Reserved	-

8.4.34 IOCON_PIO2_3

Table 138. IOCON_PIO2_3 register (IOCON_PIO2_3, address 0x4004 408C) bit description

Bit	Symbol	Value	Description	Reset value
2:0	FUNC		Selects pin function. All other values are reserved.	000
		0x0	Selects function PIO2_3.	
		0x1	Selects function $\overline{\text{RI}}$.	
		0x2	Selects function MOSI1.	
4:3	MODE		Selects function mode (on-chip pull-up/pull-down resistor control).	10
		0x0	Inactive (no pull-down/pull-up resistor enabled).	
		0x1	Pull-down resistor enabled.	
		0x2	Pull-up resistor enabled.	
		0x3	Repeater mode.	
5	HYS		Hysteresis.	0
		0	Disable.	
		1	Enable.	
9:6	-	-	Reserved	0011

All information provided in this document is subject to legal disclaimers.
© NXP B.V. 2012. All rights reserved.

Table 138. IOCON_PIO2_3 register (IOCON_PIO2_3, address 0x4004 408C) bit description

Bit	Symbol	Value	Description	Reset value
10	OD		Selects pseudo open-drain mode.	0
		0	Standard GPIO output	
		1	Open-drain output	
31:11	-	-	Reserved	-

8.4.35 IOCON_SWDIO_PIO1_3

Table 139. IOCON_SWDIO_PIO1_3 register (IOCON_SWDIO_PIO1_3, address 0x4004 4090) bit description

Bit	Symbol	Value	Description	Reset value
2:0	FUNC		Selects pin function. All other values are reserved.	000
		0x0	Selects function SWDIO.	
		0x1	Selects function PIO1_3.	
		0x2	Selects function AD4.	
		0x3	Selects function CT32B1_MAT2.	
4:3	MODE		Selects function mode (on-chip pull-up/pull-down resistor control).	10
		0x0	Inactive (no pull-down/pull-up resistor enabled).	
		0x1	Pull-down resistor enabled.	
		0x2	Pull-up resistor enabled.	
		0x3	Repeater mode.	
5	HYS		Hysteresis.	0
		0	Disable.	
		1	Enable.	
6	-	-	Reserved	1
7	ADMODE		Selects Analog/Digital mode	1
		0	Analog input mode	
		1	Digital functional mode	
9:8	-	-	Reserved	00
10	OD		Selects pseudo open-drain mode.	0
		0	Standard GPIO output	
		1	Open-drain output	
31:11	-	-	Reserved	-

All information provided in this document is subject to legal disclaimers.
© NXP B.V. 2012. All rights reserved.

8.4.36 IOCON_PIO1_4

Table 140. IOCON_PIO1_4 register (IOCON_PIO1_4, address 0x4004 4094) bit description

Bit	Symbol	Value	Description	Reset value
2:0	FUNC		Selects pin function. This pin functions as WAKEUP pin if the LPC111x/LPC11Cxx is in Deep power-down mode regardless of the value of FUNC. All other values are reserved.	000
		0x0	Selects function PIO1_4.	
		0x1	Selects function AD5.	
		0x2	Selects function CT32B1_MAT3.	
4:3	MODE		Selects function mode (on-chip pull-up/pull-down resistor control).	10
		0x0	Inactive (no pull-down/pull-up resistor enabled).	
		0x1	Pull-down resistor enabled.	
		0x2	Pull-up resistor enabled.	
		0x3	Repeater mode.	
5	HYS		Hysteresis.	0
		0	Disable.	
		1	Enable.	
6	-	-	Reserved	1
7	ADMODE		Selects Analog/Digital mode	1
		0	Analog input mode	
		1	Digital functional mode	
9:8	-	-	Reserved	00
10	OD		Selects pseudo open-drain mode.	0
		0	Standard GPIO output	
		1	Open-drain output	
31:11	-	-	Reserved	-

8.4.37 IOCON_PIO1_11

Table 141. IOCON_PIO1_11 register (IOCON_PIO1_11, address 0x4004 4098) bit description

Bit	Symbol	Value	Description	Reset value
2:0	FUNC		Selects pin function. All other values are reserved.	000
		0x0	Selects function PIO1_11.	
		0x1	Selects function AD7.	
		0x2	Selects function CT32B1_CAP1.	
4:3	MODE		Selects function mode (on-chip pull-up/pull-down resistor control).	10
		0x0	Inactive (no pull-down/pull-up resistor enabled).	
		0x1	Pull-down resistor enabled.	
		0x2	Pull-up resistor enabled.	
		0x3	Repeater mode.	

All information provided in this document is subject to legal disclaimers.
© NXP B.V. 2012. All rights reserved.

Table 141. IOCON_PIO1_11 register (IOCON_PIO1_11, address 0x4004 4098) bit description

Bit	Symbol	Value	Description	Reset value
5	HYS		Hysteresis.	0
		0	Disable.	
		1	Enable.	
6	-	-	Reserved	1
7	ADMODE		Selects Analog/Digital mode	1
		0	Analog input mode	
		1	Digital functional mode	
9:8	-	-	Reserved	00
10	OD		Selects pseudo open-drain mode.	0
		0	Standard GPIO output	
		1	Open-drain output	
31:11	-	-	Reserved	-

8.4.38 IOCON_PIO3_2

Table 142. IOCON_PIO3_2 register (IOCON_PIO3_2, address 0x4004 409C) bit description

Bit	Symbol	Value	Description	Reset value
2:0	FUNC		Selects pin function. All other values are reserved.	000
		0x0	Selects function PIO3_2.	
		0x1	Selects function $\overline{\text{DCD}}$.	
		0x2	Selects function CT16B0_MAT2.	
		0x3	Selects function SCK1.	
4:3	MODE		Selects function mode (on-chip pull-up/pull-down resistor control).	10
		0x0	Inactive (no pull-down/pull-up resistor enabled).	
		0x1	Pull-down resistor enabled.	
		0x2	Pull-up resistor enabled.	
		0x3	Repeater mode.	
5	HYS		Hysteresis.	0
		0	Disable.	
		1	Enable.	
9:6	-	-	Reserved	0011
10	OD		Selects pseudo open-drain mode.	0
		0	Standard GPIO output	
		1	Open-drain output	
31:11	-	-	Reserved	-

All information provided in this document is subject to legal disclaimers.
© NXP B.V. 2012. All rights reserved.

8.4.39 IOCON_PIO1_5

Table 143. IOCON_PIO1_5 register (IOCON_PIO1_5, address 0x4004 40A0) bit description

Bit	Symbol	Value	Description	Reset value
2:0	FUNC		Selects pin function. All other values are reserved.	000
		0x0	Selects function PIO1_5.	
		0x1	Selects function $\overline{\text{RTS}}$.	
		0x2	Selects function CT32B0_CAP0.	
4:3	MODE		Selects function mode (on-chip pull-up/pull-down resistor control).	10
		0x0	Inactive (no pull-down/pull-up resistor enabled).	
		0x1	Pull-down resistor enabled.	
		0x2	Pull-up resistor enabled.	
		0x3	Repeater mode.	
5	HYS		Hysteresis.	0
		0	Disable.	
		1	Enable.	
9:6	-	-	Reserved	0011
10	OD		Selects pseudo open-drain mode.	0
		0	Standard GPIO output	
		1	Open-drain output	
31:11	-	-	Reserved	-

8.4.40 IOCON_PIO1_6

Table 144. IOCON_PIO1_6 register (IOCON_PIO1_6, address 0x4004 40A4) bit description

Bit	Symbol	Value	Description	Reset value
2:0	FUNC		Selects pin function. All other values are reserved.	000
		0x0	Selects function PIO1_6.	
		0x1	Selects function RXD.	
		0x2	Selects function CT32B0_MAT0.	
4:3	MODE		Selects function mode (on-chip pull-up/pull-down resistor control).	10
		0x0	Inactive (no pull-down/pull-up resistor enabled).	
		0x1	Pull-down resistor enabled.	
		0x2	Pull-up resistor enabled.	
		0x3	Repeater mode.	
5	HYS		Hysteresis.	0
		0	Disable.	
		1	Enable.	
9:6	-	-	Reserved	0011

All information provided in this document is subject to legal disclaimers.
© NXP B.V. 2012. All rights reserved.

Table 144. IOCON_PIO1_6 register (IOCON_PIO1_6, address 0x4004 40A4) bit description

Bit	Symbol	Value	Description	Reset value
10	OD		Selects pseudo open-drain mode.	0
		0	Standard GPIO output	
		1	Open-drain output	
31:11	-	-	Reserved	-

8.4.41 IOCON_PIO1_7

Table 145. IOCON_PIO1_7 register (IOCON_PIO1_7, address 0x4004 40A8) bit description

Bit	Symbol	Value	Description	Reset value
2:0	FUNC		Selects pin function. All other values are reserved.	000
		0x0	Selects function PIO1_7.	
		0x1	Selects function TXD.	
		0x2	Selects function CT32B0_MAT1.	
4:3	MODE		Selects function mode (on-chip pull-up/pull-down resistor control).	10
		0x0	Inactive (no pull-down/pull-up resistor enabled).	
		0x1	Pull-down resistor enabled.	
		0x2	Pull-up resistor enabled.	
		0x3	Repeater mode.	
5	HYS		Hysteresis.	0
		0	Disable.	
		1	Enable.	
9:6	-	-	Reserved	0011
10	OD		Selects pseudo open-drain mode.	0
		0	Standard GPIO output	
		1	Open-drain output	
31:11	-	-	Reserved	-

8.4.42 IOCON_PIO3_3

Table 146. IOCON_PIO3_3 register (IOCON_PIO3_3, address 0x4004 40AC) bit description

Bit	Symbol	Value	Description	Reset value
2:0	FUNC		Selects pin function. All other values are reserved.	000
		0x0	Selects function PIO3_3.	
		0x1	Selects function $\overline{\text{RI}}$.	
		0x2	Selects function CT16B0_CAP0.	

All information provided in this document is subject to legal disclaimers.
© NXP B.V. 2012. All rights reserved.

Table 146. IOCON_PIO3_3 register (IOCON_PIO3_3, address 0x4004 40AC) bit description

Bit	Symbol	Value	Description	Reset value
4:3	MODE		Selects function mode (on-chip pull-up/pull-down resistor control).	10
		0x0	Inactive (no pull-down/pull-up resistor enabled).	
		0x1	Pull-down resistor enabled.	
		0x2	Pull-up resistor enabled.	
		0x3	Repeater mode.	
5	HYS		Hysteresis.	0
		0	Disable.	
		1	Enable.	
9:6	-	-	Reserved	0011
10	OD		Selects pseudo open-drain mode.	0
		0	Standard GPIO output	
		1	Open-drain output	
31:11	-	-	Reserved	-

8.4.43 IOCON_SCK0_LOC

Table 147. IOCON SCK0 location register (IOCON_SCK0_LOC, address 0x4004 40B0) bit description

Bit	Symbol	Value	Description	Reset value
1:0	SCKLOC		Selects pin location for SCK0 function.	00
		0x0	Selects SCK0 function in pin location SWCLK/PIO0_10/SCK0/CT16B0_MAT2 (see Table 129).	
		0x1	Selects SCK0 function in pin location PIO2_11/SCK0 (see Table 131).	
		0x2	Selects SCK0 function in pin location PIO0_6/SCK0 (see Table 122).	
		0x3	Reserved.	
31:2	-	-	Reserved.	-

All information provided in this document is subject to legal disclaimers.
© NXP B.V. 2012. All rights reserved.

8.4.44 IOCON_DSR_LOC

Table 148. IOCON $\overline{DSR}$ location register (IOCON_DSR_LOC, address 0x4004 40B4) bit description

Bit	Symbol	Value	Description	Reset value
1:0	DSRLOC		Selects pin location for DSR function.	00
		0x0	Selects $\overline{DSR}$ function in pin location PIO2_1/$\overline{DSR}$/SCK1 (see Table 113).	
		0x1	Selects $\overline{DSR}$ function in pin location PIO3_1/$\overline{DSR}$ (see Table 137).	
		0x2	Reserved.	
		0x3	Reserved.	
31:2	-	-	Reserved.	-

8.4.45 IOCON_DCD_LOC

Table 149. IOCON $\overline{DCD}$ location register (IOCON_DCD_LOC, address 0x4004 40B8) bit description

Bit	Symbol	Value	Description	Reset value
1:0	DCDLOC		Selects pin location for DCD function.	00
		0x0	Selects $\overline{DCD}$ function in pin location PIO2_2/$\overline{DCD}$/MISO1 (see Table 126).	
		0x1	Selects $\overline{DCD}$ function in pin location PIO3_2/$\overline{DCD}$ (see Table 142).	
		0x2	Reserved.	
		0x3	Reserved.	
31:2	-	-	Reserved.	-

8.4.46 IOCON_RI_LOC

Table 150. IOCON $\overline{RI}$ location register (IOCON_RI_LOC, address 0x4004 40BC) bit description

Bit	Symbol	Value	Description	Reset value
1:0	RILOC		Selects pin location for RI function.	00
		0x0	Selects $\overline{RI}$ function in pin location PIO2_3/$\overline{RI}$/MOSI1 (see Table 138).	
		0x1	Selects $\overline{RI}$ function in pin location PIO3_3/$\overline{RI}$ (see Table 146).	
		0x2	Reserved.	
		0x3	Reserved.	
31:2	-	-	Reserved.	-

All information provided in this document is subject to legal disclaimers.

© NXP B.V. 2012. All rights reserved.

8.4.47 IOCON_SSEL1_LOC

Table 151. IOCON SSEL1 location register (IOCON_SSEL1_LOC, address 0x4004 4018) bit description

Bit	Symbol	Value	Description	Reset value
1:0	SSEL1LOC		Selects pin location for SSEL1 function.	00
		0x0	Selects SSEL1 function in pin location PIO2_2/DCD/MISO1 (see Table 126).	
		0x1	Selects SSEL1 function in pin location PIO2_4/CT16B1_MAT1/SSEL1 (see Table 119).	
		0x2	Reserved.	
		0x3	Reserved.	
31:2	-	-	Reserved.	-

8.4.48 IOCON_CT16B0_CAP0_LOC

Table 152. IOCON CT16B0_CAP0 location register (IOCON_CT16B0_CAP0_LOC, address 0x4004 40C0) bit description

Bit	Symbol	Value	Description	Reset value
1:0	CT16B0_CAP0LOC		Selects pin location for CT16B0_CAP0 function.	00
		0x0	Selects CT16B0_CAP0 function in pin location PIO0_2/SSEL0/CT16B0_CAP0 (see Table 110).	
		0x1	Selects CT16B0_CAP0 function in pin location PIO3_3/RI/CT16B0 (see Table 146).	
		0x2	Reserved.	
		0x3	Reserved.	
31:2	-	-	Reserved.	-

8.4.49 IOCON_SCK1_LOC

Table 153. IOCON SCK1 location register (IOCON_SCK1_LOC, address 0x4004 40C4) bit description

Bit	Symbol	Value	Description	Reset value
1:0	SCK1LOC		Selects pin location for SCK1 function.	00
		0x0	Selects SCK1 function in pin location PIO2_1/DSR/SCK1 (see Table 113).	
		0x1	Selects SCK1 function in pin location PIO3_2/DCD/CT16B0_MAT2/SCK1 (see Table 142).	
		0x2	Reserved.	
		0x3	Reserved.	
31:2	-	-	Reserved.	-

All information provided in this document is subject to legal disclaimers.
© NXP B.V. 2012. All rights reserved.

8.4.50 IOCON_MISO1_LOC

Table 154. IOCON MISO1 location register (IOCON_MISO1_LOC, address 0x4004 40C8) bit description

Bit	Symbol	Value	Description	Reset value
1:0	MISO1LOC		Selects pin location for the MISO1 function.	00
		0x0	Selects MISO1 function in pin location PIO2_2/DCD/MISO1 (see Table 126).	
		0x1	Selects MISO1 function in pin location PIO1_10/AD6/CT16B1_MAT1/MISO1 (see Table 130).	
		0x2	Reserved.	
		0x3	Reserved.	
31:2	-	-	Reserved.	-

8.4.51 IOCON_MOSI1_LOC

Table 155. IOCON MOSI1 location register (IOCON_MOSI1_LOC, address 0x4004 40CC) bit description

Bit	Symbol	Value	Description	Reset value
1:0	MOSI1LOC		Selects pin location for the MOSI1 function.	00
		0x0	Selects MOSI1 function in pin location PIO2_3/RI/MOSI1 (see Table 138).	
		0x1	Selects MOSI1 function in pin location PIO1_9/CT16B1_MAT0/MOSI1 (see Table 117).	
		0x2	Reserved.	
		0x3	Reserved.	
31:2	-	-	Reserved.	-

8.4.52 IOCON_CT32B0_CAP0_LOC

Table 156. IOCON CT32B0_CAP0 location register (IOCON_CT32B0_CAP0_LOC, address 0x4004 40D0) bit description

Bit	Symbol	Value	Description	Reset value
1:0	CT32B0_CAP0LOC		Selects pin location for the CT32B0_CAP0 function.	00
		0x0	Selects CT32B0_CAP0 function in pin location PIO1_5/RTS/CT32B0_CAP0 (see Table 143).	
		0x1	Selects CT32B0_CAP0 function in pin location PIO2_9/CT32B0_CAP0 (Table 124).	
		0x2	Reserved.	
		0x3	Reserved.	
31:2	-	-	Reserved.	-

All information provided in this document is subject to legal disclaimers.
© NXP B.V. 2012. All rights reserved.

8.4.53 IOCON_RXD_LOC

Table 157. IOCON RXD location register (IOCON_RXD_LOC, address 0x4004 40D4) bit description

Bit	Symbol	Value	Description	Reset value
1:0	RXDLOC		Selects pin location for the RXD function.	00
		0x0	Selects RXD function in pin location PIO1_6/RXD/CT32B0_MAT0 (see Table 144).	
		0x1	Selects RXD function in pin location PIO2_7/CT32B0_MAT2/RXD (see Table 111).	
		0x2	Selects RXD function in pin location PIO3_1/DSR/CT16B0_MAT1/RXD (see Table 137).	
		0x3	Selects RXD function in pin location PIO3_4/CT16B0_CAP1/RXD (see Table 118).	
31:2	-	-	Reserved.	-

All information provided in this document is subject to legal disclaimers.
© NXP B.V. 2012. All rights reserved.

9.1 How to read this chapter

Remark: This chapter applies to parts in the LPC1100, LPC1100C, and LPC1100L series for LQFP and HVQFN packages.

The LPC111x are available in three packages: LQFP48 (LPC1113, LPC1114), and HVQFN33 (LPC1111, LPC1112, LPC1113, LPC1114).

The LPC11Cxx parts are available in a LQFP48 package.

The LPC11D14 part is available as a dual-chip module in a LQFP100 package.

Table 158. LPC11(D)1x/LPC11Cxx pin configurations

Part		LQFP48	HVQFN24	HVQFN33	LQFP100
LPC1111	Pin configuration	-	-	Figure 17	-
	Pin description	-	-	Table 160	-
LPC1112	Pin configuration	-	Figure 18	Figure 17	-
	Pin description	-	Table 161	Table 160	-
LPC1113	Pin configuration	Figure 16	-	Figure 17	-
	Pin description	Table 159	-	Table 160	-
LPC1114	Pin configuration	Figure 16	-	Figure 17	-
	Pin description	Table 159	-	Table 160	-
LPC11C12	Pin configuration	Figure 19	-	-	-
	Pin description	Table 159	-	-	-
LPC11C14	Pin configuration	Figure 19	-	-	-
	Pin description	Table 159	-	-	-
LPC11C22	Pin configuration	Figure 20	-	-	-
	Pin description	Table 162	-	-	-
LPC11C24	Pin configuration	Figure 20	-	-	-
	Pin description	Table 162	-	-	-
LPC11D14	Pin configuration	-	-	-	Figure 21
	Pin description	-	-	-	Table 163

All information provided in this document is subject to legal disclaimers.

© NXP B.V. 2012. All rights reserved.

9.2 LPC111x Pin configuration

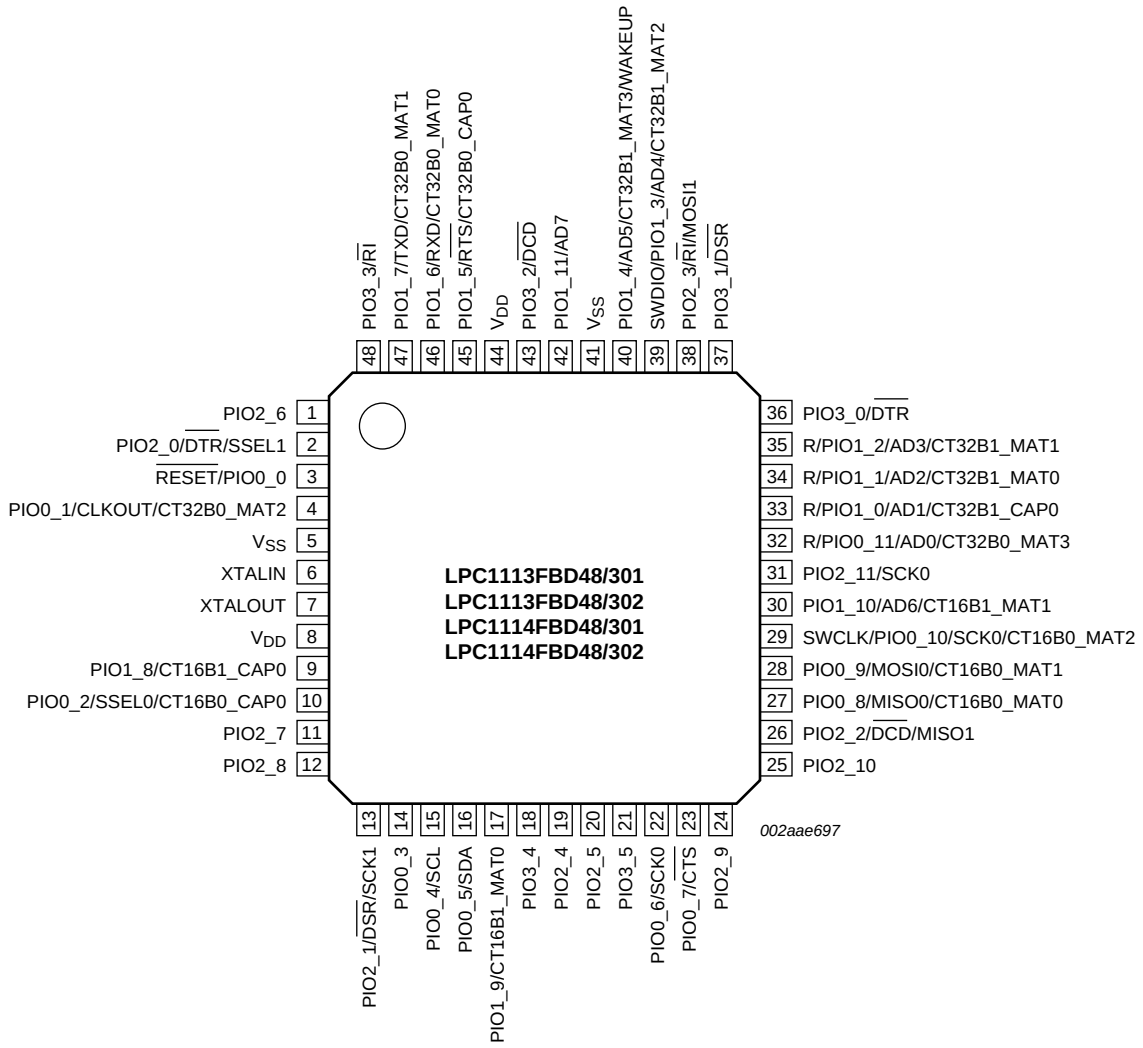

Fig 16. Pin configuration LQFP48 package

All information provided in this document is subject to legal disclaimers.

© NXP B.V. 2012. All rights reserved.

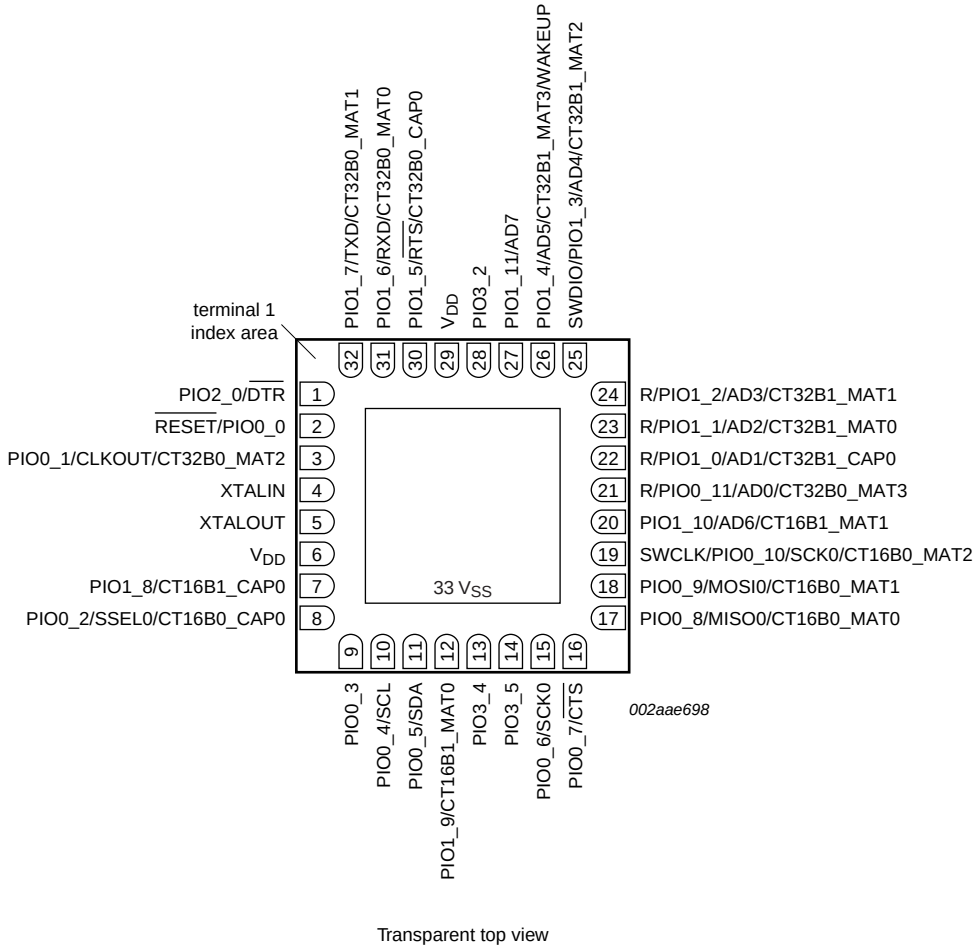

Fig 17. Pin configuration HVQFN33 package

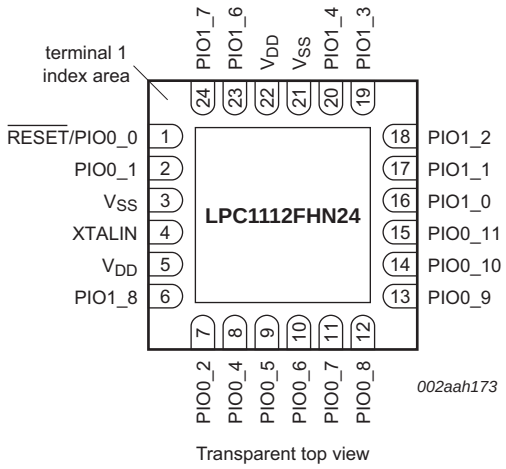

Fig 18. Pin configuration HVQFN24 package

All information provided in this document is subject to legal disclaimers.

© NXP B.V. 2012. All rights reserved.

9.3 LPC11Cxx Pin configuration

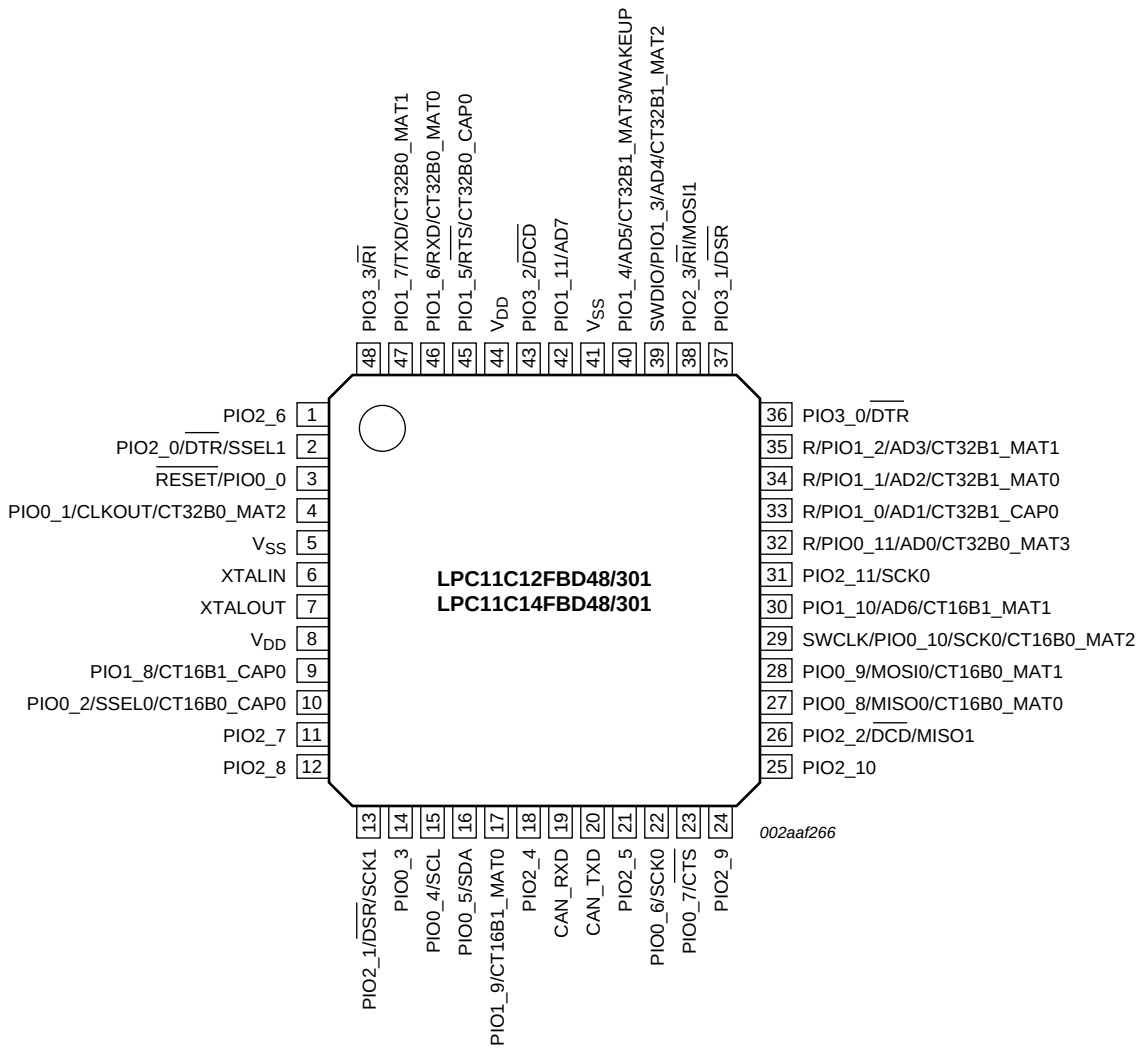

Fig 19. Pin configuration LQFP48 package

All information provided in this document is subject to legal disclaimers.

© NXP B.V. 2012. All rights reserved.

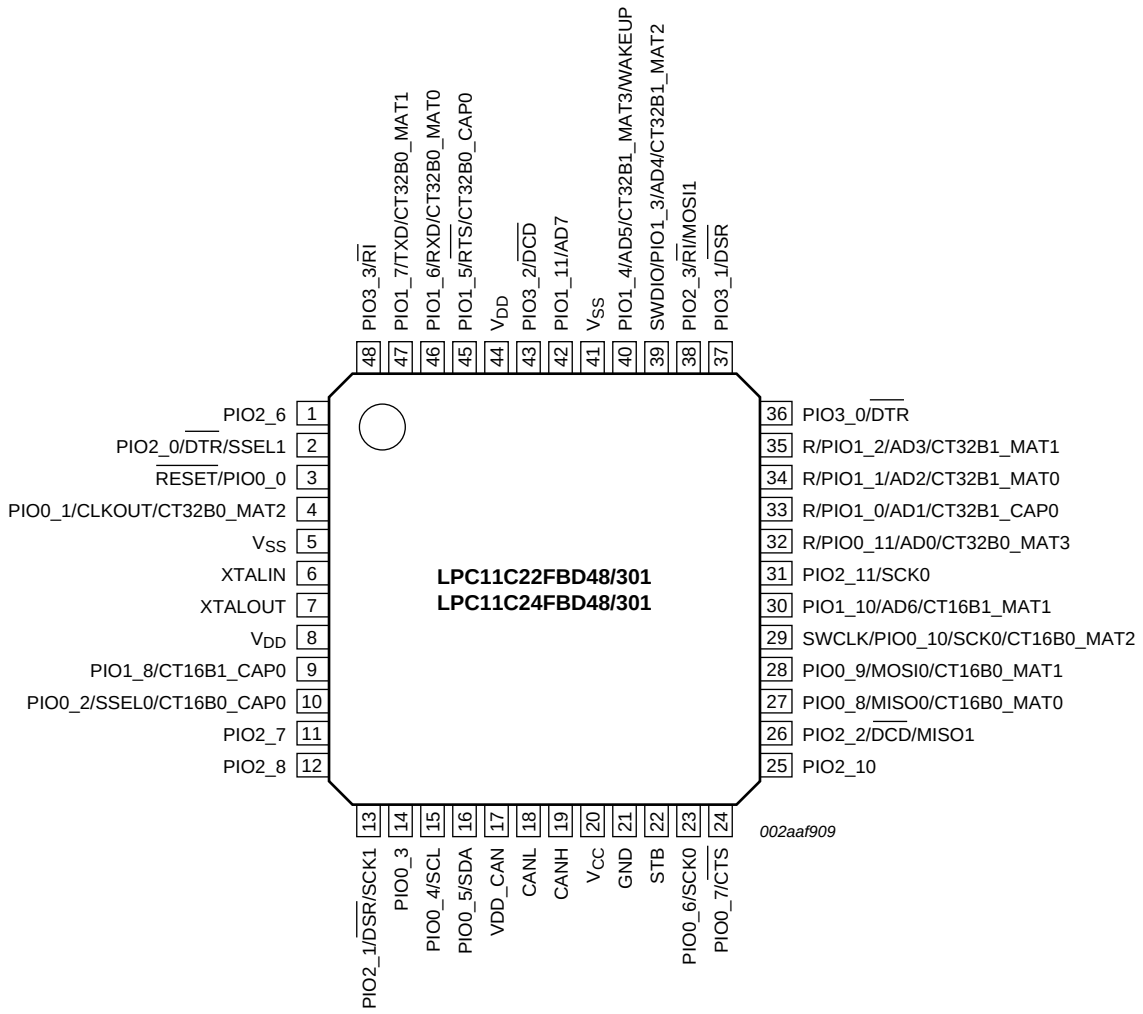

Fig 20. Pin configuration (LPC11C22/C24)

All information provided in this document is subject to legal disclaimers.

© NXP B.V. 2012. All rights reserved.

9.4 LPC11D14 Pin configuration

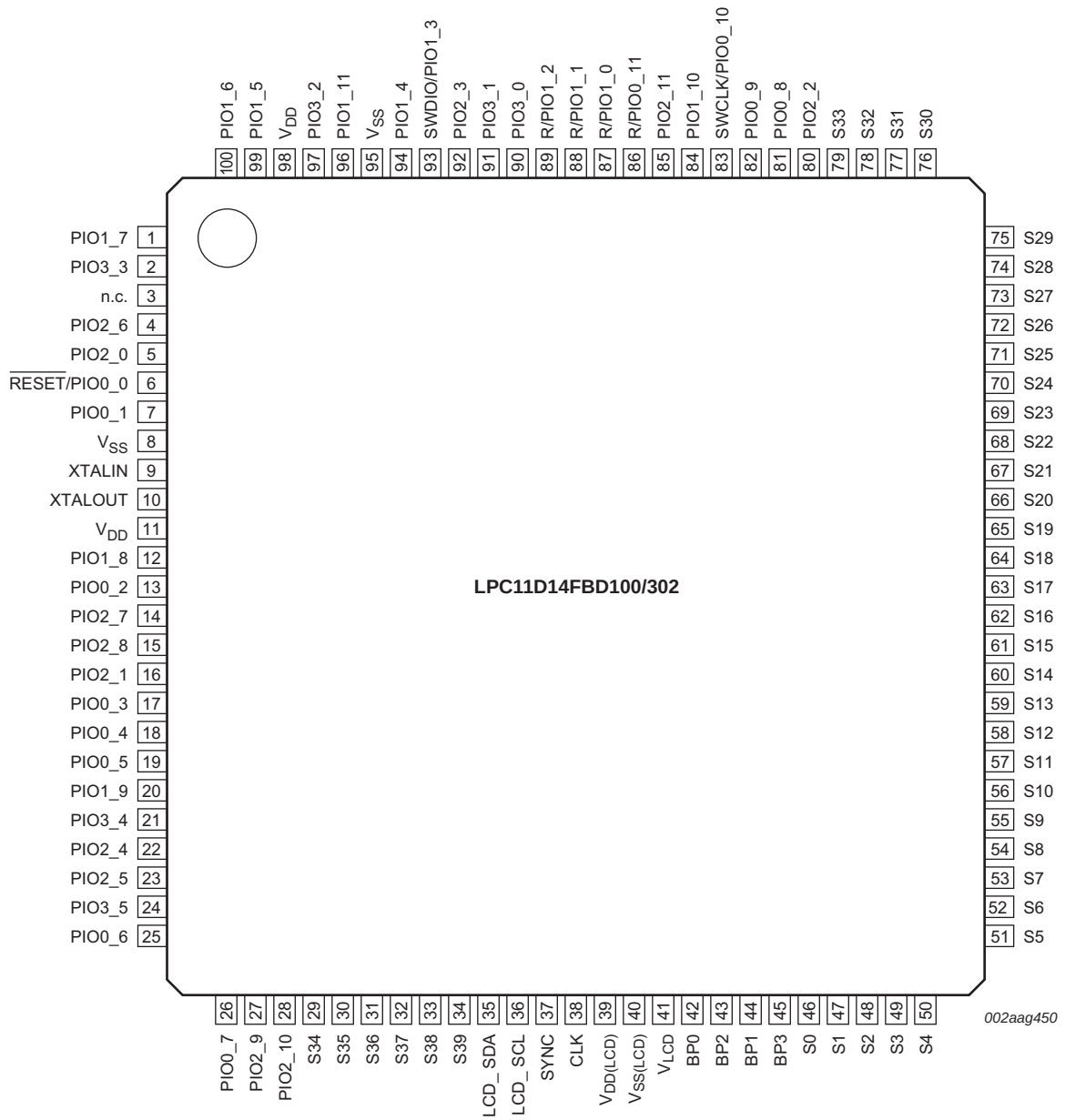

Fig 21. Pin configuration LQFP100 package

All information provided in this document is subject to legal disclaimers.

© NXP B.V. 2012. All rights reserved.

9.5 LPC111x/LPC11Cxx Pin description

Table 159. LPC1113/14 and LPC11C12/C14 pin description table (LQFP48 package)

Symbol	Pin	Type	Description
PIO0_0 to PIO0_11		I/O	**Port 0 —** Port 0 is a 12-bit I/O port with individual direction and function controls for each bit. The operation of port 0 pins depends on the function selected through the IOCONFIG register block.
$\overline{\text{RESET}}$/PIO0_0	3[1][2]	I	**$\overline{\text{RESET}}$ —** External reset input: A LOW on this pin resets the device, causing I/O ports and peripherals to take on their default states, and processor execution to begin at address 0.
		I/O	**PIO0_0 —** General purpose digital input/output pin.
PIO0_1/CLKOUT/ CT32B0_MAT2	4[3][2]	I/O	**PIO0_1 —** General purpose digital input/output pin. A LOW level on this pin during reset starts the flash ISP command handler via UART (if PIO0_3 is HIGH) or via C_CAN (if PIO0_3 is LOW).
		O	**CLKOUT —** Clockout pin.
		O	**CT32B0_MAT2 —** Match output 2 for 32-bit timer 0.
PIO0_2/SSEL0/ CT16B0_CAP0	10[3][2]	I/O	**PIO0_2 —** General purpose digital input/output pin.
		O	**SSEL0 —** Slave Select for SPI0.
		I	**CT16B0_CAP0 —** Capture input 0 for 16-bit timer 0.
PIO0_3	14[3][2]	I/O	**PIO0_3 —** General purpose digital input/output pin. This pin is monitored during reset: Together with a LOW level on pin PIO0_1, a LOW level starts the flash ISP command handler via C_CAN and a HIGH level starts the flash ISP command handler via UART.
PIO0_4/SCL	15[4][2]	I/O	**PIO0_4 —** General purpose digital input/output pin (open-drain).
		I/O	**SCL —** I^2C-bus, open-drain clock input/output. High-current sink only if I^2C Fast-mode Plus is selected in the I/O configuration register.
PIO0_5/SDA	16[4][2]	I/O	**PIO0_5 —** General purpose digital input/output pin (open-drain).
		I/O	**SDA —** I^2C-bus, open-drain data input/output. High-current sink only if I^2C Fast-mode Plus is selected in the I/O configuration register.
PIO0_6/SCK0	22[3][2]	I/O	**PIO0_6 —** General purpose digital input/output pin.
		I/O	**SCK0 —** Serial clock for SPI0.
PIO0_7/$\overline{\text{CTS}}$	23[3][2]	I/O	**PIO0_7 —** General purpose digital input/output pin (high-current output driver).
		I	**$\overline{\text{CTS}}$ —** Clear To Send input for UART.
PIO0_8/MISO0/ CT16B0_MAT0	27[3][2]	I/O	**PIO0_8 —** General purpose digital input/output pin.
		I/O	**MISO0 —** Master In Slave Out for SPI0.
		O	**CT16B0_MAT0 —** Match output 0 for 16-bit timer 0.
PIO0_9/MOSI0/ CT16B0_MAT1	28[3][2]	I/O	**PIO0_9 —** General purpose digital input/output pin.
		I/O	**MOSI0 —** Master Out Slave In for SPI0.
		O	**CT16B0_MAT1 —** Match output 1 for 16-bit timer 0.
SWCLK/PIO0_10/ SCK0/CT16B0_MAT2	29[3][2]	I	**SWCLK —** Serial wire clock.
		I/O	**PIO0_10 —** General purpose digital input/output pin.
		I/O	**SCK0 —** Serial clock for SPI0.
		O	**CT16B0_MAT2 —** Match output 2 for 16-bit timer 0.

All information provided in this document is subject to legal disclaimers. © NXP B.V. 2012. All rights reserved.

Table 159. LPC1113/14 and LPC11C12/C14 pin description table (LQFP48 package) *...continued*

Symbol	Pin	Type	Description
R/PIO0_11/ AD0/CT32B0_MAT3	32[5][2]	I	**R —** Reserved. Configure for an alternate function in the IOCONFIG block.
		I/O	**PIO0_11 —** General purpose digital input/output pin.
		I	**AD0 —** A/D converter, input 0.
		O	**CT32B0_MAT3 —** Match output 3 for 32-bit timer 0.
PIO1_0 to PIO1_11		I/O	**Port 1 —** Port 1 is a 12-bit I/O port with individual direction and function controls for each bit. The operation of port 1 pins depends on the function selected through the IOCONFIG register block.
R/PIO1_0/ AD1/CT32B1_CAP0	33[5][2]	I	**R —** Reserved. Configure for an alternate function in the IOCONFIG block.
		I/O	**PIO1_0 —** General purpose digital input/output pin.
		I	**AD1 —** A/D converter, input 1.
		I	**CT32B1_CAP0 —** Capture input 0 for 32-bit timer 1.
R/PIO1_1/ AD2/CT32B1_MAT0	34[5]	O	**R —** Reserved. Configure for an alternate function in the IOCONFIG block.
		I/O	**PIO1_1 —** General purpose digital input/output pin.
		I	**AD2 —** A/D converter, input 2.
		O	**CT32B1_MAT0 —** Match output 0 for 32-bit timer 1.
R/PIO1_2/ AD3/CT32B1_MAT1	35[5]	I	**R —** Reserved. Configure for an alternate function in the IOCONFIG block.
		I/O	**PIO1_2 —** General purpose digital input/output pin.
		I	**AD3 —** A/D converter, input 3.
		O	**CT32B1_MAT1 —** Match output 1 for 32-bit timer 1.
SWDIO/PIO1_3/AD4/ CT32B1_MAT2	39[5]	I/O	**SWDIO —** Serial wire debug input/output.
		I/O	**PIO1_3 —** General purpose digital input/output pin.
		I	**AD4 —** A/D converter, input 4.
		O	**CT32B1_MAT2 —** Match output 2 for 32-bit timer 1.
PIO1_4/AD5/ CT32B1_MAT3/WAKEUP	40[5]	I/O	**PIO1_4 —** General purpose digital input/output pin.
		I	**AD5 —** A/D converter, input 5.
		O	**CT32B1_MAT3 —** Match output 3 for 32-bit timer 1.
		I	**WAKEUP —** Deep power-down mode wake-up pin. This pin must be pulled HIGH externally to enter Deep power-down mode and pulled LOW to exit Deep power-down mode.
PIO1_5/$\overline{\text{RTS}}$/ CT32B0_CAP0	45[3]	I/O	**PIO1_5 —** General purpose digital input/output pin.
		O	**$\overline{\text{RTS}}$ —** Request To Send output for UART.
		I	**CT32B0_CAP0 —** Capture input 0 for 32-bit timer 0.
PIO1_6/RXD/ CT32B0_MAT0	46[3]	I/O	**PIO1_6 —** General purpose digital input/output pin.
		I	**RXD —** Receiver input for UART.
		O	**CT32B0_MAT0 —** Match output 0 for 32-bit timer 0.
PIO1_7/TXD/ CT32B0_MAT1	47[3]	I/O	**PIO1_7 —** General purpose digital input/output pin.
		O	**TXD —** Transmitter output for UART.
		O	**CT32B0_MAT1 —** Match output 1 for 32-bit timer 0.
PIO1_8/CT16B1_CAP0	9[3]	I/O	**PIO1_8 —** General purpose digital input/output pin.
		I	**CT16B1_CAP0 —** Capture input 0 for 16-bit timer 1.
PIO1_9/CT16B1_MAT0	17[3]	I/O	**PIO1_9 —** General purpose digital input/output pin.
		O	**CT16B1_MAT0 —** Match output 0 for 16-bit timer 1.

All information provided in this document is subject to legal disclaimers. © NXP B.V. 2012. All rights reserved.

Table 159. LPC1113/14 and LPC11C12/C14 pin description table (LQFP48 package) *...continued*

Symbol	Pin	Type	Description
PIO1_10/AD6/ CT16B1_MAT1	30[5]	I/O	**PIO1_10 —** General purpose digital input/output pin.
		I	**AD6 —** A/D converter, input 6.
		O	**CT16B1_MAT1 —** Match output 1 for 16-bit timer 1.
PIO1_11/AD7	42[5]	I/O	**PIO1_11 —** General purpose digital input/output pin.
		I	**AD7 —** A/D converter, input 7.
PIO2_0 to PIO2_11		I/O	**Port 2 —** Port 2 is a 12-bit I/O port with individual direction and function controls for each bit. The operation of port 2 pins depends on the function selected through the IOCONFIG register block.
PIO2_0/$\overline{\text{DTR}}$/SSEL1	2[3]	I/O	**PIO2_0 —** General purpose digital input/output pin.
		O	**$\overline{\text{DTR}}$ —** Data Terminal Ready output for UART.
		O	**SSEL1 —** Slave Select for SPI1.
PIO2_1/$\overline{\text{DSR}}$/SCK1	13[3]	I/O	**PIO2_1 —** General purpose digital input/output pin.
		I	**$\overline{\text{DSR}}$ —** Data Set Ready input for UART.
		I/O	**SCK1 —** Serial clock for SPI1.
PIO2_2/$\overline{\text{DCD}}$/MISO1	26[3]	I/O	**PIO2_2 —** General purpose digital input/output pin.
		I	**$\overline{\text{DCD}}$ —** Data Carrier Detect input for UART.
		I/O	**MISO1 —** Master In Slave Out for SPI1.
PIO2_3/$\overline{\text{RI}}$/MOSI1	38[3]	I/O	**PIO2_3 —** General purpose digital input/output pin.
		I	**$\overline{\text{RI}}$ —** Ring Indicator input for UART.
		I/O	**MOSI1 —** Master Out Slave In for SPI1.
PIO2_4	19[3]	I/O	**PIO2_4 —** General purpose digital input/output pin. (LPC1113/14 only).
PIO2_4	18[3]	I/O	**PIO2_4 —** General purpose digital input/output pin. (LPC11C12/C14 only).
PIO2_5	20[3]	I/O	**PIO2_5 —** General purpose digital input/output pin. LPC1113/14 only).
PIO2_5	21[3]	I/O	**PIO2_5 —** General purpose digital input/output pin. (LPC11C12/C14 only).
PIO2_6	1[3]	I/O	**PIO2_6 —** General purpose digital input/output pin.
PIO2_7	11[3]	I/O	**PIO2_7 —** General purpose digital input/output pin.
PIO2_8	12[3]	I/O	**PIO2_8 —** General purpose digital input/output pin.
PIO2_9	24[3]	I/O	**PIO2_9 —** General purpose digital input/output pin.
PIO2_10	25[3]	I/O	**PIO2_10 —** General purpose digital input/output pin.
PIO2_11/SCK0	31[3]	I/O	**PIO2_11 —** General purpose digital input/output pin.
		I/O	**SCK0 —** Serial clock for SPI0.
PIO3_0 to PIO3_5		I/O	**Port 3 —** Port 3 is a 12-bit I/O port with individual direction and function controls for each bit. The operation of port 3 pins depends on the function selected through the IOCONFIG register block. Pins PIO3_6 to PIO3_11 are not available.
PIO3_0/$\overline{\text{DTR}}$	36[3]	I/O	**PIO3_0 —** General purpose digital input/output pin.
		O	**$\overline{\text{DTR}}$ —** Data Terminal Ready output for UART.
PIO3_1/$\overline{\text{DSR}}$	37[3]	I/O	**PIO3_1 —** General purpose digital input/output pin.
		I	**$\overline{\text{DSR}}$ —** Data Set Ready input for UART.
PIO3_2/$\overline{\text{DCD}}$	43[3]	I/O	**PIO3_2 —** General purpose digital input/output pin.
		I	**$\overline{\text{DCD}}$ —** Data Carrier Detect input for UART.

All information provided in this document is subject to legal disclaimers.

© NXP B.V. 2012. All rights reserved.

Table 159. LPC1113/14 and LPC11C12/C14 pin description table (LQFP48 package) *...continued*

Symbol	Pin	Type	Description
PIO3_3/$\overline{RI}$	48[3]	I/O	**PIO3_3 —** General purpose digital input/output pin.
		I	**$\overline{RI}$ —** Ring Indicator input for UART.
PIO3_4	18[3]	I/O	**PIO3_4 —** General purpose digital input/output pin. (LPC1113/14 only).
PIO3_5	21[3]	I/O	**PIO3_5 —** General purpose digital input/output pin. (LPC1113/14 only).
CAN_RXD	19[6]	I	**CAN_RXD —** C_CAN receive data input. (LPC11C12/14 only).
CAN_TXD	20[6]	O	**CAN_TXD —** C_CAN transmit data output. (LPC11C12/14 only).
V_{DD}	8; 44	I	3.3 V supply voltage to the internal regulator, the external rail, and the ADC. Also used as the ADC reference voltage.
XTALIN	6[7]	I	Input to the oscillator circuit and internal clock generator circuits. Input voltage must not exceed 1.8 V.
XTALOUT	7[7]	O	Output from the oscillator amplifier.
V_{SS}	5; 41	I	Ground.

[1] 5 V tolerant pad. $\overline{RESET}$ functionality is not available in Deep power-down mode. Use the WAKEUP pin to reset the chip and wake up from Deep power-down mode.

[2] Serves as Deep-sleep wake-up input pin to the start logic independently of selected pin function (see the *LPC111x/11C1x user manual*).

[3] 5 V tolerant pad providing digital I/O functions with configurable pull-up/pull-down resistors and configurable hysteresis.

[4] I^2C-bus pads compliant with the I^2C-bus specification for I^2C standard mode and I^2C Fast-mode Plus.

[5] 5 V tolerant pad providing digital I/O functions with configurable pull-up/pull-down resistors, configurable hysteresis, and analog input. When configured as a ADC input, digital section of the pad is disabled and the pin is not 5 V tolerant.

[6] 5 V tolerant digital I/O pad without pull-up/pull-down resistors.

[7] When the system oscillator is not used, connect XTALIN and XTALOUT as follows: XTALIN can be left floating or can be grounded (grounding is preferred to reduce susceptibility to noise). XTALOUT should be left floating.

All information provided in this document is subject to legal disclaimers.
© NXP B.V. 2012. All rights reserved.

Table 160. LPC1111/12/13/14 pin description table (HVQFN33 package)

Symbol	Pin	Type	Description
PIO0_0 to PIO0_11		I/O	**Port 0 —** Port 0 is a 12-bit I/O port with individual direction and function controls for each bit. The operation of port 0 pins depends on the function selected through the IOCONFIG register block.
$\overline{\text{RESET}}$/PIO0_0	2[1][2]	I	**$\overline{\text{RESET}}$ —** External reset input: A LOW on this pin resets the device, causing I/O ports and peripherals to take on their default states, and processor execution to begin at address 0.
		I/O	**PIO0_0 —** General purpose digital input/output pin.
PIO0_1/CLKOUT/ CT32B0_MAT2	3[3][2]	I/O	**PIO0_1 —** General purpose digital input/output pin. A LOW level on this pin during reset starts the ISP command handler.
		O	**CLKOUT —** Clock out pin.
		O	**CT32B0_MAT2 —** Match output 2 for 32-bit timer 0.
PIO0_2/SSEL0/ CT16B0_CAP0	8[3][2]	I/O	**PIO0_2 —** General purpose digital input/output pin.
		O	**SSEL0 —** Slave select for SPI0.
		I	**CT16B0_CAP0 —** Capture input 0 for 16-bit timer 0.
PIO0_3	9[3][2]	I/O	**PIO0_3 —** General purpose digital input/output pin.
PIO0_4/SCL	10[4][2]	I/O	**PIO0_4 —** General purpose digital input/output pin (open-drain).
		I/O	**SCL —** I^2C-bus, open-drain clock input/output. High-current sink only if I^2C Fast-mode Plus is selected in the I/O configuration register.
PIO0_5/SDA	11[4][2]	I/O	**PIO0_5 —** General purpose digital input/output pin (open-drain).
		I/O	**SDA —** I^2C-bus, open-drain data input/output. High-current sink only if I^2C Fast-mode Plus is selected in the I/O configuration register.
PIO0_6/SCK0	15[3][2]	I/O	**PIO0_6 —** General purpose digital input/output pin.
		I/O	**SCK0 —** Serial clock for SPI0.
PIO0_7/$\overline{\text{CTS}}$	16[3][2]	I/O	**PIO0_7 —** General purpose digital input/output pin (high-current output driver).
		I	**$\overline{\text{CTS}}$ —** Clear To Send input for UART.
PIO0_8/MISO0/ CT16B0_MAT0	17[3][2]	I/O	**PIO0_8 —** General purpose digital input/output pin.
		I/O	**MISO0 —** Master In Slave Out for SPI0.
		O	**CT16B0_MAT0 —** Match output 0 for 16-bit timer 0.
PIO0_9/MOSI0/ CT16B0_MAT1	18[3][2]	I/O	**PIO0_9 —** General purpose digital input/output pin.
		I/O	**MOSI0 —** Master Out Slave In for SPI0.
		O	**CT16B0_MAT1 —** Match output 1 for 16-bit timer 0.
SWCLK/PIO0_10/SCK0/ CT16B0_MAT2	19[3][2]	I	**SWCLK —** Serial wire clock.
		I/O	**PIO0_10 —** General purpose digital input/output pin.
		I/O	**SCK0 —** Serial clock for SPI0.
		O	**CT16B0_MAT2 —** Match output 2 for 16-bit timer 0.
R/PIO0_11/AD0/ CT32B0_MAT3	21[5][2]	I	**R —** Reserved. Configure for an alternate function in the IOCONFIG block.
		I/O	**PIO0_11 —** General purpose digital input/output pin.
		I	**AD0 —** A/D converter, input 0.
		O	**CT32B0_MAT3 —** Match output 3 for 32-bit timer 0.
PIO1_0 to PIO1_11		I/O	**Port 1 —** Port 1 is a 12-bit I/O port with individual direction and function controls for each bit. The operation of port 1 pins depends on the function selected through the IOCONFIG register block.

All information provided in this document is subject to legal disclaimers. © NXP B.V. 2012. All rights reserved.

Table 160. LPC1111/12/13/14 pin description table (HVQFN33 package) *…continued*

Symbol	Pin	Type	Description
R/PIO1_0/AD1/ CT32B1_CAP0	22[5][2]	I	**R —** Reserved. Configure for an alternate function in the IOCONFIG block.
		I/O	**PIO1_0 —** General purpose digital input/output pin.
		I	**AD1 —** A/D converter, input 1.
		I	**CT32B1_CAP0 —** Capture input 0 for 32-bit timer 1.
R/PIO1_1/AD2/ CT32B1_MAT0	23[5]	O	**R —** Reserved. Configure for an alternate function in the IOCONFIG block.
		I/O	**PIO1_1 —** General purpose digital input/output pin.
		I	**AD2 —** A/D converter, input 2.
		O	**CT32B1_MAT0 —** Match output 0 for 32-bit timer 1.
R/PIO1_2/AD3/ CT32B1_MAT1	24[5]	I	**R —** Reserved. Configure for an alternate function in the IOCONFIG block.
		I/O	**PIO1_2 —** General purpose digital input/output pin.
		I	**AD3 —** A/D converter, input 3.
		O	**CT32B1_MAT1 —** Match output 1 for 32-bit timer 1.
SWDIO/PIO1_3/AD4/ CT32B1_MAT2	25[5]	I/O	**SWDIO —** Serial wire debug input/output.
		I/O	**PIO1_3 —** General purpose digital input/output pin.
		I	**AD4 —** A/D converter, input 4.
		O	**CT32B1_MAT2 —** Match output 2 for 32-bit timer 1.
PIO1_4/AD5/ CT32B1_MAT3/WAKEUP	26[5]	I/O	**PIO1_4 —** General purpose digital input/output pin.
		I	**AD5 —** A/D converter, input 5.
		O	**CT32B1_MAT3 —** Match output 3 for 32-bit timer 1.
		I	**WAKEUP —** Deep power-down mode wake-up pin. This pin must be pulled HIGH externally to enter Deep power-down mode and pulled LOW to exit Deep power-down mode.
PIO1_5/$\overline{\text{RTS}}$/ CT32B0_CAP0	30[3]	I/O	**PIO1_5 —** General purpose digital input/output pin.
		O	**$\overline{\text{RTS}}$ —** Request To Send output for UART.
		I	**CT32B0_CAP0 —** Capture input 0 for 32-bit timer 0.
PIO1_6/RXD/ CT32B0_MAT0	31[3]	I/O	**PIO1_6 —** General purpose digital input/output pin.
		I	**RXD —** Receiver input for UART.
		O	**CT32B0_MAT0 —** Match output 0 for 32-bit timer 0.
PIO1_7/TXD/ CT32B0_MAT1	32[3]	I/O	**PIO1_7 —** General purpose digital input/output pin.
		O	**TXD —** Transmitter output for UART.
		O	**CT32B0_MAT1 —** Match output 1 for 32-bit timer 0.
PIO1_8/CT16B1_CAP0	7[3]	I/O	**PIO1_8 —** General purpose digital input/output pin.
		I	**CT16B1_CAP0 —** Capture input 0 for 16-bit timer 1.
PIO1_9/CT16B1_MAT0	12[3]	I/O	**PIO1_9 —** General purpose digital input/output pin.
		O	**CT16B1_MAT0 —** Match output 0 for 16-bit timer 1.
PIO1_10/AD6/ CT16B1_MAT1	20[5]	I/O	**PIO1_10 —** General purpose digital input/output pin.
		I	**AD6 —** A/D converter, input 6.
		O	**CT16B1_MAT1 —** Match output 1 for 16-bit timer 1.
PIO1_11/AD7	27[5]	I/O	**PIO1_11 —** General purpose digital input/output pin.
		I	**AD7 —** A/D converter, input 7.

All information provided in this document is subject to legal disclaimers. © NXP B.V. 2012. All rights reserved.

Table 160. LPC1111/12/13/14 pin description table (HVQFN33 package) *…continued*

Symbol	Pin	Type	Description
PIO2_0		I/O	**Port 2 —** Port 2 is a 12-bit I/O port with individual direction and function controls for each bit. The operation of port 2 pins depends on the function selected through the IOCONFIG register block. Pins PIO2_1 to PIO2_11 are not available.
PIO2_0/$\overline{\text{DTR}}$	1[3]	I/O	**PIO2_0 —** General purpose digital input/output pin.
		O	**$\overline{\text{DTR}}$ —** Data Terminal Ready output for UART.
PIO3_0 to PIO3_5		I/O	**Port 3 —** Port 3 is a 12-bit I/O port with individual direction and function controls for each bit. The operation of port 3 pins depends on the function selected through the IOCONFIG register block. Pins PIO3_0, PIO3_1, PIO3_3 and PIO3_6 to PIO3_11 are not available.
PIO3_2	28[3]	I/O	**PIO3_2 —** General purpose digital input/output pin.
PIO3_4	13[3]	I/O	**PIO3_4 —** General purpose digital input/output pin.
PIO3_5	14[3]	I/O	**PIO3_5 —** General purpose digital input/output pin.
V_{DD}	6; 29	I	3.3 V supply voltage to the internal regulator, the external rail, and the ADC. Also used as the ADC reference voltage.
XTALIN	4[6]	I	Input to the oscillator circuit and internal clock generator circuits. Input voltage must not exceed 1.8 V.
XTALOUT	5[6]	O	Output from the oscillator amplifier.
V_{SS}	33	-	Thermal pad. Connect to ground.

[1] 5 V tolerant pad. $\overline{\text{RESET}}$ functionality is not available in Deep power-down mode. Use the WAKEUP pin to reset the chip and wake up from Deep power-down mode.

[2] Serves as Deep-sleep wake-up input pin to the start logic independently of selected pin function (see the *LPC111x/11C1x user manual*).

[3] 5 V tolerant pad providing digital I/O functions with configurable pull-up/pull-down resistors and configurable hysteresis.

[4] I^2C-bus pads compliant with the I^2C-bus specification for I^2C standard mode and I^2C Fast-mode Plus.

[5] 5 V tolerant pad providing digital I/O functions with configurable pull-up/pull-down resistors, configurable hysteresis, and analog input. When configured as a ADC input, digital section of the pad is disabled, and the pin is not 5 V tolerant.

[6] When the system oscillator is not used, connect XTALIN and XTALOUT as follows: XTALIN can be left floating or can be grounded (grounding is preferred to reduce susceptibility to noise). XTALOUT should be left floating.

Table 161. LPC1112FHN24 Pin description table (HVQFN24 package)

Symbol	HVQFN pin	Start logic input	Type	Reset state [1]	Description
$\overline{\text{RESET}}$/PIO0_0	1[1]	yes	I	I; PU	**$\overline{\text{RESET}}$ —** External reset input with 20 ns glitch filter. A LOW-going pulse as short as 50 ns on this pin resets the device, causing I/O ports and peripherals to take on their default states, and processor execution to begin at address 0.
			I/O	-	**PIO0_0 —** General purpose digital input/output pin with 10 ns glitch filter.
PIO0_1/CLKOUT/ CT32B0_MAT2	2[3]	yes	I/O	I; PU	**PIO0_1 —** General purpose digital input/output pin. A LOW level on this pin during reset starts the ISP command handler.
			O	-	**CLKOUT —** Clockout pin.
			O	-	**CT32B0_MAT2 —** Match output 2 for 32-bit timer 0.
PIO0_2/SSEL0/ CT16B0_CAP0	7[3]	yes	I/O	I; PU	**PIO0_2 —** General purpose digital input/output pin.
			I/O	-	**SSEL0 —** Slave Select for SPI0.
			I	-	**CT16B0_CAP0 —** Capture input 0 for 16-bit timer 0.

All information provided in this document is subject to legal disclaimers. © NXP B.V. 2012. All rights reserved.

Table 161. LPC1112FHN24 Pin description table (HVQFN24 package)

Symbol	HVQFN pin	Start logic input	Type	Reset state [1]	Description
PIO0_4/SCL	8[4]	yes	I/O	I; IA	**PIO0_4 —** General purpose digital input/output pin (open-drain).
			I/O	-	**SCL —** I^2C-bus, open-drain clock input/output. High-current sink only if I^2C Fast-mode Plus is selected in the I/O configuration register.
PIO0_5/SDA	9[4]	yes	I/O	I; IA	**PIO0_5 —** General purpose digital input/output pin (open-drain).
			I/O	-	**SDA —** I^2C-bus, open-drain data input/output. High-current sink only if I^2C Fast-mode Plus is selected in the I/O configuration register.
PIO0_6/SCK0	10[3]	yes	I/O	I; PU	**PIO0_6 —** General purpose digital input/output pin.
			I/O	-	**SCK0 —** Serial clock for SPI0.
PIO0_7/$\overline{CTS}$	11[3]	yes	I/O	I; PU	**PIO0_7 —** General purpose digital input/output pin (high-current output driver).
			I	-	**$\overline{CTS}$ —** Clear To Send input for UART.
PIO0_8/MISO0/ CT16B0_MAT0	12[3]	yes	I/O	I; PU	**PIO0_8 —** General purpose digital input/output pin.
			I/O	-	**MISO0 —** Master In Slave Out for SPI0.
			O	-	**CT16B0_MAT0 —** Match output 0 for 16-bit timer 0.
PIO0_9/MOSI0/ CT16B0_MAT1	13[3]	yes	I/O	I; PU	**PIO0_9 —** General purpose digital input/output pin.
			I/O	-	**MOSI0 —** Master Out Slave In for SPI0.
			O	-	**CT16B0_MAT1 —** Match output 1 for 16-bit timer 0.
SWCLK/PIO0_10/ SCK0/ CT16B0_MAT2	14[3]	yes	I	I; PU	**SWCLK —** Serial wire clock.
			I/O	-	**PIO0_10 —** General purpose digital input/output pin.
			I/O	-	**SCK0 —** Serial clock for SPI0.
			O	-	**CT16B0_MAT2 —** Match output 2 for 16-bit timer 0.
R/PIO0_11/ AD0/CT32B0_MAT3	15[5]	yes	I	I; PU	**R —** Reserved. Configure for an alternate function in the IOCONFIG block.
			I/O	-	**PIO0_11 —** General purpose digital input/output pin.
			I	-	**AD0 —** A/D converter, input 0.
			O	-	**CT32B0_MAT3 —** Match output 3 for 32-bit timer 0.
R/PIO1_0/ AD1/CT32B1_CAP0	16[5]	yes	I	I; PU	**R —** Reserved. Configure for an alternate function in the IOCONFIG block.
			I/O	-	**PIO1_0 —** General purpose digital input/output pin.
			I	-	**AD1 —** A/D converter, input 1.
			I	-	**CT32B1_CAP0 —** Capture input 0 for 32-bit timer 1.
R/PIO1_1/ AD2/CT32B1_MAT0	17[5]	no	O	I; PU	**R —** Reserved. Configure for an alternate function in the IOCONFIG block.
			I/O	-	**PIO1_1 —** General purpose digital input/output pin.
			I	-	**AD2 —** A/D converter, input 2.
			O	-	**CT32B1_MAT0 —** Match output 0 for 32-bit timer 1.

All information provided in this document is subject to legal disclaimers. © NXP B.V. 2012. All rights reserved.

Table 161. LPC1112FHN24 Pin description table (HVQFN24 package)

Symbol	HVQFN pin	Start logic input	Type	Reset state [1]	Description
R/PIO1_2/ AD3/CT32B1_MAT1	18[5]	no	I	I; PU	**R —** Reserved. Configure for an alternate function in the IOCONFIG block.
			I/O	-	**PIO1_2 —** General purpose digital input/output pin.
			I	-	**AD3 —** A/D converter, input 3.
			O	-	**CT32B1_MAT1 —** Match output 1 for 32-bit timer 1.
SWDIO/PIO1_3/ AD4/CT32B1_MAT2	19[5]	no	I/O	I; PU	**SWDIO —** Serial wire debug input/output.
			I/O	-	**PIO1_3 —** General purpose digital input/output pin.
			I	-	**AD4 —** A/D converter, input 4.
			O	-	**CT32B1_MAT2 —** Match output 2 for 32-bit timer 1.
PIO1_4/AD5/ CT32B1_MAT3/ WAKEUP	20[5]	no	I/O	I; PU	**PIO1_4 —** General purpose digital input/output pin with 10 ns glitch filter.
			I	-	**AD5 —** A/D converter, input 5.
			O	-	**CT32B1_MAT3 —** Match output 3 for 32-bit timer 1.
			I	-	**WAKEUP —** Deep power-down mode wake-up pin with 20 ns glitch filter. This pin must be pulled HIGH externally to enter Deep power-down mode and pulled LOW to exit Deep power-down mode. A LOW-going pulse as short as 50 ns wakes up the part.
PIO1_6/RXD/ CT32B0_MAT0	23[3]	no	I/O	I; PU	**PIO1_6 —** General purpose digital input/output pin.
			I	-	**RXD —** Receiver input for UART.
			O	-	**CT32B0_MAT0 —** Match output 0 for 32-bit timer 0.
PIO1_7/TXD/ CT32B0_MAT1	24[3]	no	I/O	I; PU	**PIO1_7 —** General purpose digital input/output pin.
			O	-	**TXD —** Transmitter output for UART.
			O	-	**CT32B0_MAT1 —** Match output 1 for 32-bit timer 0.
PIO1_8/ CT16B1_CAP0	6[3]	no	I/O	I; PU	**PIO1_8 —** General purpose digital input/output pin.
			I	-	**CT16B1_CAP0 —** Capture input 0 for 16-bit timer 1.
XTALIN	4[7]	-	I	-	Input to the oscillator circuit and internal clock generator circuits. Input voltage must not exceed 1.8 V.
V_{DD}	5; 22	-	I	-	3.3 V supply voltage to the internal regulator, the external rail, and the ADC. Also used as the ADC reference voltage.
V_{SS}	3; 21	-	I	-	Ground.

[1] Pin state at reset for default function: I = Input; O = Output; PU = internal pull-up enabled (pins pulled up to full V_{DD} level); IA = inactive, no pull-up/down enabled.

[2] $\overline{\text{RESET}}$ functionality is not available in Deep power-down mode. Use the WAKEUP pin to reset the chip and wake up from Deep power-down mode. An external pull-up resistor is required on this pin for the Deep power-down mode.

[3] Pad providing digital I/O functions with configurable pull-up/pull-down resistors and configurable hysteresis.

[4] I^2C-bus pads compliant with the I^2C-bus specification for I^2C standard mode and I^2C Fast-mode Plus.

[5] Pad providing digital I/O functions with configurable pull-up/pull-down resistors, configurable hysteresis, and analog input. When configured as a ADC input, digital section of the pad is disabled.

[6] When the system oscillator is not used, connect XTALIN and XTALOUT as follows: XTALIN can be left floating or can be grounded (grounding is preferred to reduce susceptibility to noise). XTALOUT should be left floating.

All information provided in this document is subject to legal disclaimers. © NXP B.V. 2012. All rights reserved.

Table 162. LPC11C24/C22 pin description table (LQFP48 package)

Symbol	Pin	Type	Description
PIO0_0 to PIO0_11			**Port 0 —** Port 0 is a 12-bit I/O port with individual direction and function controls for each bit. The operation of port 0 pins depends on the function selected through the IOCONFIG register block.
$\overline{\text{RESET}}$/PIO0_0	3[1]	I	**$\overline{\text{RESET}}$ —** External reset input with 20 ns glitch filter. A LOW-going pulse as short as 50 ns on this pin resets the device, causing I/O ports and peripherals to take on their default states, and processor execution to begin at address 0.
		I/O	**PIO0_0 —** General purpose digital input/output pin with 10 ns glitch filter.
PIO0_1/CLKOUT/ CT32B0_MAT2	4[3]	I/O	**PIO0_1 —** General purpose digital input/output pin. A LOW level on this pin during reset starts the flash ISP command handler via UART (if PIO0_3 is HIGH) or via C_CAN (if PIO0_3 is LOW).
		O	**CLKOUT —** Clockout pin.
		O	**CT32B0_MAT2 —** Match output 2 for 32-bit timer 0.
PIO0_2/SSEL0/ CT16B0_CAP0	10[3]	I/O	**PIO0_2 —** General purpose digital input/output pin.
		I/O	**SSEL0 —** Slave Select for SPI0.
		I	**CT16B0_CAP0 —** Capture input 0 for 16-bit timer 0.
PIO0_3	14[3]	I/O	**PIO0_3 —** General purpose digital input/output pin. This pin is monitored during reset: Together with a LOW level on pin PIO0_1, a LOW level starts the flash ISP command handler via C_CAN and a HIGH level starts the flash ISP command handler via UART.
PIO0_4/SCL	15[4]	I/O	**PIO0_4 —** General purpose digital input/output pin (open-drain).
		I/O	**SCL —** I^2C-bus, open-drain clock input/output. High-current sink only if I^2C Fast-mode Plus is selected in the I/O configuration register.
PIO0_5/SDA	16[4]	I/O	**PIO0_5 —** General purpose digital input/output pin (open-drain).
		I/O	**SDA —** I^2C-bus, open-drain data input/output. High-current sink only if I^2C Fast-mode Plus is selected in the I/O configuration register.
PIO0_6/SCK0	23[3]	I/O	**PIO0_6 —** General purpose digital input/output pin.
		I/O	**SCK0 —** Serial clock for SPI0.
PIO0_7/$\overline{\text{CTS}}$	24[3]	I/O	**PIO0_7 —** General purpose digital input/output pin (high-current output driver).
		I	**$\overline{\text{CTS}}$ —** Clear To Send input for UART.
PIO0_8/MISO0/ CT16B0_MAT0	27[3]	I/O	**PIO0_8 —** General purpose digital input/output pin.
		I/O	**MISO0 —** Master In Slave Out for SPI0.
		O	**CT16B0_MAT0 —** Match output 0 for 16-bit timer 0.
PIO0_9/MOSI0/ CT16B0_MAT1	28[3]	I/O	**PIO0_9 —** General purpose digital input/output pin.
		I/O	**MOSI0 —** Master Out Slave In for SPI0.
		O	**CT16B0_MAT1 —** Match output 1 for 16-bit timer 0.
SWCLK/PIO0_10/ SCK0/ CT16B0_MAT2	29[3]	I	**SWCLK —** Serial wire clock.
		I/O	**PIO0_10 —** General purpose digital input/output pin.
		I/O	**SCK0 —** Serial clock for SPI0.
		O	**CT16B0_MAT2 —** Match output 2 for 16-bit timer 0.
R/PIO0_11/ AD0/ CT32B0_MAT3	32[5]	-	**R —** Reserved. Configure for an alternate function in the IOCONFIG block.
		I/O	**PIO0_11 —** General purpose digital input/output pin.
		I	**AD0 —** A/D converter, input 0.
		O	**CT32B0_MAT3 —** Match output 3 for 32-bit timer 0.

All information provided in this document is subject to legal disclaimers. © NXP B.V. 2012. All rights reserved.

Table 162. LPC11C24/C22 pin description table (LQFP48 package)

Symbol	Pin	Type	Description
PIO1_0 to PIO1_11			**Port 1 —** Port 1 is a 12-bit I/O port with individual direction and function controls for each bit. The operation of port 1 pins depends on the function selected through the IOCONFIG register block.
R/PIO1_0/AD1/ CT32B1_CAP0	33[5]	-	**R —** Reserved. Configure for an alternate function in the IOCONFIG block.
		I/O	**PIO1_0 —** General purpose digital input/output pin.
		I	**AD1 —** A/D converter, input 1.
		I	**CT32B1_CAP0 —** Capture input 0 for 32-bit timer 1.
R/PIO1_1/AD2/ CT32B1_MAT0	34[5]	-	**R —** Reserved. Configure for an alternate function in the IOCONFIG block.
		I/O	**PIO1_1 —** General purpose digital input/output pin.
		I	**AD2 —** A/D converter, input 2.
		O	**CT32B1_MAT0 —** Match output 0 for 32-bit timer 1.
R/PIO1_2/AD3/ CT32B1_MAT1	35[5]	-	**R —** Reserved. Configure for an alternate function in the IOCONFIG block.
		I/O	**PIO1_2 —** General purpose digital input/output pin.
		I	**AD3 —** A/D converter, input 3.
		O	**CT32B1_MAT1 —** Match output 1 for 32-bit timer 1.
SWDIO/PIO1_3/ AD4/ CT32B1_MAT2	39[5]	I/O	**SWDIO —** Serial wire debug input/output.
		I/O	**PIO1_3 —** General purpose digital input/output pin.
		I	**AD4 —** A/D converter, input 4.
		O	**CT32B1_MAT2 —** Match output 2 for 32-bit timer 1.
PIO1_4/AD5/ CT32B1_MAT3/ WAKEUP	40[5]	I/O	**PIO1_4 —** General purpose digital input/output pin with 10 ns glitch filter.
		I	**AD5 —** A/D converter, input 5.
		O	**CT32B1_MAT3 —** Match output 3 for 32-bit timer 1.
		I	**WAKEUP —** Deep power-down mode wake-up pin with 20 ns glitch filter. This pin must be pulled HIGH externally to enter Deep power-down mode and pulled LOW to exit Deep power-down mode. A LOW-going pulse as short as 50 ns wakes up the part.
PIO1_5/$\overline{\text{RTS}}$/ CT32B0_CAP0	45[3]	I/O	**PIO1_5 —** General purpose digital input/output pin.
		O	**$\overline{\text{RTS}}$ —** Request To Send output for UART.
		I	**CT32B0_CAP0 —** Capture input 0 for 32-bit timer 0.
PIO1_6/RXD/ CT32B0_MAT0	46[3]	I/O	**PIO1_6 —** General purpose digital input/output pin.
		I	**RXD —** Receiver input for UART.
		O	**CT32B0_MAT0 —** Match output 0 for 32-bit timer 0.
PIO1_7/TXD/ CT32B0_MAT1	47[3]	I/O	**PIO1_7 —** General purpose digital input/output pin.
		O	**TXD —** Transmitter output for UART.
		O	**CT32B0_MAT1 —** Match output 1 for 32-bit timer 0.
PIO1_8/ CT16B1_CAP0	9[3]	I/O	**PIO1_8 —** General purpose digital input/output pin.
		I	**CT16B1_CAP0 —** Capture input 0 for 16-bit timer 1.
PIO1_10/AD6/ CT16B1_MAT1	30[5]	I/O	**PIO1_10 —** General purpose digital input/output pin.
		I	**AD6 —** A/D converter, input 6.
		O	**CT16B1_MAT1 —** Match output 1 for 16-bit timer 1.
PIO1_11/AD7	42[5]	I/O	**PIO1_11 —** General purpose digital input/output pin.
		I	**AD7 —** A/D converter, input 7.

All information provided in this document is subject to legal disclaimers.
© NXP B.V. 2012. All rights reserved.

Table 162. LPC11C24/C22 pin description table (LQFP48 package)

Symbol	Pin	Type	Description
PIO2_0 to PIO2_11			**Port 2 —** Port 2 is a 12-bit I/O port with individual direction and function controls for each bit. The operation of port 2 pins depends on the function selected through the IOCONFIG register block.
PIO2_0/$\overline{\text{DTR}}$/ SSEL1	2[3]	I/O	**PIO2_0 —** General purpose digital input/output pin.
		I/O	**$\overline{\text{DTR}}$ —** Data Terminal Ready output for UART.
		I/O	**SSEL1 —** Slave Select for SPI1.
PIO2_1/$\overline{\text{DSR}}$/SCK1	13[3]	I/O	**PIO2_1 —** General purpose digital input/output pin.
		I	**$\overline{\text{DSR}}$ —** Data Set Ready input for UART.
		I/O	**SCK1 —** Serial clock for SPI1.
PIO2_2/$\overline{\text{DCD}}$/ MISO1	26[3]	I/O	**PIO2_2 —** General purpose digital input/output pin.
		I	**$\overline{\text{DCD}}$ —** Data Carrier Detect input for UART.
		I/O	**MISO1 —** Master In Slave Out for SPI1.
PIO2_3/$\overline{\text{RI}}$/MOSI1	38[3]	I/O	**PIO2_3 —** General purpose digital input/output pin.
		I	**$\overline{\text{RI}}$ —** Ring Indicator input for UART.
		I/O	**MOSI1 —** Master Out Slave In for SPI1.
PIO2_6	1[3]	I/O	**PIO2_6 —** General purpose digital input/output pin.
PIO2_7	11[3]	I/O	**PIO2_7 —** General purpose digital input/output pin.
PIO2_8	12[3]	I/O	**PIO2_8 —** General purpose digital input/output pin.
PIO2_10	25[3]	I/O	**PIO2_10 —** General purpose digital input/output pin.
PIO2_11/SCK0	31[3]	I/O	**PIO2_11 —** General purpose digital input/output pin.
		I/O	**SCK0 —** Serial clock for SPI0.
PIO3_0 to PIO3_3			**Port 3 —** Port 3 is a 12-bit I/O port with individual direction and function controls for each bit. The operation of port 3 pins depends on the function selected through the IOCONFIG register block. Pins PIO3_4 to PIO3_11 are not available.
PIO3_0/$\overline{\text{DTR}}$	36[3]	I/O	**PIO3_0 —** General purpose digital input/output pin.
		O	**$\overline{\text{DTR}}$ —** Data Terminal Ready output for UART.
PIO3_1/$\overline{\text{DSR}}$	37[3]	I/O	**PIO3_1 —** General purpose digital input/output pin.
		I	**$\overline{\text{DSR}}$ —** Data Set Ready input for UART.
PIO3_2/$\overline{\text{DCD}}$	43[3]	I/O	**PIO3_2 —** General purpose digital input/output pin.
		I	**$\overline{\text{DCD}}$ —** Data Carrier Detect input for UART.
PIO3_3/$\overline{\text{RI}}$	48[3]	I/O	**PIO3_3 —** General purpose digital input/output pin.
		I	**$\overline{\text{RI}}$ —** Ring Indicator input for UART.
CANL	18	I/O	LOW-level CAN bus line.
CANH	19	I/O	HIGH-level CAN bus line.
STB	22	I	Silent mode control input for CAN transceiver (LOW = Normal mode, HIGH = silent mode).
VDD_CAN	17	-	Supply voltage for I/O level of CAN transceiver.
V_{CC}	20	-	Supply voltage for CAN transceiver.
GND	21	-	Ground for CAN transceiver.
V_{DD}	8;44	I	Supply voltage to the internal regulator, the external rail, and the ADC. Also used as the ADC reference voltage.

All information provided in this document is subject to legal disclaimers. © NXP B.V. 2012. All rights reserved.

Table 162. LPC11C24/C22 pin description table (LQFP48 package)

Symbol	Pin	Type	Description
XTALIN	6[7]	I	Input to the oscillator circuit and internal clock generator circuits. Input voltage must not exceed 1.8 V.
XTALOUT	7[7]	O	Output from the oscillator amplifier.
V_{SS}	5; 41	I	Ground.

[1] 5 V tolerant pad. $\overline{\text{RESET}}$ functionality is not available in Deep power-down mode. Use the WAKEUP pin to reset the chip and wake up from Deep power-down mode. An external pull-up resistor is required on this pin for the Deep power-down mode.

[2] 5 V tolerant pad providing digital I/O functions with configurable pull-up/pull-down resistors and configurable hysteresis.

[3] I^2C-bus pads compliant with the I^2C-bus specification for I^2C standard mode and I^2C Fast-mode Plus.

[4] 5 V tolerant pad providing digital I/O functions with configurable pull-up/pull-down resistors, configurable hysteresis, and analog input. When configured as a ADC input, digital section of the pad is disabled and the pin is not 5 V tolerant.

[5] 5 V tolerant digital I/O pad without pull-up/pull-down resistors.

[6] When the system oscillator is not used, connect XTALIN and XTALOUT as follows: XTALIN can be left floating or can be grounded (grounding is preferred to reduce susceptibility to noise). XTALOUT should be left floating.

Table 163. LPC11D14 pin description table (LQFP100 package)

Symbol	Pin	Start logic input	Type	Reset state [1]	Description
Microcontroller pins					
PIO0_0 to PIO0_11			I/O		**Port 0 —** Port 0 is a 12-bit I/O port with individual direction and function controls for each bit. The operation of port 0 pins depends on the function selected through the IOCONFIG register block.
$\overline{\text{RESET}}$/PIO0_0	6[1]	yes	I	I; PU	**$\overline{\text{RESET}}$ —** External reset input with 20 ns glitch filter. A LOW-going pulse as short as 50 ns on this pin resets the device, causing I/O ports and peripherals to take on their default states, and processor execution to begin at address 0.
			I/O	-	**PIO0_0 —** General purpose digital input/output pin with 10 ns glitch filter.
PIO0_1/CLKOUT/ CT32B0_MAT2	7[3]	yes	I/O	I; PU	**PIO0_1 —** General purpose digital input/output pin. A LOW level on this pin during reset starts the ISP command handler.
			O	-	**CLKOUT —** Clockout pin.
			O	-	**CT32B0_MAT2 —** Match output 2 for 32-bit timer 0.
PIO0_2/SSEL0/ CT16B0_CAP0	13[3]	yes	I/O	I; PU	**PIO0_2 —** General purpose digital input/output pin.
			I/O	-	**SSEL0 —** Slave Select for SPI0.
			I	-	**CT16B0_CAP0 —** Capture input 0 for 16-bit timer 0.
PIO0_3	17[3]	yes	I/O	I; PU	**PIO0_3 —** General purpose digital input/output pin.
PIO0_4/SCL	18[4]	yes	I/O	I; IA	**PIO0_4 —** General purpose digital input/output pin (open-drain).
			I/O	-	**SCL —** I^2C-bus, open-drain clock input/output. High-current sink only if I^2C Fast-mode Plus is selected in the I/O configuration register.

All information provided in this document is subject to legal disclaimers. © NXP B.V. 2012. All rights reserved.

Table 163. LPC11D14 pin description table (LQFP100 package) *...continued*

Symbol	Pin	Start logic input	Type	Reset state [1]	Description
PIO0_5/SDA	19[4]	yes	I/O	I; IA	**PIO0_5 —** General purpose digital input/output pin (open-drain).
			I/O	-	**SDA —** I^2C-bus, open-drain data input/output. High-current sink only if I^2C Fast-mode Plus is selected in the I/O configuration register.
PIO0_6/SCK0	25[3]	yes	I/O	I; PU	**PIO0_6 —** General purpose digital input/output pin.
			I/O	-	**SCK0 —** Serial clock for SPI0.
PIO0_7/$\overline{CTS}$	26[3]	yes	I/O	I; PU	**PIO0_7 —** General purpose digital input/output pin (high-current output driver).
			I	-	**$\overline{CTS}$ —** Clear To Send input for UART.
PIO0_8/MISO0/ CT16B0_MAT0	81[3]	yes	I/O	I; PU	**PIO0_8 —** General purpose digital input/output pin.
			I/O	-	**MISO0 —** Master In Slave Out for SPI0.
			O	-	**CT16B0_MAT0 —** Match output 0 for 16-bit timer 0.
PIO0_9/MOSI0/ CT16B0_MAT1	82[3]	yes	I/O	I; PU	**PIO0_9 —** General purpose digital input/output pin.
			I/O	-	**MOSI0 —** Master Out Slave In for SPI0.
			O	-	**CT16B0_MAT1 —** Match output 1 for 16-bit timer 0.
SWCLK/PIO0_10/ SCK0/ CT16B0_MAT2	83[3]	yes	I	I; PU	**SWCLK —** Serial wire clock.
			I/O	-	**PIO0_10 —** General purpose digital input/output pin.
			I/O	-	**SCK0 —** Serial clock for SPI0.
			O	-	**CT16B0_MAT2 —** Match output 2 for 16-bit timer 0.
R/PIO0_11/ AD0/CT32B0_MAT3	86[5]	yes	I	I; PU	**R —** Reserved. Configure for an alternate function in the IOCONFIG block.
			I/O	-	**PIO0_11 —** General purpose digital input/output pin.
			I	-	**AD0 —** A/D converter, input 0.
			O	-	**CT32B0_MAT3 —** Match output 3 for 32-bit timer 0.
PIO1_0 to PIO1_11			I/O		**Port 1 —** Port 1 is a 12-bit I/O port with individual direction and function controls for each bit. The operation of port 1 pins depends on the function selected through the IOCONFIG register block.
R/PIO1_0/ AD1/CT32B1_CAP0	87[5]	yes	I	I; PU	**R —** Reserved. Configure for an alternate function in the IOCONFIG block.
			I/O	-	**PIO1_0 —** General purpose digital input/output pin.
			I	-	**AD1 —** A/D converter, input 1.
			I	-	**CT32B1_CAP0 —** Capture input 0 for 32-bit timer 1.
R/PIO1_1/ AD2/CT32B1_MAT0	88[5]	no	O	I; PU	**R —** Reserved. Configure for an alternate function in the IOCONFIG block.
			I/O	-	**PIO1_1 —** General purpose digital input/output pin.
			I	-	**AD2 —** A/D converter, input 2.
			O	-	**CT32B1_MAT0 —** Match output 0 for 32-bit timer 1.

All information provided in this document is subject to legal disclaimers. © NXP B.V. 2012. All rights reserved.

Table 163. LPC11D14 pin description table (LQFP100 package) *...continued*

Symbol	Pin	Start logic input	Type	Reset state [1]	Description
R/PIO1_2/ AD3/CT32B1_MAT1	89[5]	no	I	I; PU	**R —** Reserved. Configure for an alternate function in the IOCONFIG block.
			I/O	-	**PIO1_2 —** General purpose digital input/output pin.
			I	-	**AD3 —** A/D converter, input 3.
			O	-	**CT32B1_MAT1 —** Match output 1 for 32-bit timer 1.
SWDIO/PIO1_3/ AD4/CT32B1_MAT2	93[5]	no	I/O	I; PU	**SWDIO —** Serial wire debug input/output.
			I/O	-	**PIO1_3 —** General purpose digital input/output pin.
			I	-	**AD4 —** A/D converter, input 4.
			O	-	**CT32B1_MAT2 —** Match output 2 for 32-bit timer 1.
PIO1_4/AD5/ CT32B1_MAT3/ WAKEUP	94[5]	no	I/O	I; PU	**PIO1_4 —** General purpose digital input/output pin with 10 ns glitch filter.
			I	-	**AD5 —** A/D converter, input 5.
			O	-	**CT32B1_MAT3 —** Match output 3 for 32-bit timer 1.
			I	-	**WAKEUP —** Deep power-down mode wake-up pin with 20 ns glitch filter. This pin must be pulled HIGH externally to enter Deep power-down mode and pulled LOW to exit Deep power-down mode. A LOW-going pulse as short as 50 ns wakes up the part.
PIO1_5/$\overline{\text{RTS}}$/ CT32B0_CAP0	99[3]	no	I/O	I; PU	**PIO1_5 —** General purpose digital input/output pin.
			O	-	**$\overline{\text{RTS}}$ —** Request To Send output for UART.
			I	-	**CT32B0_CAP0 —** Capture input 0 for 32-bit timer 0.
PIO1_6/RXD/ CT32B0_MAT0	100[3]	no	I/O	I; PU	**PIO1_6 —** General purpose digital input/output pin.
			I	-	**RXD —** Receiver input for UART.
			O	-	**CT32B0_MAT0 —** Match output 0 for 32-bit timer 0.
PIO1_7/TXD/ CT32B0_MAT1	1[3]	no	I/O	I; PU	**PIO1_7 —** General purpose digital input/output pin.
			O	-	**TXD —** Transmitter output for UART.
			O	-	**CT32B0_MAT1 —** Match output 1 for 32-bit timer 0.
PIO1_8/ CT16B1_CAP0	12[3]	no	I/O	I; PU	**PIO1_8 —** General purpose digital input/output pin.
			I	-	**CT16B1_CAP0 —** Capture input 0 for 16-bit timer 1.
PIO1_9/ CT16B1_MAT0	20[3]	no	I/O	I; PU	**PIO1_9 —** General purpose digital input/output pin.
			O	-	**CT16B1_MAT0 —** Match output 0 for 16-bit timer 1.
PIO1_10/AD6/ CT16B1_MAT1	84[5]	no	I/O	I; PU	**PIO1_10 —** General purpose digital input/output pin.
			I	-	**AD6 —** A/D converter, input 6.
			O	-	**CT16B1_MAT1 —** Match output 1 for 16-bit timer 1.
PIO1_11/AD7	96[5]	no	I/O	I; PU	**PIO1_11 —** General purpose digital input/output pin.
			I	-	**AD7 —** A/D converter, input 7.
PIO2_0 to PIO2_11			I/O		**Port 2 —** Port 2 is a 12-bit I/O port with individual direction and function controls for each bit. The operation of port 2 pins depends on the function selected through the IOCONFIG register block.

All information provided in this document is subject to legal disclaimers.

© NXP B.V. 2012. All rights reserved.

Table 163. LPC11D14 pin description table (LQFP100 package) *...continued*

Symbol	Pin	Start logic input	Type	Reset state [1]	Description
PIO2_0/$\overline{\text{DTR}}$/SSEL1	5[3]	no	I/O	I; PU	**PIO2_0 —** General purpose digital input/output pin.
			O	-	**$\overline{\text{DTR}}$ —** Data Terminal Ready output for UART.
			I/O	-	**SSEL1 —** Slave Select for SPI1.
PIO2_1/$\overline{\text{DSR}}$/SCK1	16[3]	no	I/O	I; PU	**PIO2_1 —** General purpose digital input/output pin.
			I	-	**$\overline{\text{DSR}}$ —** Data Set Ready input for UART.
			I/O	-	**SCK1 —** Serial clock for SPI1.
PIO2_2/$\overline{\text{DCD}}$/MISO1	80[3]	no	I/O	I; PU	**PIO2_2 —** General purpose digital input/output pin.
			I	-	**$\overline{\text{DCD}}$ —** Data Carrier Detect input for UART.
			I/O	-	**MISO1 —** Master In Slave Out for SPI1.
PIO2_3/$\overline{\text{RI}}$/MOSI1	92[3]	no	I/O	I; PU	**PIO2_3 —** General purpose digital input/output pin.
			I	-	**$\overline{\text{RI}}$ —** Ring Indicator input for UART.
			I/O	-	**MOSI1 —** Master Out Slave In for SPI1.
PIO2_4	22[3]	no	I/O	I; PU	**PIO2_4 —** General purpose digital input/output pin.
PIO2_5	23[3]	no	I/O	I; PU	**PIO2_5 —** General purpose digital input/output pin.
PIO2_6	4[3]	no	I/O	I; PU	**PIO2_6 —** General purpose digital input/output pin.
PIO2_7	14[3]	no	I/O	I; PU	**PIO2_7 —** General purpose digital input/output pin.
PIO2_8	15[3]	no	I/O	I; PU	**PIO2_8 —** General purpose digital input/output pin.
PIO2_9	27[3]	no	I/O	I; PU	**PIO2_9 —** General purpose digital input/output pin.
PIO2_10	28[3]	no	I/O	I; PU	**PIO2_10 —** General purpose digital input/output pin.
PIO2_11/SCK0	85[3]	no	I/O	I; PU	**PIO2_11 —** General purpose digital input/output pin.
			I/O	-	**SCK0 —** Serial clock for SPI0.
PIO3_0 to PIO3_5			I/O		**Port 3 —** Port 3 is a 12-bit I/O port with individual direction and function controls for each bit. The operation of port 3 pins depends on the function selected through the IOCONFIG register block. Pins PIO3_6 to PIO3_11 are not available.
PIO3_0/$\overline{\text{DTR}}$	90[3]	no	I/O	I; PU	**PIO3_0 —** General purpose digital input/output pin.
			O	-	**$\overline{\text{DTR}}$ —** Data Terminal Ready output for UART.
PIO3_1/$\overline{\text{DSR}}$	91[3]	no	I/O	I; PU	**PIO3_1 —** General purpose digital input/output pin.
			I	-	**$\overline{\text{DSR}}$ —** Data Set Ready input for UART.
PIO3_2/$\overline{\text{DCD}}$	97[3]	no	I/O	I; PU	**PIO3_2 —** General purpose digital input/output pin.
			I	-	**$\overline{\text{DCD}}$ —** Data Carrier Detect input for UART.
PIO3_3/$\overline{\text{RI}}$	2[3]	no	I/O	I; PU	**PIO3_3 —** General purpose digital input/output pin.
			I	-	**$\overline{\text{RI}}$ —** Ring Indicator input for UART.
PIO3_4	21[3]	no	I/O	I; PU	**PIO3_4 —** General purpose digital input/output pin.
PIO3_5	24[3]	no	I/O	I; PU	**PIO3_5 —** General purpose digital input/output pin.
V_{DD}	11; 98	-	I	-	3.3 V supply voltage to the internal regulator, the external rail, and the ADC. Also used as the ADC reference voltage.
XTALIN	9[7]	-	I	-	Input to the oscillator circuit and internal clock generator circuits. Input voltage must not exceed 1.8 V.
XTALOUT	10[7]	-	O	-	Output from the oscillator amplifier.
V_{SS}	8; 95	-	I	-	Ground.

All information provided in this document is subject to legal disclaimers. © NXP B.V. 2012. All rights reserved.

Table 163. LPC11D14 pin description table (LQFP100 package) *...continued*

Symbol	Pin	Start logic input	Type	Reset state [1]	Description
LCD display pins					
S0	46	-	O	V_{LCD}[7]	LCD segment output.
S1	47	-	O	V_{LCD}[7]	LCD segment output.
S2	48	-	O	V_{LCD}[7]	LCD segment output.
S3	49	-	O	V_{LCD}[7]	LCD segment output.
S4	50	-	O	V_{LCD}[7]	LCD segment output.
S5	51	-	O	V_{LCD}[7]	LCD segment output.
S6	52	-	O	V_{LCD}[7]	LCD segment output.
S7	53	-	O	V_{LCD}[7]	LCD segment output.
S8	54	-	O	V_{LCD}[7]	LCD segment output.
S9	55	-	O	V_{LCD}[7]	LCD segment output.
S10	56	-	O	V_{LCD}[7]	LCD segment output.
S11	57	-	O	V_{LCD}[7]	LCD segment output.
S12	58	-	O	V_{LCD}[7]	LCD segment output.
S13	59	-	O	V_{LCD}[7]	LCD segment output.
S14	60	-	O	V_{LCD}[7]	LCD segment output.
S15	61	-	O	V_{LCD}[7]	LCD segment output.
S16	62	-	O	V_{LCD}[7]	LCD segment output.
S17	63	-	O	V_{LCD}[7]	LCD segment output.
S18	64	-	O	V_{LCD}[7]	LCD segment output.
S19	65	-	O	V_{LCD}[7]	LCD segment output.
S20	66	-	O	V_{LCD}[7]	LCD segment output.
S21	67	-	O	V_{LCD}[7]	LCD segment output.
S22	68	-	O	V_{LCD}[7]	LCD segment output.
S23	69	-	O	V_{LCD}[7]	LCD segment output.
S24	70	-	O	V_{LCD}[7]	LCD segment output.
S25	71	-	O	V_{LCD}[7]	LCD segment output.
S26	72	-	O	V_{LCD}[7]	LCD segment output.
S27	73	-	O	V_{LCD}[7]	LCD segment output.
S28	74	-	O	V_{LCD}[7]	LCD segment output.
S29	75	-	O	V_{LCD}[7]	LCD segment output.
S30	76	-	O	V_{LCD}[7]	LCD segment output.
S31	77	-	O	V_{LCD}[7]	LCD segment output.
S32	78	-	O	V_{LCD}[7]	LCD segment output.
S33	79	-	O	V_{LCD}[7]	LCD segment output.
S34	29	-	O	V_{LCD}[7]	LCD segment output.
S35	30	-	O	V_{LCD}[7]	LCD segment output.
S36	31	-	O	V_{LCD}[7]	LCD segment output.
S37	32	-	O	V_{LCD}[7]	LCD segment output.

All information provided in this document is subject to legal disclaimers.
© NXP B.V. 2012. All rights reserved.

Table 163. LPC11D14 pin description table (LQFP100 package) *...continued*

Symbol	Pin	Start logic input	Type	Reset state [1]	Description
S38	33	-	O	V_{LCD}[7]	LCD segment output.
S39	34	-	O	V_{LCD}[7]	LCD segment output.
BP0	42	-	O	V_{LCD}[7]	LCD backplane output.
BP1	44	-	O	V_{LCD}[7]	LCD backplane output.
BP2	43	-	O	V_{LCD}[7]	LCD backplane output.
BP3	45	-	O	V_{LCD}[7]	LCD backplane output.
LCD_SDA	35	-	I/O	[7]	I^2C-bus serial data input/output.
LCD_SCL	36	-	I/O	[7]	I^2C-bus serial clock input.
SYNC	37	-	I/O	[7]	Cascade synchronization input/output.
CLK	38	-	I/O	[7]	External clock input/output.
$V_{DD(LCD)}$	39	-	-	-	1.8 V to 5.5 V power supply: Power supply voltage for the PCF8576D.
$V_{SS(LCD)}$	40	-	-	-	LCD ground.
V_{LCD}	41	-	-	-	LCD power supply; LCD voltage.
n.c.	3	-	-	-	Not connected.

[1] Pin state at reset for default function: I = Input; O = Output; PU = internal pull-up enabled (pins pulled up to full V_{DD} level (V_{DD} = 3.3 V)); IA = inactive, no pull-up/down enabled.

[2] $\overline{\text{RESET}}$ functionality is not available in Deep power-down mode. Use the WAKEUP pin to reset the chip and wake up from Deep power-down mode. An external pull-up resistor is required on this pin for the Deep power-down mode.

[3] 5 V tolerant pad providing digital I/O functions with configurable pull-up/pull-down resistors and configurable hysteresis.

[4] I^2C-bus pads compliant with the I^2C-bus specification for I^2C standard mode and I^2C Fast-mode Plus.

[5] 5 V tolerant pad providing digital I/O functions with configurable pull-up/pull-down resistors, configurable hysteresis, and analog input. When configured as a ADC input, digital section of the pad is disabled and the pin is not 5 V tolerant.

[6] When the system oscillator is not used, connect XTALIN and XTALOUT as follows: XTALIN can be left floating or can be grounded (grounding is preferred to reduce susceptibility to noise). XTALOUT should be left floating.

[7] See the *LPC11D4 data sheet*.

All information provided in this document is subject to legal disclaimers. © NXP B.V. 2012. All rights reserved.

10.1 How to read this chapter

This chapter describes the small pin packages for the LPC111x parts in TSSOP, DIP, and SO packages.

Table 164. LPC11xx pin configurations for 20-pin and 28-pin packages

Part		SO20	TSSOP20	TSSOP28	DIP28
LPC1110FD20	Pin configuration	Figure 22	-	-	-
	Pin description	Table 165	-	-	-
LPC1111FDH20/002	Pin configuration	-	Figure 23	-	-
	Pin description	-	Table 165	-	-
LPC1112FD20/102	Pin configuration	Figure 22	-	-	-
	Pin description	Table 165	-	-	-
LPC1112FDH20/102	Pin configuration	-	Figure 24	-	-
	Pin description	-	Table 166	-	-
LPC1112FDH28/102	Pin configuration	-	-	Figure 25	-
	Pin description	-	-	Table 167	-
LPC1114FDH28/102	Pin configuration	-	-	Figure 25	-
	Pin description	-	-	Table 167	-
LPC1114FN28/102	Pin configuration	-	-	-	Figure 26
	Pin description	-	-	-	Table 167

10.2 Pin configuration (LPC1110/11/12)

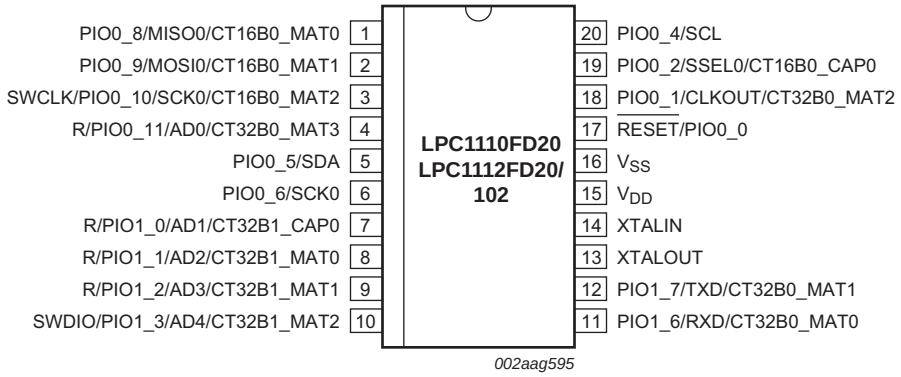

Fig 22. Pin configuration SO20 package

© NXP B.V. 2012. All rights reserved.

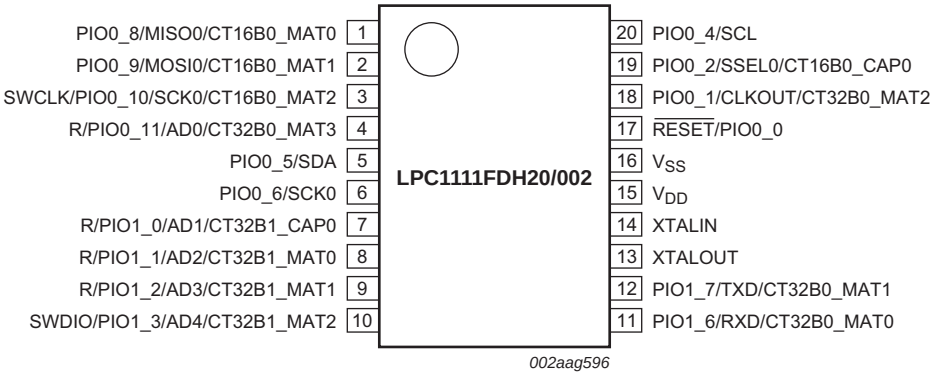

Fig 23. Pin configuration TSSOP20 package with I²C-bus pins

Table 165. LPC1110/11/12 pin description table (SO20 and TSSOP20 package with I²C-bus pins)

Symbol	Pin SO20/ TSSOP20		Start logic input	Type	Reset state [1]	Description
PIO0_0 to PIO0_11				I/O		**Port 0 —** Port 0 is a 12-bit I/O port with individual direction and function controls for each bit. The operation of port 0 pins depends on the function selected through the IOCONFIG register block.
$\overline{\text{RESET}}$/PIO0_0	17	[2]	yes	I	I; PU	**$\overline{\text{RESET}}$ —** External reset input with 20 ns glitch filter. A LOW-going pulse as short as 50 ns on this pin resets the device, causing I/O ports and peripherals to take on their default states, and processor execution to begin at address 0.
				I/O	-	**PIO0_0 —** General purpose digital input/output pin with 10 ns glitch filter.
PIO0_1/CLKOUT/ CT32B0_MAT2	18	[3]	yes	I/O	I; PU	**PIO0_1 —** General purpose digital input/output pin. A LOW level on this pin during reset starts the ISP command handler.
				O	-	**CLKOUT —** Clockout pin.
				O	-	**CT32B0_MAT2 —** Match output 2 for 32-bit timer 0.
PIO0_2/SSEL0/ CT16B0_CAP0	19	[3]	yes	I/O	I; PU	**PIO0_2 —** General purpose digital input/output pin.
				I/O	-	**SSEL0 —** Slave Select for SPI0.
				I	-	**CT16B0_CAP0 —** Capture input 0 for 16-bit timer 0.
PIO0_4/SCL	20	[4]	yes	I/O	I; IA	**PIO0_4 —** General purpose digital input/output pin (open-drain).
				I/O	-	**SCL —** I²C-bus, open-drain clock input/output. High-current sink only if I²C Fast-mode Plus is selected in the I/O configuration register.
PIO0_5/SDA	5	[4]	yes	I/O	I; IA	**PIO0_5 —** General purpose digital input/output pin (open-drain).
				I/O	-	**SDA —** I²C-bus, open-drain data input/output. High-current sink only if I²C Fast-mode Plus is selected in the I/O configuration register.
PIO0_6/SCK0	6	[3]	yes	I/O	I; PU	**PIO0_6 —** General purpose digital input/output pin.
				I/O	-	**SCK0 —** Serial clock for SPI0.
PIO0_8/MISO0/ CT16B0_MAT0	1	[3]	yes	I/O	I; PU	**PIO0_8 —** General purpose digital input/output pin.
				I/O	-	**MISO0 —** Master In Slave Out for SPI0.
				O	-	**CT16B0_MAT0 —** Match output 0 for 16-bit timer 0.

All information provided in this document is subject to legal disclaimers.

© NXP B.V. 2012. All rights reserved.

Table 165. LPC1110/11/12 pin description table (SO20 and TSSOP20 package with I²C-bus pins) *...continued*

Symbol	Pin SO20/ TSSOP20		Start logic input	Type	Reset state [1]	Description
PIO0_9/MOSI0/ CT16B0_MAT1	2	[3]	yes	I/O	I; PU	**PIO0_9 —** General purpose digital input/output pin.
				I/O	-	**MOSI0 —** Master Out Slave In for SPI0.
				O	-	**CT16B0_MAT1 —** Match output 1 for 16-bit timer 0.
SWCLK/PIO0_10/ SCK0/ CT16B0_MAT2	3	[3]	yes	I	I; PU	**SWCLK —** Serial wire clock.
				I/O	-	**PIO0_10 —** General purpose digital input/output pin.
				I/O	-	**SCK0 —** Serial clock for SPI0.
				O	-	**CT16B0_MAT2 —** Match output 2 for 16-bit timer 0.
R/PIO0_11/ AD0/CT32B0_MAT3	4	[5]	yes	I	I; PU	**R —** Reserved. Configure for an alternate function in the IOCONFIG block.
				I/O	-	**PIO0_11 —** General purpose digital input/output pin.
				I	-	**AD0 —** A/D converter, input 0.
				O	-	**CT32B0_MAT3 —** Match output 3 for 32-bit timer 0.
PIO1_0 to PIO1_7				I/O		**Port 1 —** Port 1 is a 12-bit I/O port with individual direction and function controls for each bit. The operation of port 1 pins depends on the function selected through the IOCONFIG register block.
R/PIO1_0/ AD1/CT32B1_CAP0	7	[5]	yes	I	I; PU	**R —** Reserved. Configure for an alternate function in the IOCONFIG block.
				I/O	-	**PIO1_0 —** General purpose digital input/output pin.
				I	-	**AD1 —** A/D converter, input 1.
				I	-	**CT32B1_CAP0 —** Capture input 0 for 32-bit timer 1.
R/PIO1_1/ AD2/CT32B1_MAT0	8	[5]	no	O	I; PU	**R —** Reserved. Configure for an alternate function in the IOCONFIG block.
				I/O	-	**PIO1_1 —** General purpose digital input/output pin.
				I	-	**AD2 —** A/D converter, input 2.
				O	-	**CT32B1_MAT0 —** Match output 0 for 32-bit timer 1.
R/PIO1_2/ AD3/CT32B1_MAT1	9	[5]	no	I	I; PU	**R —** Reserved. Configure for an alternate function in the IOCONFIG block.
				I/O	-	**PIO1_2 —** General purpose digital input/output pin.
				I	-	**AD3 —** A/D converter, input 3.
				O	-	**CT32B1_MAT1 —** Match output 1 for 32-bit timer 1.
SWDIO/PIO1_3/ AD4/CT32B1_MAT2	10	[5]	no	I/O	I; PU	**SWDIO —** Serial wire debug input/output.
				I/O	-	**PIO1_3 —** General purpose digital input/output pin.
				I	-	**AD4 —** A/D converter, input 4.
				O	-	**CT32B1_MAT2 —** Match output 2 for 32-bit timer 1.
PIO1_6/RXD/ CT32B0_MAT0	11	[3]	no	I/O	I; PU	**PIO1_6 —** General purpose digital input/output pin.
				I	-	**RXD —** Receiver input for UART.
				O	-	**CT32B0_MAT0 —** Match output 0 for 32-bit timer 0.
PIO1_7/TXD/ CT32B0_MAT1	12	[3]	no	I/O	I; PU	**PIO1_7 —** General purpose digital input/output pin.
				O	-	**TXD —** Transmitter output for UART.
				O	-	**CT32B0_MAT1 —** Match output 1 for 32-bit timer 0.

All information provided in this document is subject to legal disclaimers.

© NXP B.V. 2012. All rights reserved.

Table 165. LPC1110/11/12 pin description table (SO20 and TSSOP20 package with I²C-bus pins) *...continued*

Symbol	Pin SO20/ TSSOP20		Start logic input	Type	Reset state [1]	Description
V_{DD}	15		-		-	3.3 V supply voltage to the internal regulator, the external rail, and the ADC. Also used as the ADC reference voltage.
XTALIN	14	[6]	-	I	-	Input to the oscillator circuit and internal clock generator circuits. Input voltage must not exceed 1.8 V.
XTALOUT	13	[6]	-	O	-	Output from the oscillator amplifier.
V_{SS}	16		-		-	Ground.

[1] Pin state at reset for default function: I = Input; O = Output; PU = internal pull-up enabled (pins pulled up to full V_{DD} level); IA = inactive, no pull-up/down enabled.

[2] $\overline{\text{RESET}}$ functionality is not available in Deep power-down mode. Use the WAKEUP pin to reset the chip and wake up from Deep power-down mode. An external pull-up resistor is required on this pin for the Deep power-down mode.

[3] 5 V tolerant pad providing digital I/O functions with configurable pull-up/pull-down resistors and configurable hysteresis.

[4] I²C-bus pads compliant with the I²C-bus specification for I²C standard mode and I²C Fast-mode Plus.

[5] 5 V tolerant pad providing digital I/O functions with configurable pull-up/pull-down resistors, configurable hysteresis, and analog input. When configured as a ADC input, digital section of the pad is disabled and the pin is not 5 V tolerant .

[6] When the system oscillator is not used, connect XTALIN and XTALOUT as follows: XTALIN can be left floating or can be grounded (grounding is preferred to reduce susceptibility to noise). XTALOUT should be left floating.

10.3 Pin configuration (LPC1112)

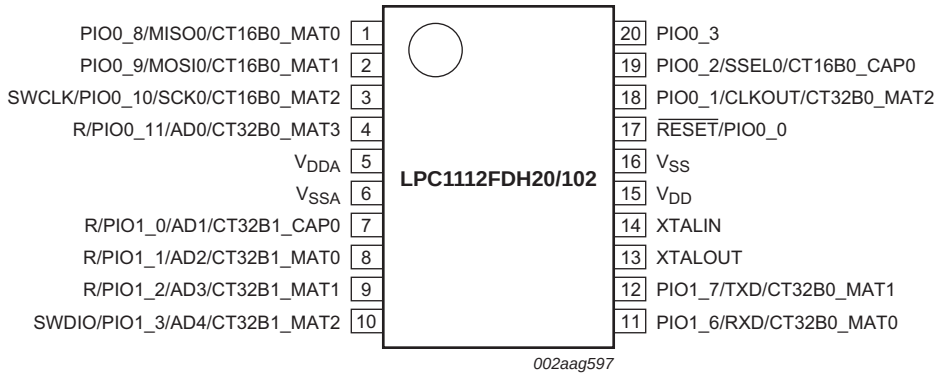

Fig 24. Pin configuration TSSOP20 package with V_{DDA} and V_{SSA} pins

All information provided in this document is subject to legal disclaimers.

© NXP B.V. 2012. All rights reserved.

Table 166. LPC1112 pin description table (TSSOP20 with V_{DDA} and V_{SSA} pins)

Symbol	Pin TSSOP20		Start logic input	Type	Reset state [1]	Description
PIO0_0 to PIO0_11				I/O		**Port 0 —** Port 0 is a 12-bit I/O port with individual direction and function controls for each bit. The operation of port 0 pins depends on the function selected through the IOCONFIG register block.
$\overline{\text{RESET}}$/PIO0_0	17	[2]	yes	I	I; PU	**$\overline{\text{RESET}}$ —** External reset input with 20 ns glitch filter. A LOW-going pulse as short as 50 ns on this pin resets the device, causing I/O ports and peripherals to take on their default states, and processor execution to begin at address 0.
				I/O	-	**PIO0_0 —** General purpose digital input/output pin with 10 ns glitch filter.
PIO0_1/CLKOUT/ CT32B0_MAT2	18	[3]	yes	I/O	I; PU	**PIO0_1 —** General purpose digital input/output pin. A LOW level on this pin during reset starts the ISP command handler.
				O	-	**CLKOUT —** Clockout pin.
				O	-	**CT32B0_MAT2 —** Match output 2 for 32-bit timer 0.
PIO0_2/SSEL0/ CT16B0_CAP0	19	[3]	yes	I/O	I; PU	**PIO0_2 —** General purpose digital input/output pin.
				I/O	-	**SSEL0 —** Slave Select for SPI0.
				I	-	**CT16B0_CAP0 —** Capture input 0 for 16-bit timer 0.
PIO0_3	20	[3]	yes	I/O	I; PU	**PIO0_3 —** General purpose digital input/output pin.
PIO0_8/MISO0/ CT16B0_MAT0	1	[3]	yes	I/O	I; PU	**PIO0_8 —** General purpose digital input/output pin.
				I/O	-	**MISO0 —** Master In Slave Out for SPI0.
				O	-	**CT16B0_MAT0 —** Match output 0 for 16-bit timer 0.
PIO0_9/MOSI0/ CT16B0_MAT1	2	[3]	yes	I/O	I; PU	**PIO0_9 —** General purpose digital input/output pin.
				I/O	-	**MOSI0 —** Master Out Slave In for SPI0.
				O	-	**CT16B0_MAT1 —** Match output 1 for 16-bit timer 0.
SWCLK/PIO0_10/ SCK0/ CT16B0_MAT2	3	[3]	yes	I	I; PU	**SWCLK —** Serial wire clock.
				I/O	-	**PIO0_10 —** General purpose digital input/output pin.
				I/O	-	**SCK0 —** Serial clock for SPI0.
				O	-	**CT16B0_MAT2 —** Match output 2 for 16-bit timer 0.
R/PIO0_11/ AD0/CT32B0_MAT3	4	[4]	yes	I	I; PU	**R —** Reserved. Configure for an alternate function in the IOCONFIG block.
				I/O	-	**PIO0_11 —** General purpose digital input/output pin.
				I	-	**AD0 —** A/D converter, input 0.
				O	-	**CT32B0_MAT3 —** Match output 3 for 32-bit timer 0.
PIO1_0 to PIO1_7				I/O		**Port 1 —** Port 1 is a 12-bit I/O port with individual direction and function controls for each bit. The operation of port 1 pins depends on the function selected through the IOCONFIG register block.

All information provided in this document is subject to legal disclaimers.

© NXP B.V. 2012. All rights reserved.

Table 166. LPC1112 pin description table (TSSOP20 with V_{DDA} and V_{SSA} pins) *...continued*

Symbol	Pin TSSOP20		Start logic input	Type	Reset state [1]	Description
R/PIO1_0/ AD1/CT32B1_CAP0	7	[4]	yes	I	I; PU	**R —** Reserved. Configure for an alternate function in the IOCONFIG block.
				I/O	-	**PIO1_0 —** General purpose digital input/output pin.
				I	-	**AD1 —** A/D converter, input 1.
				I	-	**CT32B1_CAP0 —** Capture input 0 for 32-bit timer 1.
R/PIO1_1/ AD2/CT32B1_MAT0	8	[4]	no	O	I; PU	**R —** Reserved. Configure for an alternate function in the IOCONFIG block.
				I/O	-	**PIO1_1 —** General purpose digital input/output pin.
				I	-	**AD2 —** A/D converter, input 2.
				O	-	**CT32B1_MAT0 —** Match output 0 for 32-bit timer 1.
R/PIO1_2/ AD3/CT32B1_MAT1	9	[4]	no	I	I; PU	**R —** Reserved. Configure for an alternate function in the IOCONFIG block.
				I/O	-	**PIO1_2 —** General purpose digital input/output pin.
				I	-	**AD3 —** A/D converter, input 3.
				O	-	**CT32B1_MAT1 —** Match output 1 for 32-bit timer 1.
SWDIO/PIO1_3/ AD4/CT32B1_MAT2	10	[4]	no	I/O	I; PU	**SWDIO —** Serial wire debug input/output.
				I/O	-	**PIO1_3 —** General purpose digital input/output pin.
				I	-	**AD4 —** A/D converter, input 4.
				O	-	**CT32B1_MAT2 —** Match output 2 for 32-bit timer 1.
PIO1_6/RXD/ CT32B0_MAT0	11	[3]	no	I/O	I; PU	**PIO1_6 —** General purpose digital input/output pin.
				I	-	**RXD —** Receiver input for UART.
				O	-	**CT32B0_MAT0 —** Match output 0 for 32-bit timer 0.
PIO1_7/TXD/ CT32B0_MAT1	12	[3]	no	I/O	I; PU	**PIO1_7 —** General purpose digital input/output pin.
				O	-	**TXD —** Transmitter output for UART.
				O	-	**CT32B0_MAT1 —** Match output 1 for 32-bit timer 0.
V_{DD}	15		-	I	-	3.3 V supply voltage to the internal regulator and the external rail.
V_{DDA}	5		-	I	-	3.3 V supply voltage to the ADC. Also used as the ADC reference voltage.
XTALIN	14	[5]	-	I	-	Input to the oscillator circuit and internal clock generator circuits. Input voltage must not exceed 1.8 V.
XTALOUT	13	[5]	-	O	-	Output from the oscillator amplifier.
V_{SS}	16		-	I	-	Ground.
V_{SSA}	6		-	I	-	Analog ground.

[1] Pin state at reset for default function: I = Input; O = Output; PU = internal pull-up enabled (pins pulled up to full V_{DD} level); IA = inactive, no pull-up/down enabled.

[2] $\overline{\text{RESET}}$ functionality is not available in Deep power-down mode. Use the WAKEUP pin to reset the chip and wake up from Deep power-down mode. An external pull-up resistor is required on this pin for the Deep power-down mode.

[3] 5 V tolerant pad providing digital I/O functions with configurable pull-up/pull-down resistors and configurable hysteresis.

All information provided in this document is subject to legal disclaimers.

© NXP B.V. 2012. All rights reserved.

[4] 5 V tolerant pad providing digital I/O functions with configurable pull-up/pull-down resistors, configurable hysteresis, and analog input. When configured as a ADC input, digital section of the pad is disabled and the pin is not 5 V tolerant.

[5] When the system oscillator is not used, connect XTALIN and XTALOUT as follows: XTALIN can be left floating or can be grounded (grounding is preferred to reduce susceptibility to noise). XTALOUT should be left floating.

10.4 Pin configuration (LPC1112/14)

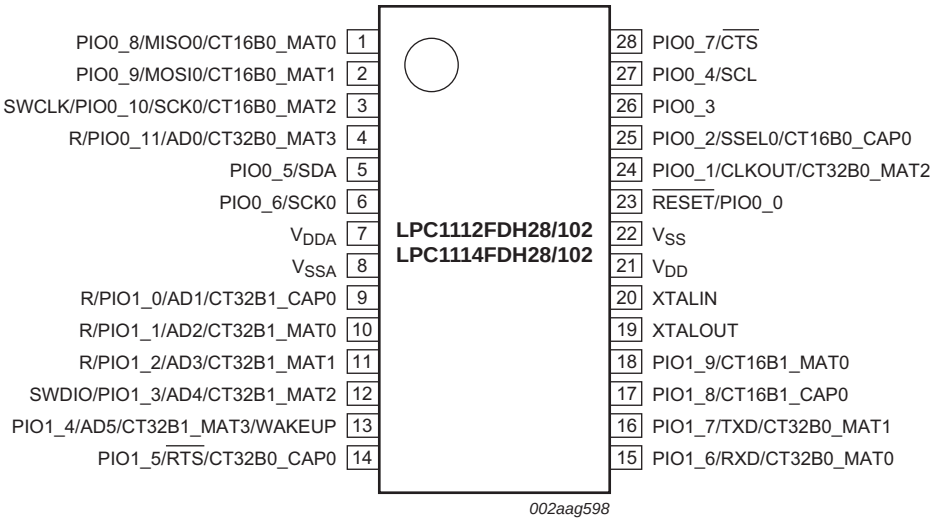

Fig 25. Pin configuration TSSOP28 package

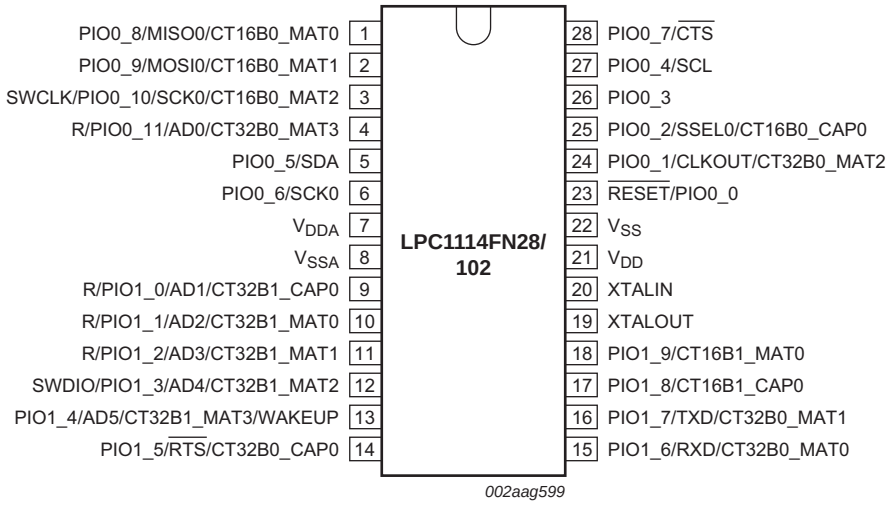

Fig 26. Pin configuration DIP28 package

All information provided in this document is subject to legal disclaimers.

© NXP B.V. 2012. All rights reserved.

Table 167. LPC1112/14 pin description table (TSSOP28 and DIP28 packages)

Symbol	Pin TSSOP28/ DIP28		Start logic input	Type	Reset state [1]	Description
PIO0_0 to PIO0_11				I/O		**Port 0 —** Port 0 is a 12-bit I/O port with individual direction and function controls for each bit. The operation of port 0 pins depends on the function selected through the IOCONFIG register block.
$\overline{\text{RESET}}$/PIO0_0	23	[2]	yes	I	I; PU	**$\overline{\text{RESET}}$ —** External reset input with 20 ns glitch filter. A LOW-going pulse as short as 50 ns on this pin resets the device, causing I/O ports and peripherals to take on their default states, and processor execution to begin at address 0.
				I/O	-	**PIO0_0 —** General purpose digital input/output pin with 10 ns glitch filter.
PIO0_1/CLKOUT/ CT32B0_MAT2	24	[3]	yes	I/O	I; PU	**PIO0_1 —** General purpose digital input/output pin. A LOW level on this pin during reset starts the ISP command handler.
				O	-	**CLKOUT —** Clockout pin.
				O	-	**CT32B0_MAT2 —** Match output 2 for 32-bit timer 0.
PIO0_2/SSEL0/ CT16B0_CAP0	25	[3]	yes	I/O	I; PU	**PIO0_2 —** General purpose digital input/output pin.
				I/O	-	**SSEL0 —** Slave Select for SPI0.
				I	-	**CT16B0_CAP0 —** Capture input 0 for 16-bit timer 0.
PIO0_3	26	[3]	yes	I/O	I; PU	**PIO0_3 —** General purpose digital input/output pin.
PIO0_4/SCL	27	[4]	yes	I/O	I; IA	**PIO0_4 —** General purpose digital input/output pin (open-drain).
				I/O	-	**SCL —** I^2C-bus, open-drain clock input/output. High-current sink only if I^2C Fast-mode Plus is selected in the I/O configuration register.
PIO0_5/SDA	5	[4]	yes	I/O	I; IA	**PIO0_5 —** General purpose digital input/output pin (open-drain).
				I/O	-	**SDA —** I^2C-bus, open-drain data input/output. High-current sink only if I^2C Fast-mode Plus is selected in the I/O configuration register.
PIO0_6/SCK0	6	[3]	yes	I/O	I; PU	**PIO0_6 —** General purpose digital input/output pin.
				I/O	-	**SCK0 —** Serial clock for SPI0.
PIO0_7/$\overline{\text{CTS}}$	28	[3]	yes	I/O	I; PU	**PIO0_7 —** General purpose digital input/output pin (high-current output driver).
				I	-	**$\overline{\text{CTS}}$ —** Clear To Send input for UART.
PIO0_8/MISO0/ CT16B0_MAT0	1	[3]	yes	I/O	I; PU	**PIO0_8 —** General purpose digital input/output pin.
				I/O	-	**MISO0 —** Master In Slave Out for SPI0.
				O	-	**CT16B0_MAT0 —** Match output 0 for 16-bit timer 0.
PIO0_9/MOSI0/ CT16B0_MAT1	2	[3]	yes	I/O	I; PU	**PIO0_9 —** General purpose digital input/output pin.
				I/O	-	**MOSI0 —** Master Out Slave In for SPI0.
				O	-	**CT16B0_MAT1 —** Match output 1 for 16-bit timer 0.
SWCLK/PIO0_10/ SCK0/ CT16B0_MAT2	3	[3]	yes	I	I; PU	**SWCLK —** Serial wire clock.
				I/O	-	**PIO0_10 —** General purpose digital input/output pin.
				I/O	-	**SCK0 —** Serial clock for SPI0.
				O	-	**CT16B0_MAT2 —** Match output 2 for 16-bit timer 0.

All information provided in this document is subject to legal disclaimers.

© NXP B.V. 2012. All rights reserved.

Table 167. LPC1112/14 pin description table (TSSOP28 and DIP28 packages) *...continued*

Symbol	Pin TSSOP28/ DIP28		Start logic input	Type	Reset state [1]	Description
R/PIO0_11/ AD0/CT32B0_MAT3	4	[5]	yes	I	I; PU	**R —** Reserved. Configure for an alternate function in the IOCONFIG block.
				I/O	-	**PIO0_11 —** General purpose digital input/output pin.
				I	-	**AD0 —** A/D converter, input 0.
				O	-	**CT32B0_MAT3 —** Match output 3 for 32-bit timer 0.
PIO1_0 to PIO1_9				I/O		**Port 1 —** Port 1 is a 12-bit I/O port with individual direction and function controls for each bit. The operation of port 1 pins depends on the function selected through the IOCONFIG register block.
R/PIO1_0/ AD1/CT32B1_CAP0	9	[5]	yes	I	I; PU	**R —** Reserved. Configure for an alternate function in the IOCONFIG block.
				I/O	-	**PIO1_0 —** General purpose digital input/output pin.
				I	-	**AD1 —** A/D converter, input 1.
				I	-	**CT32B1_CAP0 —** Capture input 0 for 32-bit timer 1.
R/PIO1_1/ AD2/CT32B1_MAT0	10	[5]	no	O	I; PU	**R —** Reserved. Configure for an alternate function in the IOCONFIG block.
				I/O	-	**PIO1_1 —** General purpose digital input/output pin.
				I	-	**AD2 —** A/D converter, input 2.
				O	-	**CT32B1_MAT0 —** Match output 0 for 32-bit timer 1.
R/PIO1_2/ AD3/CT32B1_MAT1	11	[5]	no	I	I; PU	**R —** Reserved. Configure for an alternate function in the IOCONFIG block.
				I/O	-	**PIO1_2 —** General purpose digital input/output pin.
				I	-	**AD3 —** A/D converter, input 3.
				O	-	**CT32B1_MAT1 —** Match output 1 for 32-bit timer 1.
SWDIO/PIO1_3/ AD4/CT32B1_MAT2	12	[5]	no	I/O	I; PU	**SWDIO —** Serial wire debug input/output.
				I/O	-	**PIO1_3 —** General purpose digital input/output pin.
				I	-	**AD4 —** A/D converter, input 4.
				O	-	**CT32B1_MAT2 —** Match output 2 for 32-bit timer 1.
PIO1_4/AD5/ CT32B1_MAT3/ WAKEUP	13	[5]	no	I/O	I; PU	**PIO1_4 —** General purpose digital input/output pin with 10 ns glitch filter.
				I	-	**AD5 —** A/D converter, input 5.
				O	-	**CT32B1_MAT3 —** Match output 3 for 32-bit timer 1.
				I	-	**WAKEUP —** Deep power-down mode wake-up pin with 20 ns glitch filter. This pin must be pulled HIGH externally to enter Deep power-down mode and pulled LOW to exit Deep power-down mode. A LOW-going pulse as short as 50 ns wakes up the part.
PIO1_5/$\overline{\text{RTS}}$/ CT32B0_CAP0	14	[3]	no	I/O	I; PU	**PIO1_5 —** General purpose digital input/output pin.
				O	-	**$\overline{\text{RTS}}$ —** Request To Send output for UART.
				I	-	**CT32B0_CAP0 —** Capture input 0 for 32-bit timer 0.

All information provided in this document is subject to legal disclaimers.

© NXP B.V. 2012. All rights reserved.

Table 167. LPC1112/14 pin description table (TSSOP28 and DIP28 packages) *...continued*

Symbol	Pin TSSOP28/ DIP28		Start logic input	Type	Reset state [1]	Description
PIO1_6/RXD/ CT32B0_MAT0	15	[3]	no	I/O	I; PU	**PIO1_6 —** General purpose digital input/output pin.
				I	-	**RXD —** Receiver input for UART.
				O	-	**CT32B0_MAT0 —** Match output 0 for 32-bit timer 0.
PIO1_7/TXD/ CT32B0_MAT1	16	[3]	no	I/O	I; PU	**PIO1_7 —** General purpose digital input/output pin.
				O	-	**TXD —** Transmitter output for UART.
				O	-	**CT32B0_MAT1 —** Match output 1 for 32-bit timer 0.
PIO1_8/ CT16B1_CAP0	17	[3]	no	I/O	I; PU	**PIO1_8 —** General purpose digital input/output pin.
				I	-	**CT16B1_CAP0 —** Capture input 0 for 16-bit timer 1.
PIO1_9/ CT16B1_MAT0	18	[3]	no	I/O	I; PU	**PIO1_9 —** General purpose digital input/output pin.
				O	-	**CT16B1_MAT0 —** Match output 0 for 16-bit timer 1.
V_{DD}	21		-		-	3.3 V supply voltage to the internal regulator and the external rail.
V_{DDA}	7		-	-	-	3.3 V supply voltage to the ADC. Also used as the ADC reference voltage.
XTALIN	20	[6]	-	I	-	Input to the oscillator circuit and internal clock generator circuits. Input voltage must not exceed 1.8 V.
XTALOUT	19	[6]	-	O	-	Output from the oscillator amplifier.
V_{SS}	22		-		-	Ground.
V_{SSA}	8		-	-	-	Analog ground.

[1] Pin state at reset for default function: I = Input; O = Output; PU = internal pull-up enabled (pins pulled up to full V_{DD} level); IA = inactive, no pull-up/down enabled.

[2] $\overline{\text{RESET}}$ functionality is not available in Deep power-down mode. Use the WAKEUP pin to reset the chip and wake up from Deep power-down mode. An external pull-up resistor is required on this pin for the Deep power-down mode.

[3] 5 V tolerant pad providing digital I/O functions with configurable pull-up/pull-down resistors and configurable hysteresis.

[4] I^2C-bus pads compliant with the I^2C-bus specification for I^2C standard mode and I^2C Fast-mode Plus.

[5] 5 V tolerant pad providing digital I/O functions with configurable pull-up/pull-down resistors, configurable hysteresis, and analog input. When configured as a ADC input, digital section of the pad is disabled and the pin is not 5 V tolerant.

[6] When the system oscillator is not used, connect XTALIN and XTALOUT as follows: XTALIN can be left floating or can be grounded (grounding is preferred to reduce susceptibility to noise). XTALOUT should be left floating.

All information provided in this document is subject to legal disclaimers.

© NXP B.V. 2012. All rights reserved.

11.1 How to read this chapter

Remark: This chapter applies to parts in the LPC1100XL series for LQFP and HVQFN packages.

The LPC111x are available in three packages: LQFP48 (LPC1113, LPC1114), and HVQFN33 (LPC1111, LPC1112, LPC1113, LPC1114).

Table 168. LPC1100XL pin configurations

Part		LQFP48	HVQFN33
LPC1111	Pin configuration	-	Figure 28
	Pin description	-	Table 170
LPC1112	Pin configuration	-	Figure 28
	Pin description	-	Table 170
LPC1113	Pin configuration	Figure 27	Figure 28
	Pin description	Table 169	Table 170
LPC1114	Pin configuration	Figure 27	Figure 28
	Pin description	Table 169	Table 170
LPC1115	Pin configuration	Figure 27	Figure 28
	Pin description	Table 169	Table 170

All information provided in this document is subject to legal disclaimers.

© NXP B.V. 2012. All rights reserved.

11.2 LPC111x Pin configuration

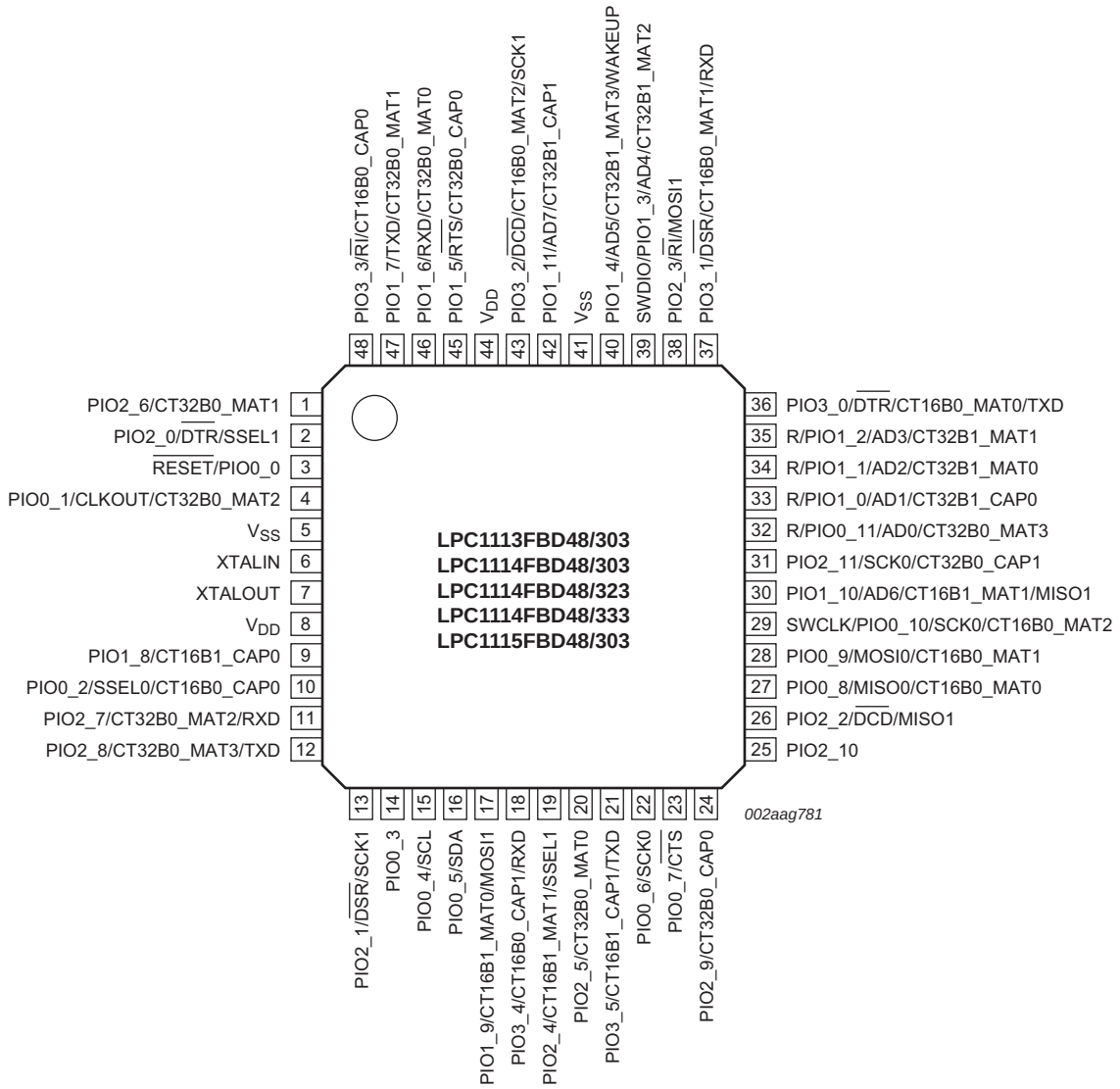

Fig 27. Pin configuration LQFP48 package

All information provided in this document is subject to legal disclaimers.

© NXP B.V. 2012. All rights reserved.

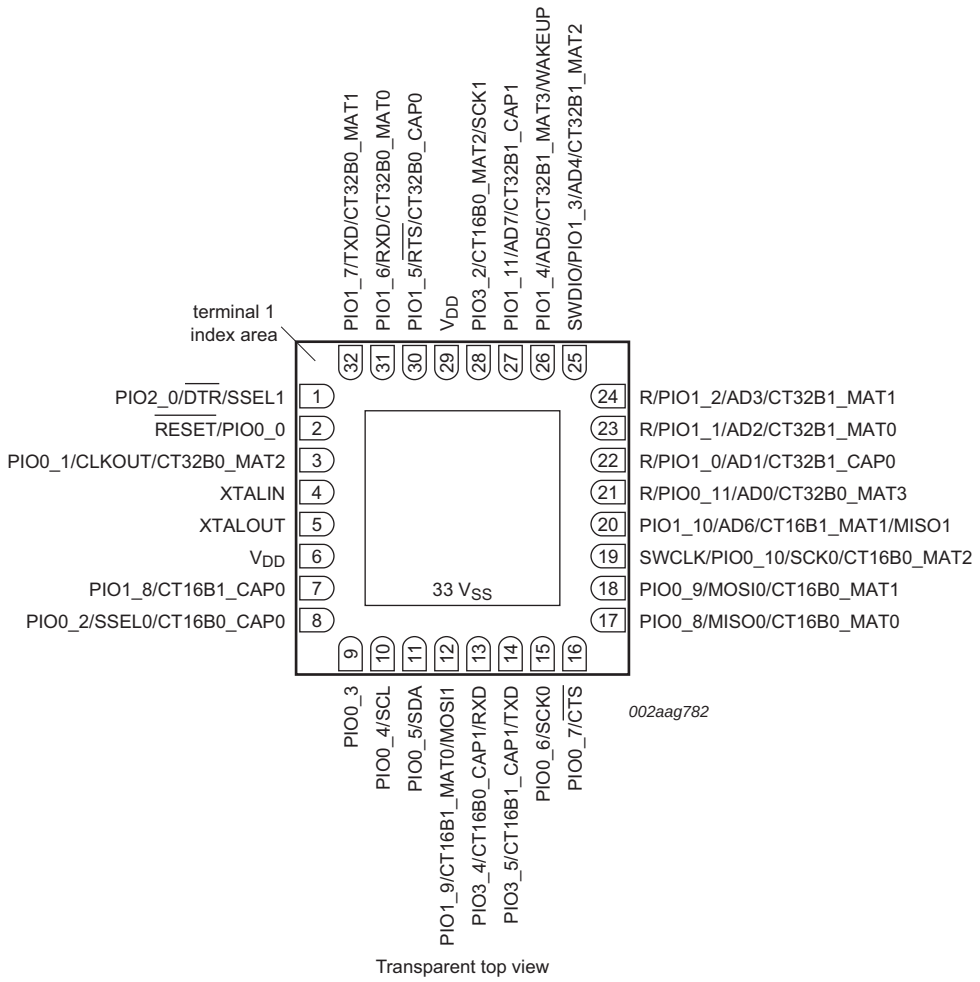

Fig 28. Pin configuration HVQFN33 package

11.3 LPC1100XL Pin description

Table 169. LPC1113/14/15XL pin description table (LQFP48 package)

Symbol	Pin	Start logic input	Type	Reset state [1]	Description
PIO0_0 to PIO0_11			I/O		**Port 0 —** Port 0 is a 12-bit I/O port with individual direction and function controls for each bit. The operation of port 0 pins depends on the function selected through the IOCONFIG register block.
RESET/PIO0_0	3[2]	yes	I	I; PU	**RESET —** External reset input with 20 ns glitch filter. A LOW-going pulse as short as 50 ns on this pin resets the device, causing I/O ports and peripherals to take on their default states, and processor execution to begin at address 0.
			I/O	-	**PIO0_0 —** General purpose digital input/output pin with 10 ns glitch filter.

All information provided in this document is subject to legal disclaimers.

© NXP B.V. 2012. All rights reserved.

Table 169. LPC1113/14/15XL pin description table (LQFP48 package) *…continued*

Symbol	Pin	Start logic input	Type	Reset state [1]	Description
PIO0_1/CLKOUT/ CT32B0_MAT2	4[3]	yes	I/O	I; PU	**PIO0_1 —** General purpose digital input/output pin. A LOW level on this pin during reset starts the ISP command handler.
			O	-	**CLKOUT —** Clockout pin.
			O	-	**CT32B0_MAT2 —** Match output 2 for 32-bit timer 0.
PIO0_2/SSEL0/ CT16B0_CAP0	10[3]	yes	I/O	I; PU	**PIO0_2 —** General purpose digital input/output pin.
			I/O	-	**SSEL0 —** Slave Select for SPI0.
			I	-	**CT16B0_CAP0 —** Capture input 0 for 16-bit timer 0.
PIO0_3	14[3]	yes	I/O	I; PU	**PIO0_3 —** General purpose digital input/output pin.
PIO0_4/SCL	15[4]	yes	I/O	I; IA	**PIO0_4 —** General purpose digital input/output pin (open-drain).
			I/O	-	**SCL —** I^2C-bus, open-drain clock input/output. High-current sink only if I^2C Fast-mode Plus is selected in the I/O configuration register.
PIO0_5/SDA	16[4]	yes	I/O	I; IA	**PIO0_5 —** General purpose digital input/output pin (open-drain).
			I/O	-	**SDA —** I^2C-bus, open-drain data input/output. High-current sink only if I^2C Fast-mode Plus is selected in the I/O configuration register.
PIO0_6/SCK0	22[3]	yes	I/O	I; PU	**PIO0_6 —** General purpose digital input/output pin.
			I/O	-	**SCK0 —** Serial clock for SPI0.
PIO0_7/$\overline{\text{CTS}}$	23[3]	yes	I/O	I; PU	**PIO0_7 —** General purpose digital input/output pin (high-current output driver).
			I	-	**$\overline{\text{CTS}}$ —** Clear To Send input for UART.
PIO0_8/MISO0/ CT16B0_MAT0	27[3]	yes	I/O	I; PU	**PIO0_8 —** General purpose digital input/output pin.
			I/O	-	**MISO0 —** Master In Slave Out for SPI0.
			O	-	**CT16B0_MAT0 —** Match output 0 for 16-bit timer 0.
PIO0_9/MOSI0/ CT16B0_MAT1	28[3]	yes	I/O	I; PU	**PIO0_9 —** General purpose digital input/output pin.
			I/O	-	**MOSI0 —** Master Out Slave In for SPI0.
			O	-	**CT16B0_MAT1 —** Match output 1 for 16-bit timer 0.
SWCLK/PIO0_10/ SCK0/ CT16B0_MAT2	29[3]	yes	I	I; PU	**SWCLK —** Serial wire clock.
			I/O	-	**PIO0_10 —** General purpose digital input/output pin.
			I/O	-	**SCK0 —** Serial clock for SPI0.
			O	-	**CT16B0_MAT2 —** Match output 2 for 16-bit timer 0.
R/PIO0_11/ AD0/CT32B0_MAT3	32[5]	yes	I	I; PU	**R —** Reserved. Configure for an alternate function in the IOCONFIG block.
			I/O	-	**PIO0_11 —** General purpose digital input/output pin.
			I	-	**AD0 —** A/D converter, input 0.
			O	-	**CT32B0_MAT3 —** Match output 3 for 32-bit timer 0.
PIO1_0 to PIO1_11			I/O		**Port 1 —** Port 1 is a 12-bit I/O port with individual direction and function controls for each bit. The operation of port 1 pins depends on the function selected through the IOCONFIG register block.

All information provided in this document is subject to legal disclaimers.

© NXP B.V. 2012. All rights reserved.

Table 169. LPC1113/14/15XL pin description table (LQFP48 package) *…continued*

Symbol	Pin	Start logic input	Type	Reset state [1]	Description
R/PIO1_0/ AD1/CT32B1_CAP0	33[5]	yes	I	I; PU	**R —** Reserved. Configure for an alternate function in the IOCONFIG block.
			I/O	-	**PIO1_0 —** General purpose digital input/output pin.
			I	-	**AD1 —** A/D converter, input 1.
			I	-	**CT32B1_CAP0 —** Capture input 0 for 32-bit timer 1.
R/PIO1_1/ AD2/CT32B1_MAT0	34[5]	no	O	I; PU	**R —** Reserved. Configure for an alternate function in the IOCONFIG block.
			I/O	-	**PIO1_1 —** General purpose digital input/output pin.
			I	-	**AD2 —** A/D converter, input 2.
			O	-	**CT32B1_MAT0 —** Match output 0 for 32-bit timer 1.
R/PIO1_2/ AD3/CT32B1_MAT1	35[5]	no	I	I; PU	**R —** Reserved. Configure for an alternate function in the IOCONFIG block.
			I/O	-	**PIO1_2 —** General purpose digital input/output pin.
			I	-	**AD3 —** A/D converter, input 3.
			O	-	**CT32B1_MAT1 —** Match output 1 for 32-bit timer 1.
SWDIO/PIO1_3/ AD4/CT32B1_MAT2	39[5]	no	I/O	I; PU	**SWDIO —** Serial wire debug input/output.
			I/O	-	**PIO1_3 —** General purpose digital input/output pin.
			I	-	**AD4 —** A/D converter, input 4.
			O	-	**CT32B1_MAT2 —** Match output 2 for 32-bit timer 1.
PIO1_4/AD5/ CT32B1_MAT3/ WAKEUP	40[5]	no	I/O	I; PU	**PIO1_4 —** General purpose digital input/output pin with 10 ns glitch filter.
			I	-	**AD5 —** A/D converter, input 5.
			O	-	**CT32B1_MAT3 —** Match output 3 for 32-bit timer 1.
			I	-	**WAKEUP —** Deep power-down mode wake-up pin with 20 ns glitch filter. This pin must be pulled HIGH externally to enter Deep power-down mode and pulled LOW to exit Deep power-down mode. A LOW-going pulse as short as 50 ns wakes up the part.
PIO1_5/$\overline{\text{RTS}}$/ CT32B0_CAP0	45[3]	no	I/O	I; PU	**PIO1_5 —** General purpose digital input/output pin.
			O	-	**$\overline{\text{RTS}}$ —** Request To Send output for UART.
			I	-	**CT32B0_CAP0 —** Capture input 0 for 32-bit timer 0.
PIO1_6/RXD/ CT32B0_MAT0	46[3]	no	I/O	I; PU	**PIO1_6 —** General purpose digital input/output pin.
			I	-	**RXD —** Receiver input for UART.
			O	-	**CT32B0_MAT0 —** Match output 0 for 32-bit timer 0.
PIO1_7/TXD/ CT32B0_MAT1	47[3]	no	I/O	I; PU	**PIO1_7 —** General purpose digital input/output pin.
			O	-	**TXD —** Transmitter output for UART.
			O	-	**CT32B0_MAT1 —** Match output 1 for 32-bit timer 0.
PIO1_8/ CT16B1_CAP0	9[3]	no	I/O	I; PU	**PIO1_8 —** General purpose digital input/output pin.
			I	-	**CT16B1_CAP0 —** Capture input 0 for 16-bit timer 1.

All information provided in this document is subject to legal disclaimers.

© NXP B.V. 2012. All rights reserved.

Table 169. LPC1113/14/15XL pin description table (LQFP48 package) *…continued*

Symbol	Pin	Start logic input	Type	Reset state [1]	Description
PIO1_9/ CT16B1_MAT0/ MOSI1	17[3]	no	I/O	I; PU	**PIO1_9 —** General purpose digital input/output pin.
			O	-	**CT16B1_MAT0 —** Match output 0 for 16-bit timer 1.
			I/O	-	**MOSI1 —** Master Out Slave In for SPI1.
PIO1_10/AD6/ CT16B1_MAT1/ MISO1	30[5]	no	I/O	I; PU	**PIO1_10 —** General purpose digital input/output pin.
			I	-	**AD6 —** A/D converter, input 6.
			O	-	**CT16B1_MAT1 —** Match output 1 for 16-bit timer 1.
			I/O	-	**MISO1 —** Master In Slave Out for SPI1.
PIO1_11/AD7/ CT32B1_CAP1	42[5]	no	I/O	I; PU	**PIO1_11 —** General purpose digital input/output pin.
			I	-	**AD7 —** A/D converter, input 7.
			I	-	**CT32B1_CAP1 —** Capture input 1 for 32-bit timer 1.
PIO2_0 to PIO2_11			I/O		**Port 2 —** Port 2 is a 12-bit I/O port with individual direction and function controls for each bit. The operation of port 2 pins depends on the function selected through the IOCONFIG register block.
PIO2_0/$\overline{\text{DTR}}$/SSEL1	2[3]	no	I/O	I; PU	**PIO2_0 —** General purpose digital input/output pin.
			O	-	**$\overline{\text{DTR}}$ —** Data Terminal Ready output for UART.
			I/O	-	**SSEL1 —** Slave Select for SPI1.
PIO2_1/$\overline{\text{DSR}}$/SCK1	13[3]	no	I/O	I; PU	**PIO2_1 —** General purpose digital input/output pin.
			I	-	**$\overline{\text{DSR}}$ —** Data Set Ready input for UART.
			I/O	-	**SCK1 —** Serial clock for SPI1.
PIO2_2/$\overline{\text{DCD}}$/MISO1	26[3]	no	I/O	I; PU	**PIO2_2 —** General purpose digital input/output pin.
			I	-	**$\overline{\text{DCD}}$ —** Data Carrier Detect input for UART.
			I/O	-	**MISO1 —** Master In Slave Out for SPI1.
PIO2_3/$\overline{\text{RI}}$/MOSI1	38[3]	no	I/O	I; PU	**PIO2_3 —** General purpose digital input/output pin.
			I	-	**$\overline{\text{RI}}$ —** Ring Indicator input for UART.
			I/O	-	**MOSI1 —** Master Out Slave In for SPI1.
PIO2_4/ CT16B1_MAT1/ SSEL1	19[3]	no	I/O	I; PU	**PIO2_4 —** General purpose digital input/output pin.
			O	-	**CT16B1_MAT1 —** Match output 1 for 16-bit timer 1.
			O	-	**SSEL1 —** Slave Select for SPI1.
PIO2_5/ CT32B0_MAT0	20[3]	no	I/O	I; PU	**PIO2_5 —** General purpose digital input/output pin.
			O	-	**CT32B0_MAT0 —** Match output 0 for 32-bit timer 0.
PIO2_6/ CT32B0_MAT1	1[3]	no	I/O	I; PU	**PIO2_6 —** General purpose digital input/output pin.
			O	-	**CT32B0_MAT1 —** Match output 1 for 32-bit timer 0.
PIO2_7/ CT32B0_MAT2/RXD	11[3]	no	I/O	I; PU	**PIO2_7 —** General purpose digital input/output pin.
			O	-	**CT32B0_MAT2 —** Match output 2 for 32-bit timer 0.
			I	-	**RXD —** Receiver input for UART.
PIO2_8/ CT32B0_MAT3/TXD	12[3]	no	I/O	I; PU	**PIO2_8 —** General purpose digital input/output pin.
			O	-	**CT32B0_MAT3 —** Match output 3 for 32-bit timer 0.
			O	-	**TXD —** Transmitter output for UART.

All information provided in this document is subject to legal disclaimers.

© NXP B.V. 2012. All rights reserved.

Table 169. LPC1113/14/15XL pin description table (LQFP48 package) *…continued*

Symbol	Pin	Start logic input	Type	Reset state [1]	Description
PIO2_9/ CT32B0_CAP0	24[3]	no	I/O	I; PU	**PIO2_9 —** General purpose digital input/output pin.
			I	-	**CT32B0_CAP0 —** Capture input 0 for 32-bit timer 0.
PIO2_10	25[3]	no	I/O	I; PU	**PIO2_10 —** General purpose digital input/output pin.
PIO2_11/SCK0/ CT32B0_CAP1	31[3]	no	I/O	I; PU	**PIO2_11 —** General purpose digital input/output pin.
			I/O	-	**SCK0 —** Serial clock for SPI0.
			I	-	**CT32B0_CAP1 —** Capture input for 32-bit timer 0.
PIO3_0 to PIO3_5			I/O		**Port 3 —** Port 3 is a 12-bit I/O port with individual direction and function controls for each bit. The operation of port 3 pins depends on the function selected through the IOCONFIG register block. Pins PIO3_6 to PIO3_11 are not available.
PIO3_0/$\overline{\text{DTR}}$/ CT16B0_MAT0/TXD	36[3]	no	I/O	I; PU	**PIO3_0 —** General purpose digital input/output pin.
			O	-	**$\overline{\text{DTR}}$ —** Data Terminal Ready output for UART.
			O	-	**CT16B0_MAT0 —** Match output 0 for 16-bit timer 0.
			O	-	**TXD —** Transmitter Output for UART.
PIO3_1/$\overline{\text{DSR}}$/ CT16B0_MAT1/RXD	37[3]	no	I/O	I; PU	**PIO3_1 —** General purpose digital input/output pin.
			I	-	**$\overline{\text{DSR}}$ —** Data Set Ready input for UART.
			O	-	**CT16B0_MAT1 —** Match output 1 for 16-bit timer 0.
			I	-	**RXD —** Receiver input for UART.
PIO3_2/$\overline{\text{DCD}}$/ CT16B0_MAT2/ SCK1	43[3]	no	I/O	I; PU	**PIO3_2 —** General purpose digital input/output pin.
			I	-	**$\overline{\text{DCD}}$ —** Data Carrier Detect input for UART.
			O	-	**CT16B0_MAT2 —** Match output 2 for 16-bit timer 0.
			I/O	-	**SCK1 —** Serial clock for SPI1.
PIO3_3/$\overline{\text{RI}}$/ CT16B0_CAP0	48[3]	no	I/O	I; PU	**PIO3_3 —** General purpose digital input/output pin.
			I	-	**$\overline{\text{RI}}$ —** Ring Indicator input for UART.
			I	-	**CT16B0_CAP0 —** Capture input 0 for 16-bit timer 0.
PIO3_4/ CT16B0_CAP1/RXD	18[3]	no	I/O	I; PU	**PIO3_4 —** General purpose digital input/output pin.
			I	-	**CT16B0_CAP1 —** Capture input 1 for 16-bit timer 0.
			I	-	**RXD —** Receiver input for UART
PIO3_5/ CT16B1_CAP1/TXD	21[3]	no	I/O	I; PU	**PIO3_5 —** General purpose digital input/output pin.
			I	-	**CT16B1_CAP1 —** Capture input 1 for 16-bit timer 1.
			O	-	**TXD —** Transmitter output for UART
V_{DD}	8; 44	-	I	-	3.3 V supply voltage to the internal regulator, the external rail, and the ADC. Also used as the ADC reference voltage.
XTALIN	6[6]	-	I	-	Input to the oscillator circuit and internal clock generator circuits. Input voltage must not exceed 1.8 V.
XTALOUT	7[6]	-	O	-	Output from the oscillator amplifier.
V_{SS}	5; 41	-	I	-	Ground.

[1] Pin state at reset for default function: I = Input; O = Output; PU = internal pull-up enabled (pins pulled up to full V_{DD} level (V_{DD} = 3.3 V)); IA = inactive, no pull-up/down enabled.

[2] $\overline{\text{RESET}}$ functionality is not available in Deep power-down mode. Use the WAKEUP pin to reset the chip and wake up from Deep power-down mode. An external pull-up resistor is required on this pin for the Deep power-down mode.

All information provided in this document is subject to legal disclaimers.

© NXP B.V. 2012. All rights reserved.

[3] 5 V tolerant pad providing digital I/O functions with configurable pull-up/pull-down resistors and configurable hysteresis.

[4] I^2C-bus pads compliant with the I^2C-bus specification for I^2C standard mode and I^2C Fast-mode Plus.

[5] 5 V tolerant pad providing digital I/O functions with configurable pull-up/pull-down resistors, configurable hysteresis, and analog input. When configured as a ADC input, digital section of the pad is disabled and the pin is not 5 V tolerant.

[6] When the system oscillator is not used, connect XTALIN and XTALOUT as follows: XTALIN can be left floating or can be grounded (grounding is preferred to reduce susceptibility to noise). XTALOUT should be left floating.

All information provided in this document is subject to legal disclaimers.
© NXP B.V. 2012. All rights reserved.

Table 170. LPC1111/12/13/14XL pin description table (HVQFN33 package)

Symbol	Pin	Start logic input	Type	Reset state [1]	Description
PIO0_0 to PIO0_11					**Port 0 —** Port 0 is a 12-bit I/O port with individual direction and function controls for each bit. The operation of port 0 pins depends on the function selected through the IOCONFIG register block.
$\overline{\text{RESET}}$/PIO0_0	2[2]	yes	I	I;PU	**$\overline{\text{RESET}}$ —** External reset input with 20 ns glitch filter. A LOW-going pulse as short as 50 ns on this pin resets the device, causing I/O ports and peripherals to take on their default states and processor execution to begin at address 0.
			I/O	-	**PIO0_0 —** General purpose digital input/output pin with 10 ns glitch filter.
PIO0_1/CLKOUT/ CT32B0_MAT2	3[3]	yes	I/O	I;PU	**PIO0_1 —** General purpose digital input/output pin. A LOW level on this pin during reset starts the ISP command handler.
			O	-	**CLKOUT —** Clock out pin.
			O	-	**CT32B0_MAT2 —** Match output 2 for 32-bit timer 0.
PIO0_2/SSEL0/ CT16B0_CAP0	8[3]	yes	I/O	I;PU	**PIO0_2 —** General purpose digital input/output pin.
			I/O	-	**SSEL0 —** Slave select for SPI0.
			I	-	**CT16B0_CAP0 —** Capture input 0 for 16-bit timer 0.
PIO0_3	9[3]	yes	I/O	I;PU	**PIO0_3 —** General purpose digital input/output pin.
PIO0_4/SCL	10[4]	yes	I/O	I;PU	**PIO0_4 —** General purpose digital input/output pin (open-drain).
			I/O	-	**SCL —** I^2C-bus, open-drain clock input/output. High-current sink only if I^2C Fast-mode Plus is selected in the I/O configuration register.
PIO0_5/SDA	11[4]	yes	I/O	I;PU	**PIO0_5 —** General purpose digital input/output pin (open-drain).
			I/O	-	**SDA —** I^2C-bus, open-drain data input/output. High-current sink only if I^2C Fast-mode Plus is selected in the I/O configuration register.
PIO0_6/SCK0	15[3]	yes	I/O	I;PU	**PIO0_6 —** General purpose digital input/output pin.
			I/O	-	**SCK0 —** Serial clock for SPI0.
PIO0_7/$\overline{\text{CTS}}$	16[3]	yes	I/O	I;PU	**PIO0_7 —** General purpose digital input/output pin (high-current output driver).
			I	-	**$\overline{\text{CTS}}$ —** Clear To Send input for UART.
PIO0_8/MISO0/ CT16B0_MAT0	17[3]	yes	I/O	I;PU	**PIO0_8 —** General purpose digital input/output pin.
			I/O	-	**MISO0 —** Master In Slave Out for SPI0.
			O	-	**CT16B0_MAT0 —** Match output 0 for 16-bit timer 0.
PIO0_9/MOSI0/ CT16B0_MAT1	18[3]	yes	I/O	I;PU	**PIO0_9 —** General purpose digital input/output pin.
			I/O	-	**MOSI0 —** Master Out Slave In for SPI0.
			O	-	**CT16B0_MAT1 —** Match output 1 for 16-bit timer 0.
SWCLK/PIO0_10/ SCK0/ CT16B0_MAT2	19[3]	yes	I	I;PU	**SWCLK —** Serial wire clock.
			I/O	-	**PIO0_10 —** General purpose digital input/output pin.
			I/O	-	**SCK0 —** Serial clock for SPI0.
			O	-	**CT16B0_MAT2 —** Match output 2 for 16-bit timer 0.

All information provided in this document is subject to legal disclaimers.

© NXP B.V. 2012. All rights reserved.

Table 170. LPC1111/12/13/14XL pin description table (HVQFN33 package) *...continued*

Symbol	Pin	Start logic input	Type	Reset state [1]	Description
R/PIO0_11/AD0/ CT32B0_MAT3	21[5]	yes	-	I;PU	**R —** Reserved. Configure for an alternate function in the IOCONFIG block.
			I/O	-	**PIO0_11 —** General purpose digital input/output pin.
			I	-	**AD0 —** A/D converter, input 0.
			O	-	**CT32B0_MAT3 —** Match output 3 for 32-bit timer 0.
PIO1_0 to PIO1_11					**Port 1 —** Port 1 is a 12-bit I/O port with individual direction and function controls for each bit. The operation of port 1 pins depends on the function selected through the IOCONFIG register block.
R/PIO1_0/AD1/ CT32B1_CAP0	22[5]	yes	-	I;PU	**R —** Reserved. Configure for an alternate function in the IOCONFIG block.
			I/O	-	**PIO1_0 —** General purpose digital input/output pin.
			I	-	**AD1 —** A/D converter, input 1.
			I	-	**CT32B1_CAP0 —** Capture input 0 for 32-bit timer 1.
R/PIO1_1/AD2/ CT32B1_MAT0	23[5]	no	-	I;PU	**R —** Reserved. Configure for an alternate function in the IOCONFIG block.
			I/O	-	**PIO1_1 —** General purpose digital input/output pin.
			I	-	**AD2 —** A/D converter, input 2.
			O	-	**CT32B1_MAT0 —** Match output 0 for 32-bit timer 1.
R/PIO1_2/AD3/ CT32B1_MAT1	24[5]	no	-	I;PU	**R —** Reserved. Configure for an alternate function in the IOCONFIG block.
			I/O	-	**PIO1_2 —** General purpose digital input/output pin.
			I	-	**AD3 —** A/D converter, input 3.
			O	-	**CT32B1_MAT1 —** Match output 1 for 32-bit timer 1.
SWDIO/PIO1_3/ AD4/CT32B1_MAT2	25[5]	no	I/O	I;PU	**SWDIO —** Serial wire debug input/output.
			I/O	-	**PIO1_3 —** General purpose digital input/output pin.
			I	-	**AD4 —** A/D converter, input 4.
			O	-	**CT32B1_MAT2 —** Match output 2 for 32-bit timer 1.
PIO1_4/AD5/ CT32B1_MAT3/ WAKEUP	26[5]	no	I/O	I;PU	**PIO1_4 —** General purpose digital input/output pin with 10 ns glitch filter.
			I	-	**AD5 —** A/D converter, input 5.
			O	-	**CT32B1_MAT3 —** Match output 3 for 32-bit timer 1.
			I	-	**WAKEUP —** Deep power-down mode wake-up pin with 20 ns glitch filter. This pin must be pulled HIGH externally to enter Deep power-down mode and pulled LOW to exit Deep power-down mode. A LOW-going pulse as short as 50 ns wakes up the part.
PIO1_5/$\overline{\text{RTS}}$/ CT32B0_CAP0	30[3]	no	I/O	I;PU	**PIO1_5 —** General purpose digital input/output pin.
			O	-	**$\overline{\text{RTS}}$ —** Request To Send output for UART.
			I	-	**CT32B0_CAP0 —** Capture input 0 for 32-bit timer 0.
PIO1_6/RXD/ CT32B0_MAT0	31[3]	no	I/O	I;PU	**PIO1_6 —** General purpose digital input/output pin.
			I	-	**RXD —** Receiver input for UART.
			O	-	**CT32B0_MAT0 —** Match output 0 for 32-bit timer 0.

All information provided in this document is subject to legal disclaimers.

© NXP B.V. 2012. All rights reserved.

Table 170. LPC1111/12/13/14XL pin description table (HVQFN33 package) *...continued*

Symbol	Pin	Start logic input	Type	Reset state [1]	Description
PIO1_7/TXD/ CT32B0_MAT1	32[3]	no	I/O	I;PU	**PIO1_7 —** General purpose digital input/output pin.
			O	-	**TXD —** Transmitter output for UART.
			O	-	**CT32B0_MAT1 —** Match output 1 for 32-bit timer 0.
PIO1_8/ CT16B1_CAP0	7[3]	no	I/O	I;PU	**PIO1_8 —** General purpose digital input/output pin.
			I	-	**CT16B1_CAP0 —** Capture input 0 for 16-bit timer 1.
PIO1_9/ CT16B1_MAT0/ MOSI	12[3]	no	I/O	I;PU	**PIO1_9 —** General purpose digital input/output pin.
			O	-	**CT16B1_MAT0 —** Match output 0 for 16-bit timer 1.
			I/O	-	**MOSI —** Master Out Slave In for SPI1
PIO1_10/AD6/ CT16B1_MAT1/ MISO	20[5]	no	I/O	I;PU	**PIO1_10 —** General purpose digital input/output pin.
			I	-	**AD6 —** A/D converter, input 6.
			O	-	**CT16B1_MAT1 —** Match output 1 for 16-bit timer 1.
			I/O	-	**MISO1 —** Master In Slave Out for SPI1
PIO1_11/AD7/ CT32B1_CAP1	27[5]	no	I/O	I;PU	**PIO1_11 —** General purpose digital input/output pin.
			I	-	**AD7 —** A/D converter, input 7.
			I	-	**CT32B1_CAP1 —** Capture input 1 for 32-bit timer 1.
PIO2_0					**Port 2 —** Port 2 is a 12-bit I/O port with individual direction and function controls for each bit. The operation of port 2 pins depends on the function selected through the IOCONFIG register block. Pins PIO2_1 to PIO2_11 are not available.
PIO2_0/$\overline{\text{DTR}}$/SSEL1	1[3]	no	I/O	I;PU	**PIO2_0 —** General purpose digital input/output pin.
			O	-	**$\overline{\text{DTR}}$ —** Data Terminal Ready output for UART.
			I/O	-	**SSEL1 —** Slave Select for SPI1.
PIO3_0 to PIO3_5					**Port 3 —** Port 3 is a 12-bit I/O port with individual direction and function controls for each bit. The operation of port 3 pins depends on the function selected through the IOCONFIG register block. Pins PIO3_0, PIO3_1, PIO3_3 and PIO3_6 to PIO3_11 are not available.
PIO3_2/ CT16B0_MAT2/ SCK1	28[3]	no	I/O	I;PU	**PIO3_2 —** General purpose digital input/output pin.
			O	-	**CT16B0_MAT2 —** Match output 2 for 16-bit timer 0.
			I/O	-	**SCK1 —** Serial clock for SPI1.
PIO3_4/ CT16B0_CAP1/RXD	13[3]	no	I/O	I;PU	**PIO3_4 —** General purpose digital input/output pin.
			I	-	**CT16B0_CAP1 —** Capture input 1 for 16-bit timer 0.
			I	-	**RXD —** Receiver input for UART.
PIO3_5/ CT16B1_CAP1/TXD	14[3]	no	I/O	I;PU	**PIO3_5 —** General purpose digital input/output pin.
			I	-	**CT16B1_CAP1 —** Capture input 1 for 16-bit timer 1.
			O	-	**TXD —** Transmitter output for UART.

All information provided in this document is subject to legal disclaimers.

© NXP B.V. 2012. All rights reserved.

Table 170. LPC1111/12/13/14XL pin description table (HVQFN33 package) *…continued*

Symbol	Pin	Start logic input	Type	Reset state [1]	Description
V_{DD}	6; 29	-	I	-	3.3 V supply voltage to the internal regulator, the external rail, and the ADC. Also used as the ADC reference voltage.
XTALIN	4[6]	-	I	-	Input to the oscillator circuit and internal clock generator circuits. Input voltage must not exceed 1.8 V.
XTALOUT	5[6]	-	O	-	Output from the oscillator amplifier.
V_{SS}	33	-	-	-	Thermal pad. Connect to ground.

[1] Pin state at reset for default function: I = Input; O = Output; PU = internal pull-up enabled (pins pulled up to full V_{DD} level (V_{DD} = 3.3 V)); IA = inactive, no pull-up/down enabled.

[2] $\overline{\text{RESET}}$ functionality is not available in Deep power-down mode. Use the WAKEUP pin to reset the chip and wake up from Deep power-down mode. An external pull-up resistor is required on this pin for the Deep power-down mode.

[3] 5 V tolerant pad providing digital I/O functions with configurable pull-up/pull-down resistors and configurable hysteresis.

[4] I^2C-bus pads compliant with the I^2C-bus specification for I^2C standard mode and I^2C Fast-mode Plus.

[5] 5 V tolerant pad providing digital I/O functions with configurable pull-up/pull-down resistors, configurable hysteresis, and analog input. When configured as a ADC input, digital section of the pad is disabled, and the pin is not 5 V tolerant.

[6] When the system oscillator is not used, connect XTALIN and XTALOUT as follows: XTALIN can be left floating or can be grounded (grounding is preferred to reduce susceptibility to noise). XTALOUT should be left floating.

All information provided in this document is subject to legal disclaimers.

© NXP B.V. 2012. All rights reserved.

12.1 How to read this chapter

The number of GPIO pins available on each port depends on the LPC111x/LPC11Cxx part and the package. See Table 171 for available GPIO pins:

Table 171. GPIO configuration

Part	Package	GPIO port 0	GPIO port 1	GPIO port 2	GPIO port 3	Total GPIO pins
LPC1110	SO20/ TSSOP20	PIO0_0 to PIO0_2; PIO0_4 to PIO0_6; PIO0_8 to PIO0_11	PIO1_0 to PIO1_3; PIO1_6 to PIO1_7	-	-	16
LPC1111	HVQFN33	PIO0_0 to PIO0_11	PIO1_0 to PIO1_11	PIO2_0	PIO3_2; PIO3_4; PIO3_5	28
LPC1112	TSSOP20	PIO0_0 to PIO0_3; PIO0_8 to PIO0_11	PIO1_0 to PIO1_3; PIO1_6 to PIO1_7	-	-	14
	TSSOP28	PIO0_0 to PIO0_11	PIO1_0 to PIO1_9	-	-	22
	HVQFN33	PIO0_0 to PIO0_11	PIO1_0 to PIO1_11	PIO2_0	PIO3_2; PIO3_4; PIO3_5	28
	HVQFN33	PIO0_0 to PIO0_3; PIO0_4 to PIO0_11	PIO1_0 to PIO1_4; PIO1_6 to PIO1_8	-	-	
LPC1113	HVQFN33	PIO0_0 to PIO0_11	PIO1_0 to PIO1_11	PIO2_0	PIO3_2; PIO3_4; PIO3_5	28
	LQFP48	PIO0_0 to PIO0_11	PIO1_0 to PIO1_11	PIO2_0 to PIO2_11	PIO3_0 to PIO3_5	42
LPC1114	TSSOP28	PIO0_0 to PIO0_11	PIO1_0 to PIO1_9	-	-	22
	HVQFN33	PIO0_0 to PIO0_11	PIO1_0 to PIO1_11	PIO2_0	PIO3_2; PIO3_4; PIO3_5	28
	LQFP48	PIO0_0 to PIO0_11	PIO1_0 to PIO1_11	PIO2_0 to PIO2_11	PIO3_0 to PIO3_5	42
LPC11D14	LQFP100	PIO0_0 to PIO0_11	PIO1_0 to PIO1_11	PIO2_0 to PIO2_11	PIO3_0 to PIO3_5	42
LPC11C12	LQFP48	PIO0_0 to PIO0_11	PIO1_0 to PIO1_11	PIO2_0 to PIO2_11	PIO3_0 to PIO3_3	40
LPC11C14	LQFP48	PIO0_0 to PIO0_11	PIO1_0 to PIO1_11	PIO2_0 to PIO2_11	PIO3_0 to PIO3_3	40
LPC11C22	LQFP48	PIO0_0 to PIO0_11	PIO1_0 to PIO1_11 except PIO1_9	PIO2_0 to PIO2_11 except PIO2_4, PIO2_5, PIO2_9	PIO3_0 to PIO3_3	36
LPC11C24	LQFP48	PIO0_0 to PIO0_11	PIO1_0 to PIO1_11 except PIO1_9	PIO2_0 to PIO2_11 except PIO2_4, PIO2_5, PIO2_9	PIO3_0 to PIO3_3	36

Register bits corresponding to PIOn_m pins which are not available are reserved.

12.2 Introduction

12.2.1 Features

- GPIO pins can be configured as input or output by software.
- Each individual port pin can serve as an edge or level-sensitive interrupt request.
- Interrupts can be configured on single falling or rising edges and on both edges.
- Level-sensitive interrupt pins can be HIGH or LOW-active.

All information provided in this document is subject to legal disclaimers.
© NXP B.V. 2012. All rights reserved.

- All GPIO pins are inputs by default.
- Reading and writing of data registers are masked by address bits 13:2.

12.3 Register description

Each GPIO register can be up to 12 bits wide and can be read or written using word or half-word operations at word addresses.

Table 172. Register overview: GPIO (base address port 0: 0x5000 0000; port 1: 0x5001 0000, port 2: 0x5002 0000; port 3: 0x5003 0000)

Name	Access	Address offset	Description	Reset value
GPIOnDATA	R/W	0x0000 to 0x3FF8	Port n data address masking register locations for pins PIOn_0 to PIOn_11 (see Section 12.4.1).	n/a
GPIOnDATA	R/W	0x3FFC	Port n data register for pins PIOn_0 to PIOn_11	n/a
-	-	0x4000 to 0x7FFC	reserved	-
GPIOnDIR	R/W	0x8000	Data direction register for port n	0x00
GPIOnIS	R/W	0x8004	Interrupt sense register for port n	0x00
GPIOnIBE	R/W	0x8008	Interrupt both edges register for port n	0x00
GPIOnIEV	R/W	0x800C	Interrupt event register for port n	0x00
GPIOnIE	R/W	0x8010	Interrupt mask register for port n	0x00
GPIOnRIS	R	0x8014	Raw interrupt status register for port n	0x00
GPIOnMIS	R	0x8018	Masked interrupt status register for port n	0x00
GPIOnIC	W	0x801C	Interrupt clear register for port n	0x00
-	-	0x8020 - 0xFFFF	reserved	0x00

12.3.1 GPIO data register

The GPIOnDATA register holds the current logic state of the pin (HIGH or LOW), independently of whether the pin is configured as an GPIO input or output or as another digital function. If the pin is configured as GPIO output, the current value of the GPIOnDATA register is driven to the pin.

Table 173. GPIOnDATA register (GPIO0DATA, address 0x5000 0000 to 0x5000 3FFC; GPIO1DATA, address 0x5001 0000 to 0x5001 3FFC; GPIO2DATA, address 0x5002 0000 to 0x5002 3FFC; GPIO3DATA, address 0x5003 0000 to 0x5003 3FFC) bit description

Bit	Symbol	Description	Reset value	Access
11:0	DATA	Logic levels for pins PIOn_0 to PIOn_11. HIGH = 1, LOW = 0.	n/a	R/W
31:12	-	Reserved	-	-

A read of the GPIOnDATA register always returns the current logic level (state) of the pin independently of its configuration. Because there is a single data register for both the value of the output driver and the state of the pin's input, write operations have different effects depending on the pin's configuration:

All information provided in this document is subject to legal disclaimers. © NXP B.V. 2012. All rights reserved.

- If a pin is configured as GPIO input, a write to the GPIOnDATA register has no effect on the pin level. A read returns the current state of the pin.
- If a pin is configured as GPIO output, the current value of GPIOnDATA register is driven to the pin. This value can be a result of writing to the GPIOnDATA register, or it can reflect the previous state of the pin if the pin is switched to GPIO output from GPIO input or another digital function. A read returns the current state of the output latch.
- If a pin is configured as another digital function (input or output), a write to the GPIOnDATA register has no effect on the pin level. A read returns the current state of the pin even if it is configured as an output. This means that by reading the GPIOnDATA register, the digital output or input value of a function other than GPIO on that pin can be observed.

The following rules apply when the pins are switched from input to output:

- Pin is configured as input with a HIGH level applied:
  - Change pin to output: pin drives HIGH level.
- Pin is configured as input with a LOW level applied:
  - Change pin to output: pin drives LOW level.

The rules show that the pins mirror the current logic level. Therefore floating pins may drive an unpredictable level when switched from input to output.

12.3.2 GPIO data direction register

Table 174. GPIOnDIR register (GPIO0DIR, address 0x5000 8000 to GPIO3DIR, address 0x5003 8000) bit description

Bit	Symbol	Description	Reset value	Access
11:0	IO	Selects pin x as input or output (x = 0 to 11). 0 = Pin PIOn_x is configured as input. 1 = Pin PIOn_x is configured as output.	0x00	R/W
31:12	-	Reserved	-	-

12.3.3 GPIO interrupt sense register

Table 175. GPIOnIS register (GPIO0IS, address 0x5000 8004 to GPIO3IS, address 0x5003 8004) bit description

Bit	Symbol	Description	Reset value	Access
11:0	ISENSE	Selects interrupt on pin x as level or edge sensitive (x = 0 to 11). 0 = Interrupt on pin PIOn_x is configured as edge sensitive. 1 = Interrupt on pin PIOn_x is configured as level sensitive.	0x00	R/W
31:12	-	Reserved	-	-

All information provided in this document is subject to legal disclaimers.
© NXP B.V. 2012. All rights reserved.

12.3.4 GPIO interrupt both edges sense register

Table 176. GPIOnIBE register (GPIO0IBE, address 0x5000 8008 to GPIO3IBE, address 0x5003 8008) bit description

Bit	Symbol	Description	Reset value	Access
11:0	IBE	Selects interrupt on pin x to be triggered on both edges (x = 0 to 11). 0 = Interrupt on pin PIOn_x is controlled through register GPIOnIEV. 1 = Both edges on pin PIOn_x trigger an interrupt.	0x00	R/W
31:12	-	Reserved	-	-

12.3.5 GPIO interrupt event register

Table 177. GPIOnIEV register (GPIO0IEV, address 0x5000 800C to GPIO3IEV, address 0x5003 800C) bit description

Bit	Symbol	Description	Reset value	Access
11:0	IEV	Selects interrupt on pin x to be triggered rising or falling edges (x = 0 to 11). 0 = Depending on setting in register GPIOnIS (see Table 175), falling edges or LOW level on pin PIOn_x trigger an interrupt. 1 = Depending on setting in register GPIOnIS (see Table 175), rising edges or HIGH level on pin PIOn_x trigger an interrupt.	0x00	R/W
31:12	-	Reserved	-	-

12.3.6 GPIO interrupt mask register

Bits set to HIGH in the GPIOnIE register allow the corresponding pins to trigger their individual interrupts and the combined GPIOnINTR line. Clearing a bit disables interrupt triggering on that pin.

Table 178. GPIOnIE register (GPIO0IE, address 0x5000 8010 to GPIO3IE, address 0x5003 8010) bit description

Bit	Symbol	Description	Reset value	Access
11:0	MASK	Selects interrupt on pin x to be masked (x = 0 to 11). 0 = Interrupt on pin PIOn_x is masked. 1 = Interrupt on pin PIOn_x is not masked.	0x00	R/W
31:12	-	Reserved	-	-

12.3.7 GPIO raw interrupt status register

Bits read HIGH in the GPIOnRIS register reflect the raw (prior to masking) interrupt status of the corresponding pins indicating that all the requirements have been met before they are allowed to trigger the GPIOIE. Bits read as zero indicate that the corresponding input pins have not initiated an interrupt. The register is read-only.

All information provided in this document is subject to legal disclaimers.
© NXP B.V. 2012. All rights reserved.

Table 179. GPIOnRIS register (GPIO0RIS, address 0x5000 8014 to GPIO3RIS, address 0x5003 8014) bit description

Bit	Symbol	Description	Reset value	Access
11:0	RAWST	Raw interrupt status (x = 0 to 11). 0 = No interrupt on pin PIOn_x. 1 = Interrupt requirements met on PIOn_x.	0x00	R
31:12	-	Reserved	-	-

12.3.8 GPIO masked interrupt status register

Bits read HIGH in the GPIOnMIS register reflect the status of the input lines triggering an interrupt. Bits read as LOW indicate that either no interrupt on the corresponding input pins has been generated or that the interrupt is masked. GPIOMIS is the state of the interrupt after masking. The register is read-only.

Table 180. GPIOnMIS register (GPIO0MIS, address 0x5000 8018 to GPIO3MIS, address 0x5003 8018) bit description

Bit	Symbol	Description	Reset value	Access
11:0	MASK	Selects interrupt on pin x to be masked (x = 0 to 11). 0 = No interrupt or interrupt masked on pin PIOn_x. 1 = Interrupt on PIOn_x.	0x00	R
31:12	-	Reserved	-	-

12.3.9 GPIO interrupt clear register

This register allows software to clear edge detection for port bits that are identified as edge-sensitive in the Interrupt Sense register. This register has no effect on port bits identified as level-sensitive.

Table 181. GPIOnIC register (GPIO0IC, address 0x5000 801C to GPIO3IC, address 0x5003 801C) bit description

Bit	Symbol	Description	Reset value	Access
11:0	CLR	Selects interrupt on pin x to be cleared (x = 0 to 11). Clears the interrupt edge detection logic. This register is write-only. **Remark:** The synchronizer between the GPIO and the NVIC blocks causes a delay of 2 clocks. It is recommended to add two NOPs after the clear of the interrupt edge detection logic before the exit of the interrupt service routine. 0 = No effect. 1 = Clears edge detection logic for pin PIOn_x.	0x00	W
31:12	-	Reserved	-	-

All information provided in this document is subject to legal disclaimers.
© NXP B.V. 2012. All rights reserved.

12.4 Functional description

12.4.1 Write/read data operation

In order for software to be able to set GPIO bits without affecting any other pins in a single write operation, bits [13:2] of a 14-bit wide address bus are used to create a 12-bit wide mask for write and read operations on the 12 GPIO pins for each port. Only GPIOnDATA bits masked by 1 are affected by read and write operations. The masked GPIOnDATA register can be located anywhere between address offsets 0x0000 to 0x3FFC in the GPIOn address space. Reading and writing to the GPIOnDATA register at address 0x3FFC sets all masking bits to 1.

Write operation

If the address bit (i+2) associated with the GPIO port bit i (i = 0 to 11) to be written is HIGH, the value of the GPIODATA register bit i is updated. If the address bit (i+2) is LOW, the corresponding GPIODATA register bit i is left unchanged.

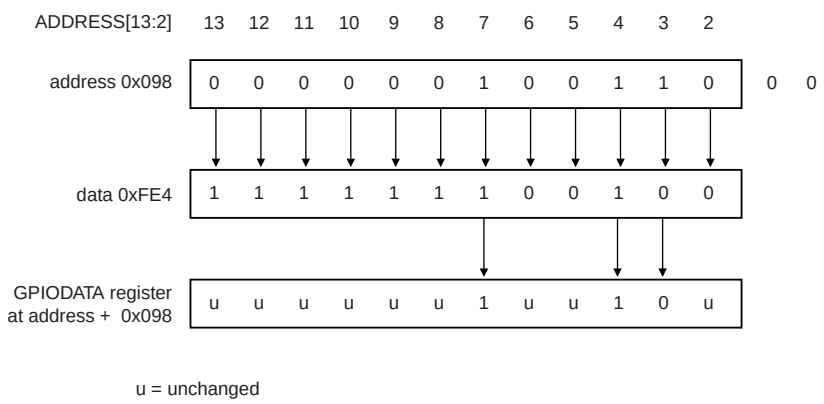

Fig 29. Masked write operation to the GPIODATA register

All information provided in this document is subject to legal disclaimers.

© NXP B.V. 2012. All rights reserved.

Read operation

If the address bit associated with the GPIO data bit is HIGH, the value is read. If the address bit is LOW, the GPIO data bit is read as 0. Reading a port DATA register yields the state of port pins 11:0 ANDed with address bits 13:2.

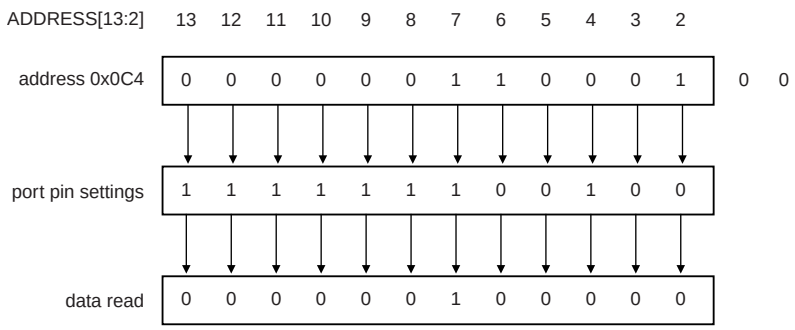

Fig 30. Masked read operation

All information provided in this document is subject to legal disclaimers.

© NXP B.V. 2012. All rights reserved.

13.1 How to read this chapter

The UART block is identical for all LPC111x, LPC11D14, and LPC11Cxx parts. The $\overline{DSR}$, $\overline{DCD}$, and $\overline{RI}$ modem signals are fully pinned out on the LQFP48 packages only.

Note that for parts of the LPC1100 series (LPC111x/101/201/301), the UART pins must be configured before the UART clock can be enabled. No enabling sequence requirement exists for parts LPC11Cxx , parts in the LPC1100L and LPC1100XL series, and LPC11D14.

13.2 Basic configuration

The UART is configured using the following registers:

1. Pins: For the LPC111x/101/201/301 parts, the UART pins must be configured in the IOCONFIG register block (Section 7.4) before the UART clocks can be enabled in the SYSAHBCLKCTRL register. For all other parts, no special enabling sequence is required.

   Remark: If the modem input pins are used, the modem function location must be also selected in the UART location registers (Section 7.4)
2. Power: In the SYSAHBCLKCTRL register, set bit 12 (Table 21).
3. Peripheral clock: Enable the UART peripheral clock by writing to the UARTCLKDIV register (Table 23).

13.3 Features

- 16-byte receive and transmit FIFOs.
- Register locations conform to ‘550 industry standard.
- Receiver FIFO trigger points at 1, 4, 8, and 14 bytes.
- Built-in baud rate generator.
- UART allows for implementation of either software or hardware flow control.
- RS-485/EIA-485 9-bit mode support with output enable.
- Modem control.

All information provided in this document is subject to legal disclaimers.
© NXP B.V. 2012. All rights reserved.

13.4 Pin description

Table 182. UART pin description

Pin	Type	Description
RXD	Input	**Serial Input.** Serial receive data.
TXD	Output	**Serial Output.** Serial transmit data.
$\overline{\text{RTS}}$	Output	Request To Send. RS-485 direction control pin.
$\overline{\text{DTR}}$	Output	Data Terminal Ready.
$\overline{\text{DSR}}$[1]	Input	Data Set Ready.
$\overline{\text{CTS}}$	Input	Clear To Send.
$\overline{\text{DCD}}$[1]	Input	Data Carrier Detect.
$\overline{\text{RI}}$[1]	Input	Ring Indicator.

[1] LQFP48 packages only.

The $\overline{\text{DSR}}$, $\overline{\text{DCD}}$, and $\overline{\text{RI}}$ modem inputs are multiplexed to two different pin locations. Use the IOCON_LOC registers (see Section 7.4) to select a physical location for each function on the LQFP48 pin package in addition to selecting the function in the IOCON registers.

The $\overline{\text{DTR}}$ output is available in two pin locations as well. The output value of the $\overline{\text{DTR}}$ pin is driven in both locations identically, and the $\overline{\text{DTR}}$ function at any location can be selected simply by selecting the function in the IOCON register for that pin location.

13.5 Register description

The UART contains registers organized as shown in Table 183. The Divisor Latch Access Bit (DLAB) is contained in U0LCR[7] and enables access to the Divisor Latches.

The reset value reflects the data stored in used bits only. It does not include the content of reserved bits.

Table 183. Register overview: UART (base address: 0x4000 8000)

Name	Access	Address offset	Description	Reset value
U0RBR	RO	0x000	Receiver Buffer Register. Contains the next received character to be read. (DLAB=0)	NA
U0THR	WO	0x000	Transmit Holding Register. The next character to be transmitted is written here. (DLAB=0)	NA
U0DLL	R/W	0x000	Divisor Latch LSB. Least significant byte of the baud rate divisor value. The full divisor is used to generate a baud rate from the fractional rate divider. (DLAB=1)	0x01
U0DLM	R/W	0x004	Divisor Latch MSB. Most significant byte of the baud rate divisor value. The full divisor is used to generate a baud rate from the fractional rate divider. (DLAB=1)	0x00
U0IER	R/W	0x004	Interrupt Enable Register. Contains individual interrupt enable bits for the 7 potential UART interrupts. (DLAB=0)	0x00
U0IIR	RO	0x008	Interrupt ID Register. Identifies which interrupt(s) are pending.	0x01
U0FCR	WO	0x008	FIFO Control Register. Controls UART FIFO usage and modes.	0x00

All information provided in this document is subject to legal disclaimers.

© NXP B.V. 2012. All rights reserved.

Table 183. Register overview: UART (base address: 0x4000 8000)

Name	Access	Address offset	Description	Reset value
U0LCR	R/W	0x00C	Line Control Register. Contains controls for frame formatting and break generation.	0x00
U0MCR	R/W	0x010	Modem control register	0x00
U0LSR	RO	0x014	Line Status Register. Contains flags for transmit and receive status, including line errors.	0x60
U0MSR	RO	0x018	Modem status register	0x00
U0SCR	R/W	0x01C	Scratch Pad Register. Eight-bit temporary storage for software.	0x00
U0ACR	R/W	0x020	Auto-baud Control Register. Contains controls for the auto-baud feature.	0x00
-	-	0x024	Reserved	-
U0FDR	R/W	0x028	Fractional Divider Register. Generates a clock input for the baud rate divider.	0x10
-	-	0x02C	Reserved	-
U0TER	R/W	0x030	Transmit Enable Register. Turns off UART transmitter for use with software flow control.	0x80
-	-	0x034 - 0x048	Reserved	-
U0RS485CTRL	R/W	0x04C	RS-485/EIA-485 Control. Contains controls to configure various aspects of RS-485/EIA-485 modes.	0x00
U0RS485ADR MATCH	R/W	0x050	RS-485/EIA-485 address match. Contains the address match value for RS-485/EIA-485 mode.	0x00
U0RS485DLY	R/W	0x054	RS-485/EIA-485 direction control delay.	0x00

All information provided in this document is subject to legal disclaimers.

© NXP B.V. 2012. All rights reserved.

13.5.1 UART Receiver Buffer Register (U0RBR - 0x4000 8000, when DLAB = 0, Read Only)

The U0RBR is the top byte of the UART RX FIFO. The top byte of the RX FIFO contains the oldest character received and can be read via the bus interface. The LSB (bit 0) represents the “oldest” received data bit. If the character received is less than 8 bits, the unused MSBs are padded with zeroes.

The Divisor Latch Access Bit (DLAB) in U0LCR must be zero in order to access the U0RBR. The U0RBR is always Read Only.

Since PE, FE and BI bits (see Table 195) correspond to the byte sitting on the top of the RBR FIFO (i.e. the one that will be read in the next read from the RBR), the right approach for fetching the valid pair of received byte and its status bits is first to read the content of the U0LSR register, and then to read a byte from the U0RBR.

Table 184. UART Receiver Buffer Register (U0RBR - address 0x4000 8000 when DLAB = 0, Read Only) bit description

Bit	Symbol	Description	Reset Value
7:0	RBR	The UART Receiver Buffer Register contains the oldest received byte in the UART RX FIFO.	undefined
31:8	-	Reserved	-

13.5.2 UART Transmitter Holding Register (U0THR - 0x4000 8000 when DLAB = 0, Write Only)

The U0THR is the top byte of the UART TX FIFO. The top byte is the newest character in the TX FIFO and can be written via the bus interface. The LSB represents the first bit to transmit.

The Divisor Latch Access Bit (DLAB) in U0LCR must be zero in order to access the U0THR. The U0THR is always Write Only.

Table 185. UART Transmitter Holding Register (U0THR - address 0x4000 8000 when DLAB = 0, Write Only) bit description

Bit	Symbol	Description	Reset Value
7:0	THR	Writing to the UART Transmit Holding Register causes the data to be stored in the UART transmit FIFO. The byte will be sent when it reaches the bottom of the FIFO and the transmitter is available.	NA
31:8	-	Reserved	-

13.5.3 UART Divisor Latch LSB and MSB Registers (U0DLL - 0x4000 8000 and U0DLM - 0x4000 8004, when DLAB = 1)

The UART Divisor Latch is part of the UART Baud Rate Generator and holds the value used, along with the Fractional Divider, to divide the UART_PCLK clock in order to produce the baud rate clock, which must be 16x the desired baud rate. The U0DLL and U0DLM registers together form a 16-bit divisor where U0DLL contains the lower 8 bits of the divisor and U0DLM contains the higher 8 bits of the divisor. A 0x0000 value is treated like a 0x0001 value as division by zero is not allowed.The Divisor Latch Access Bit (DLAB) in U0LCR must be one in order to access the UART Divisor Latches. Details on how to select the right value for U0DLL and U0DLM can be found in Section 13.5.15.

All information provided in this document is subject to legal disclaimers.

© NXP B.V. 2012. All rights reserved.

Table 186. UART Divisor Latch LSB Register (U0DLL - address 0x4000 8000 when DLAB = 1) bit description

Bit	Symbol	Description	Reset value
7:0	DLLSB	The UART Divisor Latch LSB Register, along with the U0DLM register, determines the baud rate of the UART.	0x01
31:8	-	Reserved	-

Table 187. UART Divisor Latch MSB Register (U0DLM - address 0x4000 8004 when DLAB = 1) bit description

Bit	Symbol	Description	Reset value
7:0	DLMSB	The UART Divisor Latch MSB Register, along with the U0DLL register, determines the baud rate of the UART.	0x00
31:8	-	Reserved	-

13.5.4 UART Interrupt Enable Register (U0IER - 0x4000 8004, when DLAB = 0)

The U0IER is used to enable the four UART interrupt sources.

Table 188. UART Interrupt Enable Register (U0IER - address 0x4000 8004 when DLAB = 0) bit description

Bit	Symbol	Value	Description	Reset value
0	RBRIE		RBR Interrupt Enable. Enables the Receive Data Available interrupt for UART. It also controls the Character Receive Time-out interrupt.	0
		0	Disable the RDA interrupt.	
		1	Enable the RDA interrupt.	
1	THREIE		THRE Interrupt Enable. Enables the THRE interrupt for UART. The status of this interrupt can be read from U0LSR[5].	0
		0	Disable the THRE interrupt.	
		1	Enable the THRE interrupt.	
2	RXLIE		RX Line Interrupt Enable. Enables the UART RX line status interrupts. The status of this interrupt can be read from U0LSR[4:1].	0
		0	Disable the RX line status interrupts.	
		1	Enable the RX line status interrupts.	
3	-	-	Reserved	-
6:4	-		Reserved, user software should not write ones to reserved bits. The value read from a reserved bit is not defined.	NA
7	-	-	Reserved	0
8	ABEOINTEN		Enables the end of auto-baud interrupt.	0
		0	Disable end of auto-baud Interrupt.	
		1	Enable end of auto-baud Interrupt.	

All information provided in this document is subject to legal disclaimers.

© NXP B.V. 2012. All rights reserved.

Table 188. UART Interrupt Enable Register (U0IER - address 0x4000 8004 when DLAB = 0) bit description *...continued*

Bit	Symbol	Value	Description	Reset value
9	ABTOINTEN		Enables the auto-baud time-out interrupt.	0
		0	Disable auto-baud time-out Interrupt.	
		1	Enable auto-baud time-out Interrupt.	
31:10	-		Reserved, user software should not write ones to reserved bits. The value read from a reserved bit is not defined.	NA

13.5.5 UART Interrupt Identification Register (U0IIR - 0x4004 8008, Read Only)

U0IIR provides a status code that denotes the priority and source of a pending interrupt. The interrupts are frozen during a U0IIR access. If an interrupt occurs during a U0IIR access, the interrupt is recorded for the next U0IIR access.

Table 189. UART Interrupt Identification Register (U0IIR - address 0x4004 8008, Read Only) bit description

Bit	Symbol	Value	Description	Reset value
0	INTSTATUS		Interrupt status. Note that U0IIR[0] is active low. The pending interrupt can be determined by evaluating U0IIR[3:1].	1
		0	At least one interrupt is pending.	
		1	No interrupt is pending.	
3:1	INTID		Interrupt identification. U0IER[3:1] identifies an interrupt corresponding to the UART Rx FIFO. All other combinations of U0IER[3:1] not listed below are reserved (100,101,111).	0
		0x3	1 - Receive Line Status (RLS).	
		0x2	2a - Receive Data Available (RDA).	
		0x6	2b - Character Time-out Indicator (CTI).	
		0x1	3 - THRE Interrupt.	
		0x0	4 - Modem interrupt.	
5:4	-		Reserved, user software should not write ones to reserved bits. The value read from a reserved bit is not defined.	NA
7:6	FIFOENABLE		These bits are equivalent to U0FCR[0].	0
8	ABEOINT		End of auto-baud interrupt. True if auto-baud has finished successfully and interrupt is enabled.	0
9	ABTOINT		Auto-baud time-out interrupt. True if auto-baud has timed out and interrupt is enabled.	0
31:10	-		Reserved, user software should not write ones to reserved bits. The value read from a reserved bit is not defined.	NA

Bits U0IIR[9:8] are set by the auto-baud function and signal a time-out or end of auto-baud condition. The auto-baud interrupt conditions are cleared by setting the corresponding Clear bits in the Auto-baud Control Register.

All information provided in this document is subject to legal disclaimers.

© NXP B.V. 2012. All rights reserved.

If the IntStatus bit is one and no interrupt is pending and the IntId bits will be zero. If the IntStatus is 0, a non auto-baud interrupt is pending in which case the IntId bits identify the type of interrupt and handling as described in Table 190. Given the status of U0IIR[3:0], an interrupt handler routine can determine the cause of the interrupt and how to clear the active interrupt. The U0IIR must be read in order to clear the interrupt prior to exiting the Interrupt Service Routine.

The UART RLS interrupt (U0IIR[3:1] = 011) is the highest priority interrupt and is set whenever any one of four error conditions occur on the UART RX input: overrun error (OE), parity error (PE), framing error (FE) and break interrupt (BI). The UART Rx error condition that set the interrupt can be observed via U0LSR[4:1]. The interrupt is cleared upon a U0LSR read.

The UART RDA interrupt (U0IIR[3:1] = 010) shares the second level priority with the CTI interrupt (U0IIR[3:1] = 110). The RDA is activated when the UART Rx FIFO reaches the trigger level defined in U0FCR7:6 and is reset when the UART Rx FIFO depth falls below the trigger level. When the RDA interrupt goes active, the CPU can read a block of data defined by the trigger level.

The CTI interrupt (U0IIR[3:1] = 110) is a second level interrupt and is set when the UART Rx FIFO contains at least one character and no UART Rx FIFO activity has occurred in 3.5 to 4.5 character times. Any UART Rx FIFO activity (read or write of UART RSR) will clear the interrupt. This interrupt is intended to flush the UART RBR after a message has been received that is not a multiple of the trigger level size. For example, if a peripheral wished to send a 105 character message and the trigger level was 10 characters, the CPU would receive 10 RDA interrupts resulting in the transfer of 100 characters and 1 to 5 CTI interrupts (depending on the service routine) resulting in the transfer of the remaining 5 characters.

Table 190. UART Interrupt Handling

U0IIR[3:0] value[1]	Priority	Interrupt type	Interrupt source	Interrupt reset
0001	-	None	None	-
0110	Highest	RX Line Status / Error	OE[2] or PE[2] or FE[2] or BI[2]	U0LSR Read[2]
0100	Second	RX Data Available	Rx data available or trigger level reached in FIFO (U0FCR0=1)	U0RBR Read[3] or UART FIFO drops below trigger level

All information provided in this document is subject to legal disclaimers.

© NXP B.V. 2012. All rights reserved.

Table 190. UART Interrupt Handling

U0IIR[3:0] value[1]	Priority	Interrupt type	Interrupt source	Interrupt reset
1100	Second	Character Time-out indication	Minimum of one character in the RX FIFO and no character input or removed during a time period depending on how many characters are in FIFO and what the trigger level is set at (3.5 to 4.5 character times). The exact time will be: [(word length) × 7 - 2] × 8 + [(trigger level - number of characters) × 8 + 1] RCLKs	U0RBR Read[3]
0010	Third	THRE	THRE[2]	U0IIR Read[4] (if source of interrupt) or THR write
0000	Fourth	Modem status	CTS or DSR or RI or DCD	MSR read

[1] Values “0000”, “0011”, “0101”, “0111”, “1000”, “1001”, “1010”, “1011”,”1101”,”1110”,”1111” are reserved.

[2] For details see Section 13.5.9 “UART Line Status Register (U0LSR - 0x4000 8014, Read Only)”

[3] For details see Section 13.5.1 “UART Receiver Buffer Register (U0RBR - 0x4000 8000, when DLAB = 0, Read Only)”

[4] For details see Section 13.5.5 “UART Interrupt Identification Register (U0IIR - 0x4004 8008, Read Only)” and Section 13.5.2 “UART Transmitter Holding Register (U0THR - 0x4000 8000 when DLAB = 0, Write Only)”

The UART THRE interrupt (U0IIR[3:1] = 001) is a third level interrupt and is activated when the UART THR FIFO is empty provided certain initialization conditions have been met. These initialization conditions are intended to give the UART THR FIFO a chance to fill up with data to eliminate many THRE interrupts from occurring at system start-up. The initialization conditions implement a one character delay minus the stop bit whenever THRE = 1 and there have not been at least two characters in the U0THR at one time since the last THRE = 1 event. This delay is provided to give the CPU time to write data to U0THR without a THRE interrupt to decode and service. A THRE interrupt is set immediately if the UART THR FIFO has held two or more characters at one time and currently, the U0THR is empty. The THRE interrupt is reset when a U0THR write occurs or a read of the U0IIR occurs and the THRE is the highest interrupt (U0IIR[3:1] = 001).

It is the lowest priority interrupt and is activated whenever there is any state change on modem inputs pins, DCD, DSR or CTS. In addition, a low to high transition on modem input RI will generate a modem interrupt. The source of the modem interrupt can be determined by examining MSR[3:0]. A MSR read will clear the modem interrupt.

13.5.6 UART FIFO Control Register (U0FCR - 0x4000 8008, Write Only)

The U0FCR controls the operation of the UART RX and TX FIFOs.

All information provided in this document is subject to legal disclaimers.

© NXP B.V. 2012. All rights reserved.

Table 191. UART FIFO Control Register (U0FCR - address 0x4000 8008, Write Only) bit description

Bit	Symbol	Value	Description	Reset value
0	FIFOEN		FIFO Enable	0
		0	UART FIFOs are disabled. Must not be used in the application.	
		1	Active high enable for both UART Rx and TX FIFOs and U0FCR[7:1] access. This bit must be set for proper UART operation. Any transition on this bit will automatically clear the UART FIFOs.	
1	RXFIFORES		RX FIFO Reset	0
		0	No impact on either of UART FIFOs.	
		1	Writing a logic 1 to U0FCR[1] will clear all bytes in UART Rx FIFO, reset the pointer logic. This bit is self-clearing.	
2	TXFIFORES		TX FIFO Reset	0
		0	No impact on either of UART FIFOs.	
		1	Writing a logic 1 to U0FCR[2] will clear all bytes in UART TX FIFO, reset the pointer logic. This bit is self-clearing.	
3	-	-	Reserved	0
5:4	-		Reserved, user software should not write ones to reserved bits. The value read from a reserved bit is not defined.	NA
7:6	RXTL		RX Trigger Level. These two bits determine how many receiver UART FIFO characters must be written before an interrupt is activated.	0
		0x0	Trigger level 0 (1 character or 0x01).	
		0x1	Trigger level 1 (4 characters or 0x04).	
		0x2	Trigger level 2 (8 characters or 0x08).	
		0x3	Trigger level 3 (14 characters or 0x0E).	
31:8	-	-	Reserved	-

13.5.7 UART Line Control Register (U0LCR - 0x4000 800C)

The U0LCR determines the format of the data character that is to be transmitted or received.

Table 192. UART Line Control Register (U0LCR - address 0x4000 800C) bit description

Bit	Symbol	Value	Description	Reset Value
1:0	WLS		Word Length Select	0
		0x0	5-bit character length.	
		0x1	6-bit character length.	
		0x2	7-bit character length.	
		0x3	8-bit character length.	
2	SBS		Stop Bit Select	0
		0	1 stop bit.	
		1	2 stop bits (1.5 if U0LCR[1:0]=00).	

All information provided in this document is subject to legal disclaimers.

© NXP B.V. 2012. All rights reserved.

Table 192. UART Line Control Register (U0LCR - address 0x4000 800C) bit description

Bit	Symbol	Value	Description	Reset Value
3	PE		Parity Enable	0
		0	Disable parity generation and checking.	
		1	Enable parity generation and checking.	
5:4	PS		Parity Select	0
		0x0	Odd parity. Number of 1s in the transmitted character and the attached parity bit will be odd.	
		0x1	Even Parity. Number of 1s in the transmitted character and the attached parity bit will be even.	
		0x2	Forced 1 stick parity.	
		0x3	Forced 0 stick parity.	
6	BC		Break Control	0
		0	Disable break transmission.	
		1	Enable break transmission. Output pin UART TXD is forced to logic 0 when U0LCR[6] is active high.	
7	DLAB		Divisor Latch Access Bit	0
		0	Disable access to Divisor Latches.	
		1	Enable access to Divisor Latches.	
31:8	-	-	Reserved	-

13.5.8 UART Modem Control Register

The U0MCR enables the modem loopback mode and controls the modem output signals.

Table 193. UART0 Modem Control Register (U0MCR - address 0x4000 8010) bit description

Bit	Symbol	Value	Description	Reset value
0	DTRC		DTR Control. Source for modem output pin, $\overline{DTR}$. This bit reads as 0 when modem loopback mode is active.	0
1	RTSC		RTS Control. Source for modem output pin $\overline{RTS}$. This bit reads as 0 when modem loopback mode is active.	0
3:2	-		Reserved, user software should not write ones to reserved bits. The value read from a reserved bit is not defined.	0

All information provided in this document is subject to legal disclaimers.

© NXP B.V. 2012. All rights reserved.

Table 193. UART0 Modem Control Register (U0MCR - address 0x4000 8010) bit description

Bit	Symbol	Value	Description	Reset value
4	LMS		Loopback Mode Select. The modem loopback mode provides a mechanism to perform diagnostic loopback testing. Serial data from the transmitter is connected internally to serial input of the receiver. Input pin, RXD, has no effect on loopback and output pin, TXD is held in marking state. The four modem inputs ($\overline{CTS}$, $\overline{DSR}$, $\overline{RI}$ and $\overline{DCD}$) are disconnected externally. Externally, the modem outputs ($\overline{RTS}$, $\overline{DTR}$) are set inactive. Internally, the four modem outputs are connected to the four modem inputs. As a result of these connections, the upper four bits of the U0MSR will be driven by the lower four bits of the U0MCR rather than the four modem inputs in normal mode. This permits modem status interrupts to be generated in loopback mode by writing the lower four bits of U0MCR.	0
		0	Disable modem loopback mode.	
		1	Enable modem loopback mode.	
5	-		Reserved, user software should not write ones to reserved bits. The value read from a reserved bit is not defined.	0
6	RTSEN		RTS flow control	0
		0	Disable auto-rts flow control.	
		1	Enable auto-rts flow control.	
7	CTSEN		CTS flow control	0
		0	Disable auto-cts flow control.	
		1	Enable auto-cts flow control.	
31:8	-	-	Reserved	-

13.5.8.1 Auto-flow control

If auto-RTS mode is enabled the UART‘s receiver FIFO hardware controls the $\overline{RTS}$ output of the UART. If the auto-CTS mode is enabled the UART‘s U0TSR hardware will only start transmitting if the $\overline{CTS}$ input signal is asserted.

13.5.8.1.1 Auto-RTS

The auto-RTS function is enabled by setting the RTSen bit. Auto-RTS data flow control originates in the U0RBR module and is linked to the programmed receiver FIFO trigger level. If auto-RTS is enabled, the data-flow is controlled as follows:

When the receiver FIFO level reaches the programmed trigger level, $\overline{RTS}$ is deasserted (to a high value). It is possible that the sending UART sends an additional byte after the trigger level is reached (assuming the sending UART has another byte to send) because it might not recognize the deassertion of $\overline{RTS}$ until after it has begun sending the additional byte. $\overline{RTS}$ is automatically reasserted (to a low value) once the receiver FIFO has reached the previous trigger level. The reassertion of $\overline{RTS}$ signals the sending UART to continue transmitting data.

If Auto-RTS mode is disabled, the RTSen bit controls the $\overline{RTS}$ output of the UART. If Auto-RTS mode is enabled, hardware controls the $\overline{RTS}$ output, and the actual value of $\overline{RTS}$ will be copied in the RTS Control bit of the UART. As long as Auto-RTS is enabled, the value of the RTS Control bit is read-only for software.

All information provided in this document is subject to legal disclaimers.

© NXP B.V. 2012. All rights reserved.

Example: Suppose the UART operating in type '550 mode has the trigger level in U0FCR set to 0x2, then, if Auto-RTS is enabled, the UART will deassert the $\overline{RTS}$ output as soon as the receive FIFO contains 8 bytes (Table 191 on page 198). The $\overline{RTS}$ output will be reasserted as soon as the receive FIFO hits the previous trigger level: 4 bytes.

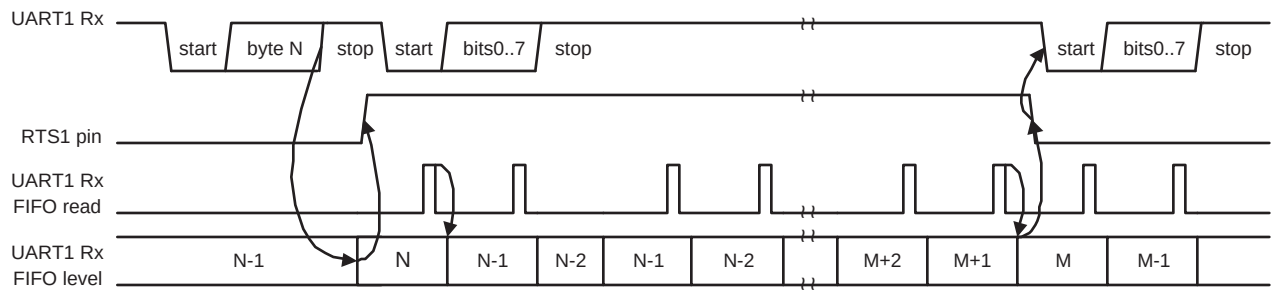

Fig 31. Auto-RTS Functional Timing

13.5.8.1.2 Auto-CTS

The Auto-CTS function is enabled by setting the CTSen bit. If Auto-CTS is enabled, the transmitter circuitry in the U0TSR module checks $\overline{CTS}$ input before sending the next data byte. When $\overline{CTS}$ is active (low), the transmitter sends the next byte. To stop the transmitter from sending the following byte, $\overline{CTS}$ must be released before the middle of the last stop bit that is currently being sent. In Auto-CTS mode, a change of the $\overline{CTS}$ signal does not trigger a modem status interrupt unless the CTS Interrupt Enable bit is set, Delta CTS bit in the U0MSR will be set though. Table 194 lists the conditions for generating a Modem Status interrupt.

Table 194. Modem status interrupt generation

Enable modem status interrupt (U0ER[3])	CTSen (U0MCR[7])	CTS interrupt enable (U0IER[7])	Delta CTS (U0MSR[0])	Delta DCD or trailing edge RI or Delta DSR (U0MSR[3] or U0MSR[2] or U0MSR[1])	Modem status interrupt
0	x	x	x	x	No
1	0	x	0	0	No
1	0	x	1	x	Yes
1	0	x	x	1	Yes
1	1	0	x	0	No
1	1	0	x	1	Yes
1	1	1	0	0	No
1	1	1	1	x	Yes
1	1	1	x	1	Yes

The auto-$\overline{CTS}$ function reduces interrupts to the host system. When flow control is enabled, a $\overline{CTS}$ state change does not trigger host interrupts because the device automatically controls its own transmitter. Without Auto-CTS, the transmitter sends any data present in the transmit FIFO and a receiver overrun error can result. Figure 32 illustrates the Auto-CTS functional timing.

All information provided in this document is subject to legal disclaimers.

© NXP B.V. 2012. All rights reserved.

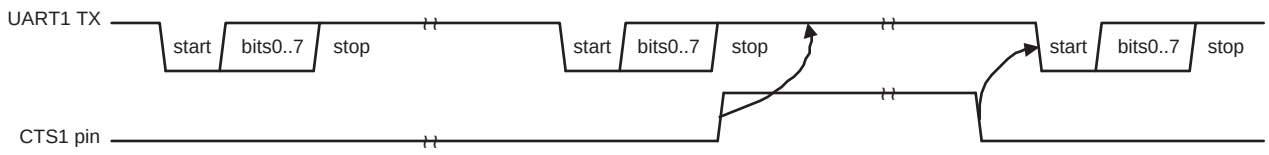

Fig 32. Auto-CTS Functional Timing

While starting transmission of the initial character, the $\overline{CTS}$ signal is asserted. Transmission will stall as soon as the pending transmission has completed. The UART will continue transmitting a 1 bit as long as $\overline{CTS}$ is de-asserted (high). As soon as $\overline{CTS}$ gets de-asserted, transmission resumes and a start bit is sent followed by the data bits of the next character.

13.5.9 UART Line Status Register (U0LSR - 0x4000 8014, Read Only)

The U0LSR is a Read Only register that provides status information on the UART TX and RX blocks.

Table 195. UART Line Status Register (U0LSR - address 0x4000 8014, Read Only) bit description

Bit	Symbol	Value	Description	Reset Value
0	RDR		Receiver Data Ready. U0LSR[0] is set when the U0RBR holds an unread character and is cleared when the UART RBR FIFO is empty.	0
		0	U0RBR is empty.	
		1	U0RBR contains valid data.	
1	OE		Overrun Error. The overrun error condition is set as soon as it occurs. A U0LSR read clears U0LSR[1]. U0LSR[1] is set when UART RSR has a new character assembled and the UART RBR FIFO is full. In this case, the UART RBR FIFO will not be overwritten and the character in the UART RSR will be lost.	0
		0	Overrun error status is inactive.	
		1	Overrun error status is active.	
2	PE		Parity Error. When the parity bit of a received character is in the wrong state, a parity error occurs. A U0LSR read clears U0LSR[2]. Time of parity error detection is dependent on U0FCR[0]. **Note:** A parity error is associated with the character at the top of the UART RBR FIFO.	0
		0	Parity error status is inactive.	
		1	Parity error status is active.	

All information provided in this document is subject to legal disclaimers.

© NXP B.V. 2012. All rights reserved.

Table 195. UART Line Status Register (U0LSR - address 0x4000 8014, Read Only) bit description *...continued*

Bit	Symbol	Value	Description	Reset Value
3	FE		Framing Error. When the stop bit of a received character is a logic 0, a framing error occurs. A U0LSR read clears U0LSR[3]. The time of the framing error detection is dependent on U0FCR0. Upon detection of a framing error, the RX will attempt to re-synchronize to the data and assume that the bad stop bit is actually an early start bit. However, it cannot be assumed that the next received byte will be correct even if there is no Framing Error. **Note:** A framing error is associated with the character at the top of the UART RBR FIFO.	0
		0	Framing error status is inactive.	
		1	Framing error status is active.	
4	BI		Break Interrupt. When RXD1 is held in the spacing state (all zeros) for one full character transmission (start, data, parity, stop), a break interrupt occurs. Once the break condition has been detected, the receiver goes idle until RXD1 goes to marking state (all ones). A U0LSR read clears this status bit. The time of break detection is dependent on U0FCR[0]. **Note:** The break interrupt is associated with the character at the top of the UART RBR FIFO.	0
		0	Break interrupt status is inactive.	
		1	Break interrupt status is active.	
5	THRE		Transmitter Holding Register Empty. THRE is set immediately upon detection of an empty UART THR and is cleared on a U0THR write.	1
		0	U0THR contains valid data.	
		1	U0THR is empty.	
6	TEMT		Transmitter Empty. TEMT is set when both U0THR and U0TSR are empty; TEMT is cleared when either the U0TSR or the U0THR contain valid data. This bit is updated as soon as 50 % of the first stop bit has been transmitted or a byte has been written into the THR.	1
		0	U0THR and/or the U0TSR contains valid data.	
		1	U0THR and the U0TSR are empty.	
7	RXFE		Error in RX FIFO. U0LSR[7] is set when a character with a RX error such as framing error, parity error or break interrupt, is loaded into the U0RBR. This bit is cleared when the U0LSR register is read and there are no subsequent errors in the UART FIFO.	0
		0	U0RBR contains no UART RX errors or U0FCR[0]=0.	
		1	UART RBR contains at least one UART RX error.	
31:8	-	-	Reserved	-

All information provided in this document is subject to legal disclaimers.

© NXP B.V. 2012. All rights reserved.

13.5.10 UART Modem Status Register

The U0MSR is a read-only register that provides status information on the modem input signals. U0MSR[3:0] is cleared on U0MSR read. Note that modem signals have no direct effect on the UART operation. They facilitate the software implementation of modem signal operations.

Table 196. UART Modem Status Register (U0MSR - address 0x4000 8018) bit description

Bit	Symbol	Value	Description	Reset Value
0	DCTS		Delta CTS. Set upon state change of input $\overline{CTS}$. Cleared on a U0MSR read.	0
		0	No change detected on modem input $\overline{CTS}$.	
		1	State change detected on modem input $\overline{CTS}$.	
1	DDSR		Delta DSR. Set upon state change of input $\overline{DSR}$. Cleared on a U0MSR read.	0
		0	No change detected on modem input $\overline{DSR}$.	
		1	State change detected on modem input $\overline{DSR}$.	
2	TERI		Trailing Edge RI. Set upon low to high transition of input $\overline{RI}$. Cleared on a U0MSR read.	0
		0	No change detected on modem input, $\overline{RI}$.	
		1	Low-to-high transition detected on $\overline{RI}$.	
3	DDCD		Delta DCD. Set upon state change of input $\overline{DCD}$. Cleared on a U0MSR read.	0
		0	No change detected on modem input $\overline{DCD}$.	
		1	State change detected on modem input $\overline{DCD}$.	
4	CTS		Clear To Send State. Complement of input signal $\overline{CTS}$. This bit is connected to U0MCR[1] in modem loopback mode.	0
5	DSR		Data Set Ready State. Complement of input signal $\overline{DSR}$. This bit is connected to U0MCR[0] in modem loopback mode.	0
6	RI		Ring Indicator State. Complement of input $\overline{RI}$. This bit is connected to U0MCR[2] in modem loopback mode.	0
7	DCD		Data Carrier Detect State. Complement of input $\overline{DCD}$. This bit is connected to U0MCR[3] in modem loopback mode.	0
31:8	-	-	Reserved	-

13.5.11 UART Scratch Pad Register (U0SCR - 0x4000 801C)

The U0SCR has no effect on the UART operation. This register can be written and/or read at user's discretion. There is no provision in the interrupt interface that would indicate to the host that a read or write of the U0SCR has occurred.

Table 197. UART Scratch Pad Register (U0SCR - address 0x4000 801C) bit description

Bit	Symbol	Description	Reset Value
7:0	Pad	A readable, writable byte.	0x00
31:8	-	Reserved	-

All information provided in this document is subject to legal disclaimers.

© NXP B.V. 2012. All rights reserved.

13.5.12 UART Auto-baud Control Register (U0ACR - 0x4000 8020)

The UART Auto-baud Control Register (U0ACR) controls the process of measuring the incoming clock/data rate for the baud rate generation and can be read and written at user's discretion.

Table 198. Auto baud Control Register (U0ACR - address 0x4000 8020) bit description

Bit	Symbol	Value	Description	Reset value
0	START		Start bit. This bit is automatically cleared after auto-baud completion.	0
		0	Auto-baud stop (auto-baud is not running).	
		1	Auto-baud start (auto-baud is running). Auto-baud run bit. This bit is automatically cleared after auto-baud completion.	
1	MODE		Auto-baud mode select	0
		0	Mode 0.	
		1	Mode 1.	
2	AUTORESTART		Restart enable	0
		0	No restart	
		1	Restart in case of time-out (counter restarts at next UART Rx falling edge)	0
7:3	-		Reserved, user software should not write ones to reserved bits. The value read from a reserved bit is not defined.	0
8	ABEOINTCLR		End of auto-baud interrupt clear (write only accessible)	0
		0	Writing a 0 has no impact.	
		1	Writing a 1 will clear the corresponding interrupt in the U0IIR.	
9	ABTOINTCLR		Auto-baud time-out interrupt clear (write only accessible)	0
		0	Writing a 0 has no impact.	
		1	Writing a 1 will clear the corresponding interrupt in the U0IIR.	
31:10	-		Reserved, user software should not write ones to reserved bits. The value read from a reserved bit is not defined.	0

13.5.13 Auto-baud

The UART auto-baud function can be used to measure the incoming baud rate based on the "AT" protocol (Hayes command). If enabled the auto-baud feature will measure the bit time of the receive data stream and set the divisor latch registers U0DLM and U0DLL accordingly.

Auto-baud is started by setting the U0ACR Start bit. Auto-baud can be stopped by clearing the U0ACR Start bit. The Start bit will clear once auto-baud has finished and reading the bit will return the status of auto-baud (pending/finished).

All information provided in this document is subject to legal disclaimers.

© NXP B.V. 2012. All rights reserved.

Two auto-baud measuring modes are available which can be selected by the U0ACR Mode bit. In Mode 0 the baud rate is measured on two subsequent falling edges of the UART Rx pin (the falling edge of the start bit and the falling edge of the least significant bit). In Mode 1 the baud rate is measured between the falling edge and the subsequent rising edge of the UART Rx pin (the length of the start bit).

The U0ACR AutoRestart bit can be used to automatically restart baud rate measurement if a time-out occurs (the rate measurement counter overflows). If this bit is set, the rate measurement will restart at the next falling edge of the UART Rx pin.

The auto-baud function can generate two interrupts.

- The U0IIR ABTOInt interrupt will get set if the interrupt is enabled (U0IER ABToIntEn is set and the auto-baud rate measurement counter overflows).
- The U0IIR ABEOInt interrupt will get set if the interrupt is enabled (U0IER ABEOIntEn is set and the auto-baud has completed successfully).

The auto-baud interrupts have to be cleared by setting the corresponding U0ACR ABTOIntClr and ABEOIntEn bits.

The fractional baud rate generator must be disabled (DIVADDVAL = 0) during auto-baud. Also, when auto-baud is used, any write to U0DLM and U0DLL registers should be done before U0ACR register write. The minimum and the maximum baud rates supported by UART are function of UART_PCLK, number of data bits, stop bits and parity bits.

(2)

$$ratemin = \frac{2 \times PCLK}{16 \times 2^{15}} \leq UART_{baudrate} \leq \frac{PCLK}{16 \times (2 + databits + paritybits + stopbits)} = ratemax$$

13.5.14 Auto-baud modes

When the software is expecting an ”AT" command, it configures the UART with the expected character format and sets the U0ACR Start bit. The initial values in the divisor latches U0DLM and U0DLM don‘t care. Because of the ”A" or ”a" ASCII coding (”A" = 0x41, ”a" = 0x61), the UART Rx pin sensed start bit and the LSB of the expected character are delimited by two falling edges. When the U0ACR Start bit is set, the auto-baud protocol will execute the following phases:

1. On U0ACR Start bit setting, the baud rate measurement counter is reset and the UART U0RSR is reset. The U0RSR baud rate is switched to the highest rate.
2. A falling edge on UART Rx pin triggers the beginning of the start bit. The rate measuring counter will start counting UART_PCLK cycles.
3. During the receipt of the start bit, 16 pulses are generated on the RSR baud input with the frequency of the UART input clock, guaranteeing the start bit is stored in the U0RSR.

All information provided in this document is subject to legal disclaimers.

© NXP B.V. 2012. All rights reserved.

4. During the receipt of the start bit (and the character LSB for Mode = 0), the rate counter will continue incrementing with the pre-scaled UART input clock (UART_PCLK).
5. If Mode = 0, the rate counter will stop on next falling edge of the UART Rx pin. If Mode = 1, the rate counter will stop on the next rising edge of the UART Rx pin.
6. The rate counter is loaded into U0DLM/U0DLL and the baud rate will be switched to normal operation. After setting the U0DLM/U0DLL, the end of auto-baud interrupt U0IIR ABEOInt will be set, if enabled. The U0RSR will now continue receiving the remaining bits of the ”A/a" character.

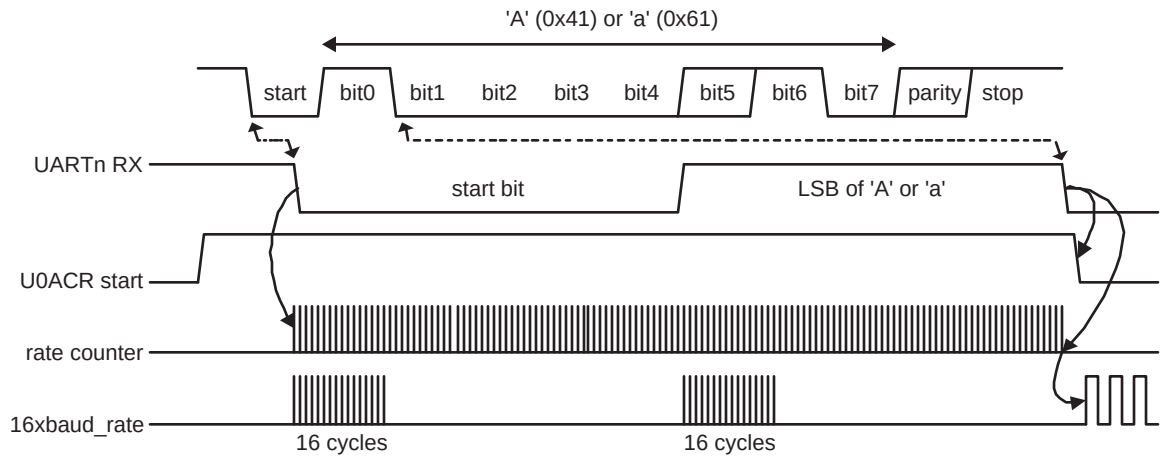

a. Mode 0 (start bit and LSB are used for auto-baud)

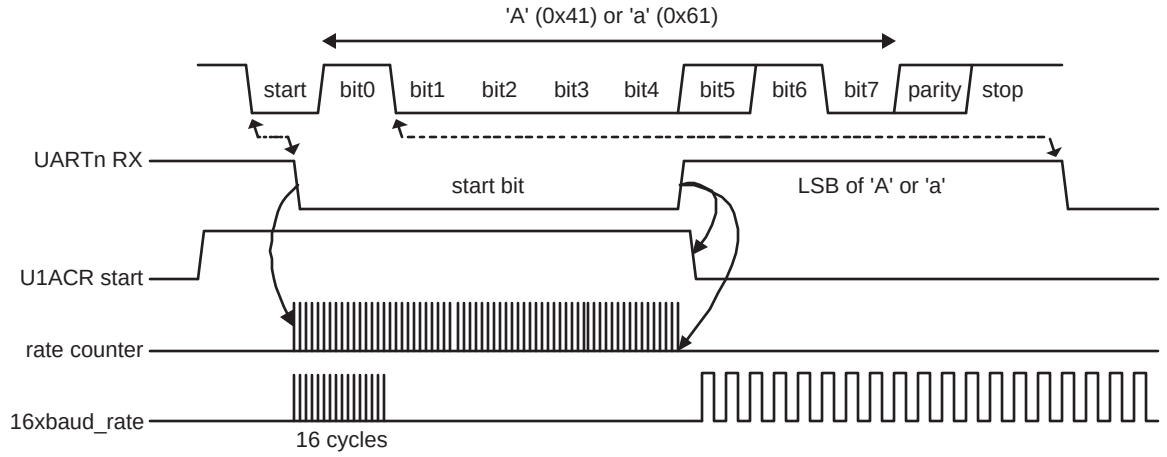

b. Mode 1 (only start bit is used for auto-baud)

Fig 33. Auto-baud a) mode 0 and b) mode 1 waveform

All information provided in this document is subject to legal disclaimers.

© NXP B.V. 2012. All rights reserved.

13.5.15 UART Fractional Divider Register (U0FDR - 0x4000 8028)

The UART Fractional Divider Register (U0FDR) controls the clock pre-scaler for the baud rate generation and can be read and written at the user's discretion. This pre-scaler takes the APB clock and generates an output clock according to the specified fractional requirements.

Important: If the fractional divider is active (DIVADDVAL > 0) and DLM = 0, the value of the DLL register must be 3 or greater.

Table 199. UART Fractional Divider Register (U0FDR - address 0x4000 8028) bit description

Bit	Function	Description	Reset value
3:0	DIVADDVAL	Baud rate generation pre-scaler divisor value. If this field is 0, fractional baud rate generator will not impact the UART baud rate.	0
7:4	MULVAL	Baud rate pre-scaler multiplier value. This field must be greater or equal 1 for UART to operate properly, regardless of whether the fractional baud rate generator is used or not.	1
31:8	-	Reserved, user software should not write ones to reserved bits. The value read from a reserved bit is not defined.	0

This register controls the clock pre-scaler for the baud rate generation. The reset value of the register keeps the fractional capabilities of UART disabled making sure that UART is fully software and hardware compatible with UARTs not equipped with this feature.

The UART baud rate can be calculated as:

$$UART_{baudrate} = \frac{PCLK}{16 \times (256 \times U0DLM + U0DLL) \times \left(1 + \frac{DivAddVal}{MulVal}\right)} \quad (3)$$

Where UART_PCLK is the peripheral clock, U0DLM and U0DLL are the standard UART baud rate divider registers, and DIVADDVAL and MULVAL are UART fractional baud rate generator specific parameters.

The value of MULVAL and DIVADDVAL should comply to the following conditions:

1. $1 \leq$ MULVAL ≤ 15
2. $0 \leq$ DIVADDVAL ≤ 14
3. DIVADDVAL< MULVAL

The value of the U0FDR should not be modified while transmitting/receiving data or data may be lost or corrupted.

If the U0FDR register value does not comply to these two requests, then the fractional divider output is undefined. If DIVADDVAL is zero then the fractional divider is disabled, and the clock will not be divided.

All information provided in this document is subject to legal disclaimers.

© NXP B.V. 2012. All rights reserved.

13.5.15.1 Baud rate calculation

UART can operate with or without using the Fractional Divider. In real-life applications it is likely that the desired baud rate can be achieved using several different Fractional Divider settings. The following algorithm illustrates one way of finding a set of DLM, DLL, MULVAL, and DIVADDVAL values. Such set of parameters yields a baud rate with a relative error of less than 1.1% from the desired one.

All information provided in this document is subject to legal disclaimers.

© NXP B.V. 2012. All rights reserved.

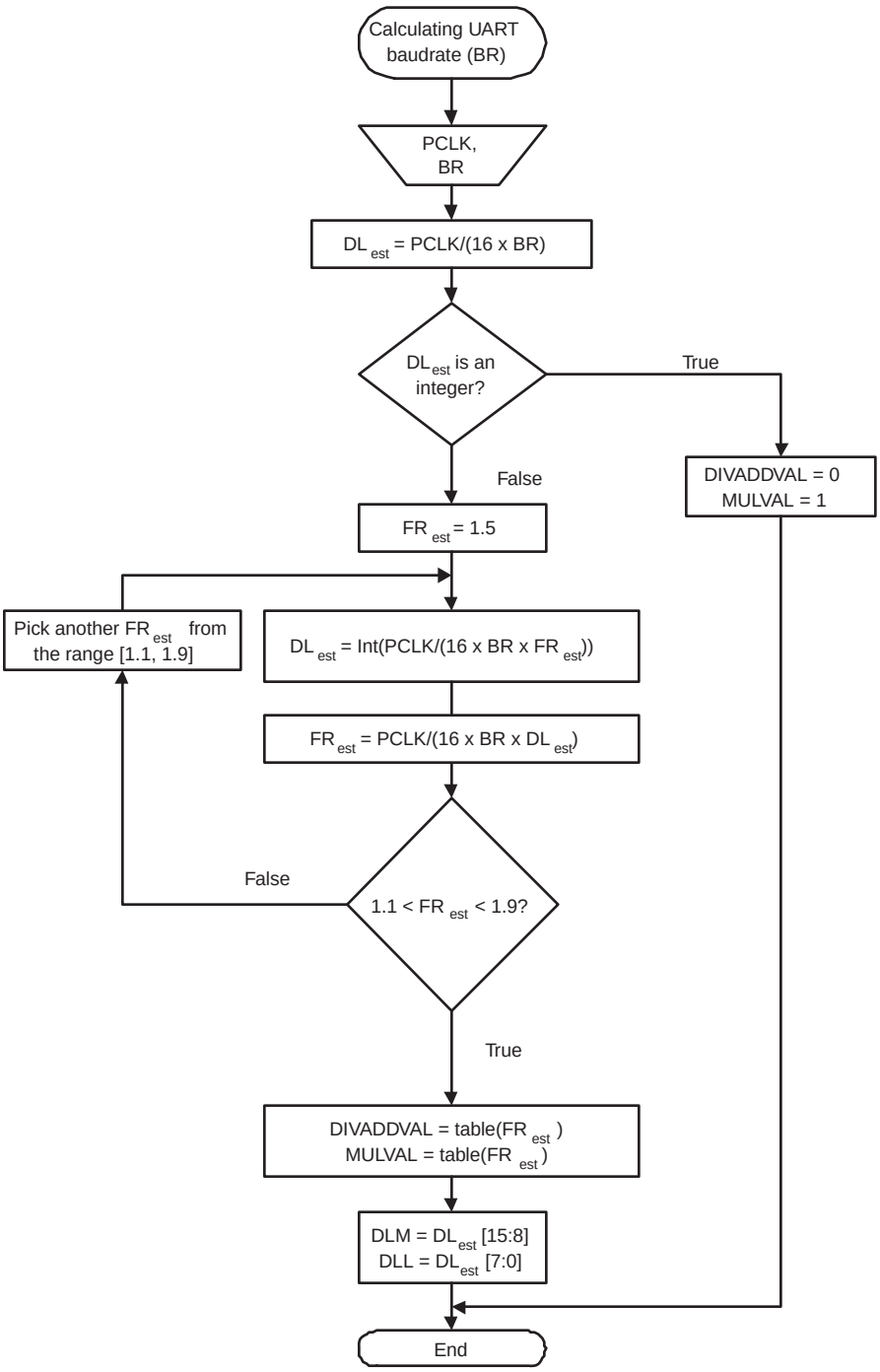

Fig 34. Algorithm for setting UART dividers

All information provided in this document is subject to legal disclaimers.

© NXP B.V. 2012. All rights reserved.

Table 200. Fractional Divider setting look-up table

FR	DivAddVal/ MulVal	FR	DivAddVal/ MulVal	FR	DivAddVal/ MulVal	FR	DivAddVal/ MulVal
1.000	0/1	1.250	1/4	1.500	1/2	1.750	3/4
1.067	1/15	1.267	4/15	1.533	8/15	1.769	10/13
1.071	1/14	1.273	3/11	1.538	7/13	1.778	7/9
1.077	1/13	1.286	2/7	1.545	6/11	1.786	11/14
1.083	1/12	1.300	3/10	1.556	5/9	1.800	4/5
1.091	1/11	1.308	4/13	1.571	4/7	1.818	9/11
1.100	1/10	1.333	1/3	1.583	7/12	1.833	5/6
1.111	1/9	1.357	5/14	1.600	3/5	1.846	11/13
1.125	1/8	1.364	4/11	1.615	8/13	1.857	6/7
1.133	2/15	1.375	3/8	1.625	5/8	1.867	13/15
1.143	1/7	1.385	5/13	1.636	7/11	1.875	7/8
1.154	2/13	1.400	2/5	1.643	9/14	1.889	8/9
1.167	1/6	1.417	5/12	1.667	2/3	1.900	9/10
1.182	2/11	1.429	3/7	1.692	9/13	1.909	10/11
1.200	1/5	1.444	4/9	1.700	7/10	1.917	11/12
1.214	3/14	1.455	5/11	1.714	5/7	1.923	12/13
1.222	2/9	1.462	6/13	1.727	8/11	1.929	13/14
1.231	3/13	1.467	7/15	1.733	11/15	1.933	14/15

13.5.15.1.1 Example 1: UART_PCLK = 14.7456 MHz, BR = 9600

According to the provided algorithm DL_{est} = PCLK/(16 x BR) = 14.7456 MHz / (16 x 9600) = 96. Since this DL_{est} is an integer number, DIVADDVAL = 0, MULVAL = 1, DLM = 0, and DLL = 96.

13.5.15.1.2 Example 2: UART_PCLK = 12 MHz, BR = 115200

According to the provided algorithm DL_{est} = PCLK/(16 x BR) = 12 MHz / (16 x 115200) = 6.51. This DL_{est} is not an integer number and the next step is to estimate the FR parameter. Using an initial estimate of FR_{est} = 1.5 a new DL_{est} = 4 is calculated and FR_{est} is recalculated as FR_{est} = 1.628. Since FR_{est} = 1.628 is within the specified range of 1.1 and 1.9, DIVADDVAL and MULVAL values can be obtained from the attached look-up table.

The closest value for FRest = 1.628 in the look-up Table 200 is FR = 1.625. It is equivalent to DIVADDVAL = 5 and MULVAL = 8.

Based on these findings, the suggested UART setup would be: DLM = 0, DLL = 4, DIVADDVAL = 5, and MULVAL = 8. According to Equation 3, the UART's baud rate is 115384. This rate has a relative error of 0.16% from the originally specified 115200.

13.5.16 UART Transmit Enable Register (U0TER - 0x4000 8030)

In addition to being equipped with full hardware flow control (auto-cts and auto-rts mechanisms described above), U0TER enables implementation of software flow control. When TxEn = 1, UART transmitter will keep sending data as long as they are available. As soon as TxEn becomes 0, UART transmission will stop.

All information provided in this document is subject to legal disclaimers.

© NXP B.V. 2012. All rights reserved.

Although Table 201 describes how to use TxEn bit in order to achieve hardware flow control, it is strongly suggested to let UART hardware implemented auto flow control features take care of this, and limit the scope of TxEn to software flow control.

Table 201 describes how to use TXEN bit in order to achieve software flow control.

Table 201. UART Transmit Enable Register (U0TER - address 0x4000 8030) bit description

Bit	Symbol	Description	Reset Value
6:0	-	Reserved, user software should not write ones to reserved bits. The value read from a reserved bit is not defined.	NA
7	TXEN	When this bit is 1, as it is after a Reset, data written to the THR is output on the TXD pin as soon as any preceding data has been sent. If this bit cleared to 0 while a character is being sent, the transmission of that character is completed, but no further characters are sent until this bit is set again. In other words, a 0 in this bit blocks the transfer of characters from the THR or TX FIFO into the transmit shift register. Software can clear this bit when it detects that the a hardware-handshaking TX-permit signal ($\overline{CTS}$) has gone false, or with software handshaking, when it receives an XOFF character (DC3). Software can set this bit again when it detects that the TX-permit signal has gone true, or when it receives an XON (DC1) character.	1
31:8	-	Reserved	-

13.5.17 UART RS485 Control register (U0RS485CTRL - 0x4000 804C)

The U0RS485CTRL register controls the configuration of the UART in RS-485/EIA-485 mode.

Table 202. UART RS485 Control register (U0RS485CTRL - address 0x4000 804C) bit description

Bit	Symbol	Value	Description	Reset value
0	NMMEN		NMM enable.	0
		0	RS-485/EIA-485 Normal Multidrop Mode (NMM) is disabled.	
		1	RS-485/EIA-485 Normal Multidrop Mode (NMM) is enabled. In this mode, an address is detected when a received byte causes the UART to set the parity error and generate an interrupt.	
1	RXDIS		Receiver enable.	0
		0	The receiver is enabled.	
		1	The receiver is disabled.	
2	AADEN		AAD enable.	0
		0	Auto Address Detect (AAD) is disabled.	
		1	Auto Address Detect (AAD) is enabled.	
3	SEL		Select direction control pin	0
		0	If direction control is enabled (bit DCTRL = 1), pin $\overline{RTS}$ is used for direction control.	
		1	If direction control is enabled (bit DCTRL = 1), pin $\overline{DTR}$ is used for direction control.	

All information provided in this document is subject to legal disclaimers.

© NXP B.V. 2012. All rights reserved.

Table 202. UART RS485 Control register (U0RS485CTRL - address 0x4000 804C) bit description *...continued*

Bit	Symbol	Value	Description	Reset value
4	DCTRL		Auto direction control enable.	0
		0	Disable Auto Direction Control.	
		1	Enable Auto Direction Control.	
5	OINV		Polarity control. This bit reverses the polarity of the direction control signal on the $\overline{RTS}$ (or $\overline{DTR}$) pin.	0
		0	The direction control pin will be driven to logic 0 when the transmitter has data to be sent. It will be driven to logic 1 after the last bit of data has been transmitted.	
		1	The direction control pin will be driven to logic 1 when the transmitter has data to be sent. It will be driven to logic 0 after the last bit of data has been transmitted.	
31:6	-	-	Reserved, user software should not write ones to reserved bits. The value read from a reserved bit is not defined.	NA

13.5.18 UART RS485 Address Match register (U0RS485ADRMATCH - 0x4000 8050)

The U0RS485ADRMATCH register contains the address match value for RS-485/EIA-485 mode.

Table 203. UART RS485 Address Match register (U0RS485ADRMATCH - address 0x4000 8050) bit description

Bit	Symbol	Description	Reset value
7:0	ADRMATCH	Contains the address match value.	0x00
31:8	-	Reserved	-

13.5.19 UART1 RS485 Delay value register (U0RS485DLY - 0x4000 8054)

The user may program the 8-bit RS485DLY register with a delay between the last stop bit leaving the TXFIFO and the de-assertion of $\overline{RTS}$ (or $\overline{DTR}$). This delay time is in periods of the baud clock. Any delay time from 0 to 255 bit times may be programmed.

Table 204. UART RS485 Delay value register (U0RS485DLY - address 0x4000 8054) bit description

Bit	Symbol	Description	Reset value
7:0	DLY	Contains the direction control (RTS or DTR) delay value. This register works in conjunction with an 8-bit counter.	0x00
31:8	-	Reserved, user software should not write ones to reserved bits. The value read from a reserved bit is not defined.	NA

13.5.20 RS-485/EIA-485 modes of operation

The RS-485/EIA-485 feature allows the UART to be configured as an addressable slave. The addressable slave is one of multiple slaves controlled by a single master.

All information provided in this document is subject to legal disclaimers.

© NXP B.V. 2012. All rights reserved.

The UART master transmitter will identify an address character by setting the parity (9th) bit to ‘1’. For data characters, the parity bit is set to ‘0’.

Each UART slave receiver can be assigned a unique address. The slave can be programmed to either manually or automatically reject data following an address which is not theirs.

RS-485/EIA-485 Normal Multidrop Mode (NMM)

Setting the RS485CTRL bit 0 enables this mode. In this mode, an address is detected when a received byte causes the UART to set the parity error and generate an interrupt.

If the receiver is disabled (RS485CTRL bit 1 = ‘1’), any received data bytes will be ignored and will not be stored in the RXFIFO. When an address byte is detected (parity bit = ‘1’) it will be placed into the RXFIFO and an Rx Data Ready Interrupt will be generated. The processor can then read the address byte and decide whether or not to enable the receiver to accept the following data.

While the receiver is enabled (RS485CTRL bit 1 =’0’), all received bytes will be accepted and stored in the RXFIFO regardless of whether they are data or address. When an address character is received a parity error interrupt will be generated and the processor can decide whether or not to disable the receiver.

RS-485/EIA-485 Auto Address Detection (AAD) mode

When both RS485CTRL register bits 0 (9-bit mode enable) and 2 (AAD mode enable) are set, the UART is in auto address detect mode.

In this mode, the receiver will compare any address byte received (parity = ‘1’) to the 8-bit value programmed into the RS485ADRMATCH register.

If the receiver is disabled (RS485CTRL bit 1 = ‘1’), any received byte will be discarded if it is either a data byte OR an address byte which fails to match the RS485ADRMATCH value.

When a matching address character is detected it will be pushed onto the RXFIFO along with the parity bit, and the receiver will be automatically enabled (RS485CTRL bit 1 will be cleared by hardware). The receiver will also generate an Rx Data Ready Interrupt.

While the receiver is enabled (RS485CTRL bit 1 = ‘0’), all bytes received will be accepted and stored in the RXFIFO until an address byte which does not match the RS485ADRMATCH value is received. When this occurs, the receiver will be automatically disabled in hardware (RS485CTRL bit 1 will be set), The received non-matching address character will not be stored in the RXFIFO.

RS-485/EIA-485 Auto Direction Control

RS485/EIA-485 mode includes the option of allowing the transmitter to automatically control the state of the DIR pin as a direction control output signal.

Setting RS485CTRL bit 4 = ‘1’ enables this feature.

Direction control, if enabled, will use the $\overline{\text{RTS}}$ pin when RS485CTRL bit 3 = ‘0’. It will use the $\overline{\text{DTR}}$ pin when RS485CTRL bit 3 = ‘1’.

All information provided in this document is subject to legal disclaimers.

© NXP B.V. 2012. All rights reserved.

When Auto Direction Control is enabled, the selected pin will be asserted (driven LOW) when the CPU writes data into the TXFIFO. The pin will be de-asserted (driven HIGH) once the last bit of data has been transmitted. See bits 4 and 5 in the RS485CTRL register.

The RS485CTRL bit 4 takes precedence over all other mechanisms controlling the direction control pin with the exception of loopback mode.

RS485/EIA-485 driver delay time

The driver delay time is the delay between the last stop bit leaving the TXFIFO and the de-assertion of $\overline{RTS}$. This delay time can be programmed in the 8-bit RS485DLY register. The delay time is in periods of the baud clock. Any delay time from 0 to 255 bit times may be used.

RS485/EIA-485 output inversion

The polarity of the direction control signal on the $\overline{RTS}$ (or $\overline{DTR}$) pins can be reversed by programming bit 5 in the U0RS485CTRL register. When this bit is set, the direction control pin will be driven to logic 1 when the transmitter has data waiting to be sent. The direction control pin will be driven to logic 0 after the last bit of data has been transmitted.

13.6 Architecture

The architecture of the UART is shown below in the block diagram.

The APB interface provides a communications link between the CPU or host and the UART.

The UART receiver block, U0RX, monitors the serial input line, RXD, for valid input. The UART RX Shift Register (U0RSR) accepts valid characters via RXD. After a valid character is assembled in the U0RSR, it is passed to the UART RX Buffer Register FIFO to await access by the CPU or host via the generic host interface.

The UART transmitter block, U0TX, accepts data written by the CPU or host and buffers the data in the UART TX Holding Register FIFO (U0THR). The UART TX Shift Register (U0TSR) reads the data stored in the U0THR and assembles the data to transmit via the serial output pin, TXD1.

The UART Baud Rate Generator block, U0BRG, generates the timing enables used by the UART TX block. The U0BRG clock input source is UART_PCLK. The main clock is divided down per the divisor specified in the U0DLL and U0DLM registers. This divided down clock is a 16x oversample clock, NBAUDOUT.

The interrupt interface contains registers U0IER and U0IIR. The interrupt interface receives several one clock wide enables from the U0TX and U0RX blocks.

Status information from the U0TX and U0RX is stored in the U0LSR. Control information for the U0TX and U0RX is stored in the U0LCR.

All information provided in this document is subject to legal disclaimers.

© NXP B.V. 2012. All rights reserved.

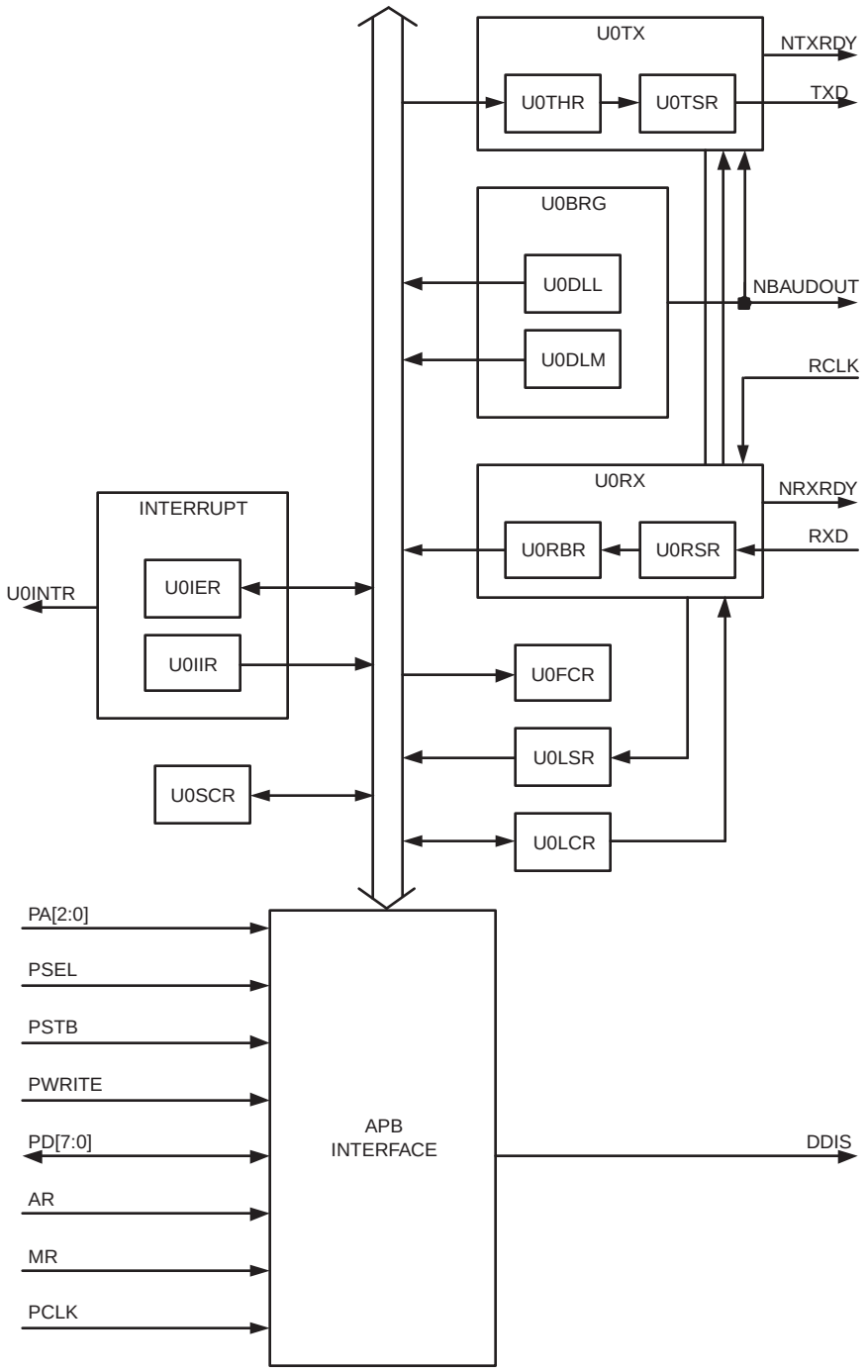

Fig 35. UART block diagram

All information provided in this document is subject to legal disclaimers.

© NXP B.V. 2012. All rights reserved.

14.1 How to read this chapter

The SPI blocks are identical for all LPC111x, LPC11D14, and LPC11Cxx parts. The second SPI block, SPI1, is available on LQFP48 packages.

For parts in the LPC1100 and LPC1100L series, SPI1 is not available on HVQFN33 packages.

For parts in the LPC1100XL series, SPI1 is supported on all packages.

Remark: Both SPI blocks include the full SSP feature set, and all register names use the SSP prefix.

14.2 Basic configuration

The SPI0/1 are configured using the following registers:

1. Pins: The SPI pins must be configured in the IOCONFIG register block. In addition, use the IOCON_LOC register (see Section 7.4) to select a location for the SCK0 function.
2. Power: In the SYSAHBCLKCTRL register, set bit 11 and bit 18 (Table 21).
3. Peripheral clock: Enable the SPI0/1 peripheral clock by writing to the SSP0/1CLKDIV registers (Section 3.5.15 and Section 3.5.17).
4. Reset: Before accessing the SPI blocks, ensure that the SSP_RST_N bits (bit 0 and bit 2) in the PRESETCTRL register (Table 9) is set to 1. This de-asserts the reset signal to the SPI blocks.

14.3 Features

- Compatible with Motorola SPI, 4-wire TI SSI, and National Semiconductor Microwire buses.
- Synchronous Serial Communication.
- Supports master or slave operation.
- Eight-frame FIFOs for both transmit and receive.
- 4-bit to 16-bit frame.

14.4 General description

The SPI/SSP is a Synchronous Serial Port (SSP) controller capable of operation on a SPI, 4-wire SSI, or Microwire bus. It can interact with multiple masters and slaves on the bus. Only a single master and a single slave can communicate on the bus during a given data transfer. Data transfers are in principle full duplex, with frames of 4 bits to 16 bits of data flowing from the master to the slave and from the slave to the master. In practice it is often the case that only one of these data flows carries meaningful data.

All information provided in this document is subject to legal disclaimers.
© NXP B.V. 2012. All rights reserved.

The LPC111x/LPC11Cxx has two SPI/Synchronous Serial Port controllers.

14.5 Pin description

Table 205. SPI pin descriptions

Pin name	Type	Interface pin name/function			Pin description
		SPI	SSI	Microwire	
SCK0/1	I/O	SCK	CLK	SK	**Serial Clock.** SCK/CLK/SK is a clock signal used to synchronize the transfer of data. It is driven by the master and received by the slave. When SPI/SSP interface is used, the clock is programmable to be active-high or active-low, otherwise it is always active-high. SCK only switches during a data transfer. Any other time, the SPI/SSP interface either holds it in its inactive state or does not drive it (leaves it in high-impedance state).
SSEL0/1	I/O	SSEL	FS	CS	**Frame Sync/Slave Select.** When the SPI/SSP interface is a bus master, it drives this signal to an active state before the start of serial data and then releases it to an inactive state after the data has been sent.The active state of this signal can be high or low depending upon the selected bus and mode. When the SPI/SSP interface is a bus slave, this signal qualifies the presence of data from the Master according to the protocol in use. When there is just one bus master and one bus slave, the Frame Sync or Slave Select signal from the Master can be connected directly to the slave's corresponding input. When there is more than one slave on the bus, further qualification of their Frame Select/Slave Select inputs will typically be necessary to prevent more than one slave from responding to a transfer.
MISO0/1	I/O	MISO	DR(M) DX(S)	SI(M) SO(S)	**Master In Slave Out.** The MISO signal transfers serial data from the slave to the master. When the SPI/SSP is a slave, serial data is output on this signal. When the SPI/SSP is a master, it clocks in serial data from this signal. When the SPI/SSP is a slave and is not selected by FS/SSEL, it does not drive this signal (leaves it in high-impedance state).
MOSI0/1	I/O	MOSI	DX(M) DR(S)	SO(M) SI(S)	**Master Out Slave In.** The MOSI signal transfers serial data from the master to the slave. When the SPI/SSP is a master, it outputs serial data on this signal. When the SPI/SSP is a slave, it clocks in serial data from this signal.

Remark: The SCK0 function is multiplexed to three different pin locations (two locations on the HVQFN package). Use the IOCON_LOC register (see Section 7.4) to select a physical location for the SCK0 function in addition to selecting the function in the IOCON registers. The SCK1 pin is not multiplexed.

All information provided in this document is subject to legal disclaimers.

© NXP B.V. 2012. All rights reserved.

14.6 Register description

The register addresses of the SPI controllers are shown in Table 206 and Table 207.

The reset value reflects the data stored in used bits only. It does not include the content of reserved bits.

Remark: Register names use the SSP prefix to indicate that the SPI controllers have full SSP capabilities.

Table 206. Register overview: SPI0 (base address 0x4004 0000)

Name	Access	Address offset	Description	Reset value
SSP0CR0	R/W	0x000	Control Register 0. Selects the serial clock rate, bus type, and data size.	0
SSP0CR1	R/W	0x004	Control Register 1. Selects master/slave and other modes.	0
SSP0DR	R/W	0x008	Data Register. Writes fill the transmit FIFO, and reads empty the receive FIFO.	0
SSP0SR	RO	0x00C	Status Register	0x0000 0003
SSP0CPSR	R/W	0x010	Clock Prescale Register	0
SSP0IMSC	R/W	0x014	Interrupt Mask Set and Clear Register	0
SSP0RIS	RO	0x018	Raw Interrupt Status Register	0x0000 0008
SSP0MIS	RO	0x01C	Masked Interrupt Status Register	0
SSP0ICR	WO	0x020	SSPICR Interrupt Clear Register	NA

Table 207. Register overview: SPI1 (base address 0x4005 8000)

Name	Access	Address offset	Description	Reset value
SSP1CR0	R/W	0x000	Control Register 0. Selects the serial clock rate, bus type, and data size.	0
SSP1CR1	R/W	0x004	Control Register 1. Selects master/slave and other modes.	0
SSP1DR	R/W	0x008	Data Register. Writes fill the transmit FIFO, and reads empty the receive FIFO.	0
SSP1SR	RO	0x00C	Status Register	0x0000 0003
SSP1CPSR	R/W	0x010	Clock Prescale Register	0
SSP1IMSC	R/W	0x014	Interrupt Mask Set and Clear Register	0
SSP1RIS	RO	0x018	Raw Interrupt Status Register	0x0000 0008
SSP1MIS	RO	0x01C	Masked Interrupt Status Register	0
SSP1ICR	WO	0x020	SSPICR Interrupt Clear Register	NA

14.6.1 SPI/SSP Control Register 0

This register controls the basic operation of the SPI/SSP controller.

All information provided in this document is subject to legal disclaimers.
© NXP B.V. 2012. All rights reserved.

Table 208: SPI/SSP Control Register 0 (SSP0CR0 - address 0x4004 0000, SSP1CR0 - address 0x4005 8000) bit description

Bit	Symbol	Value	Description	Reset Value
3:0	DSS		Data Size Select. This field controls the number of bits transferred in each frame. Values 0000-0010 are not supported and should not be used.	0000
		0x3	4-bit transfer	
		0x4	5-bit transfer	
		0x5	6-bit transfer	
		0x6	7-bit transfer	
		0x7	8-bit transfer	
		0x8	9-bit transfer	
		0x9	10-bit transfer	
		0xA	11-bit transfer	
		0xB	12-bit transfer	
		0xC	13-bit transfer	
		0xD	14-bit transfer	
		0xE	15-bit transfer	
		0xF	16-bit transfer	
5:4	FRF		Frame Format.	00
		0x0	SPI	
		0x1	TI	
		0x2	Microwire	
		0x3	This combination is not supported and should not be used.	
6	CPOL		Clock Out Polarity. This bit is only used in SPI mode.	0
		0	SPI controller maintains the bus clock low between frames.	
		1	SPI controller maintains the bus clock high between frames.	
7	CPHA		Clock Out Phase. This bit is only used in SPI mode.	0
		0	SPI controller captures serial data on the first clock transition of the frame, that is, the transition **away from** the inter-frame state of the clock line.	
		1	SPI controller captures serial data on the second clock transition of the frame, that is, the transition **back to** the inter-frame state of the clock line.	
15:8	SCR		Serial Clock Rate. The number of prescaler output clocks per bit on the bus, minus one. Given that CPSDVSR is the prescale divider, and the APB clock PCLK clocks the prescaler, the bit frequency is PCLK / (CPSDVSR × [SCR+1]).	0x00
31:16	-	-	Reserved	-

14.6.2 SPI/SSP0 Control Register 1

This register controls certain aspects of the operation of the SPI/SSP controller.

All information provided in this document is subject to legal disclaimers.

© NXP B.V. 2012. All rights reserved.

Table 209: SPI/SSP Control Register 1 (SSP0CR1 - address 0x4004 0004, SSP1CR1 - address 0x4005 8004) bit description

Bit	Symbol	Value	Description	Reset Value
0	LBM		Loop Back Mode.	0
		0	During normal operation.	
		1	Serial input is taken from the serial output (MOSI or MISO) rather than the serial input pin (MISO or MOSI respectively).	
1	SSE		SPI Enable.	0
		0	The SPI controller is disabled.	
		1	The SPI controller will interact with other devices on the serial bus. Software should write the appropriate control information to the other SPI/SSP registers and interrupt controller registers, before setting this bit.	
2	MS		Master/Slave Mode.This bit can only be written when the SSE bit is 0.	0
		0	The SPI controller acts as a master on the bus, driving the SCLK, MOSI, and SSEL lines and receiving the MISO line.	
		1	The SPI controller acts as a slave on the bus, driving MISO line and receiving SCLK, MOSI, and SSEL lines.	
3	SOD		Slave Output Disable. This bit is relevant only in slave mode (MS = 1). If it is 1, this blocks this SPI controller from driving the transmit data line (MISO).	0
31:4	-		Reserved, user software should not write ones to reserved bits. The value read from a reserved bit is not defined.	NA

14.6.3 SPI/SSP Data Register

Software can write data to be transmitted to this register and read data that has been received.

Table 210: SPI/SSP Data Register (SSP0DR - address 0x4004 0008, SSP1DR - address 0x4005 8008) bit description

Bit	Symbol	Description	Reset Value
15:0	DATA	**Write:** software can write data to be sent in a future frame to this register whenever the TNF bit in the Status register is 1, indicating that the Tx FIFO is not full. If the Tx FIFO was previously empty and the SPI controller is not busy on the bus, transmission of the data will begin immediately. Otherwise the data written to this register will be sent as soon as all previous data has been sent (and received). If the data length is less than 16 bit, software must right-justify the data written to this register. **Read:** software can read data from this register whenever the RNE bit in the Status register is 1, indicating that the Rx FIFO is not empty. When software reads this register, the SPI controller returns data from the least recent frame in the Rx FIFO. If the data length is less than 16 bit, the data is right-justified in this field with higher order bits filled with 0s.	0x0000
31:16	-	Reserved.	-

All information provided in this document is subject to legal disclaimers.

© NXP B.V. 2012. All rights reserved.

14.6.4 SPI/SSP Status Register

This read-only register reflects the current status of the SPI controller.

Table 211: SPI/SSP Status Register (SSP0SR - address 0x4004 000C, SSP1SR - address 0x4005 800C) bit description

Bit	Symbol	Description	Reset Value
0	TFE	Transmit FIFO Empty. This bit is 1 is the Transmit FIFO is empty, 0 if not.	1
1	TNF	Transmit FIFO Not Full. This bit is 0 if the Tx FIFO is full, 1 if not.	1
2	RNE	Receive FIFO Not Empty. This bit is 0 if the Receive FIFO is empty, 1 if not.	0
3	RFF	Receive FIFO Full. This bit is 1 if the Receive FIFO is full, 0 if not.	0
4	BSY	Busy. This bit is 0 if the SPI controller is idle, 1 if it is currently sending/receiving a frame and/or the Tx FIFO is not empty.	0
31:5	-	Reserved, user software should not write ones to reserved bits. The value read from a reserved bit is not defined.	NA

14.6.5 SPI/SSP Clock Prescale Register

This register controls the factor by which the Prescaler divides the SPI peripheral clock SPI_PCLK to yield the prescaler clock that is, in turn, divided by the SCR factor in the SSPCR0 registers, to determine the bit clock.

Table 212: SPI/SSP Clock Prescale Register (SSP0CPSR - address 0x4004 0010, SSP1CPSR - address 0x4005 8010) bit description

Bit	Symbol	Description	Reset Value
7:0	CPSDVSR	This even value between 2 and 254, by which SPI_PCLK is divided to yield the prescaler output clock. Bit 0 always reads as 0.	0
31:8	-	Reserved.	-

Important: the SSPnCPSR value must be properly initialized, or the SPI controller will not be able to transmit data correctly.

In Slave mode, the SPI clock rate provided by the master must not exceed 1/12 of the SPI peripheral clock selected in Section 3.5.15. The content of the SSPnCPSR register is not relevant.

In master mode, $CPSDVSR_{min}$ = 2 or larger (even numbers only).

14.6.6 SPI/SSP Interrupt Mask Set/Clear Register

This register controls whether each of the four possible interrupt conditions in the SPI controller are enabled. Note that ARM uses the word “masked” in the opposite sense from classic computer terminology, in which “masked” meant “disabled”. ARM uses the word “masked” to mean “enabled”. To avoid confusion we will not use the word “masked”.

All information provided in this document is subject to legal disclaimers.
© NXP B.V. 2012. All rights reserved.

Table 213: SPI/SSP Interrupt Mask Set/Clear register (SSP0IMSC - address 0x4004 0014, SSP1IMSC - address 0x4005 8014) bit description

Bit	Symbol	Description	Reset Value
0	RORIM	Software should set this bit to enable interrupt when a Receive Overrun occurs, that is, when the Rx FIFO is full and another frame is completely received. The ARM spec implies that the preceding frame data is overwritten by the new frame data when this occurs.	0
1	RTIM	Software should set this bit to enable interrupt when a Receive Time-out condition occurs. A Receive Time-out occurs when the Rx FIFO is not empty, and no has not been read for a time-out period. The time-out period is the same for master and slave modes and is determined by the SSP bit rate: 32 bits at PCLK / (CPSDVSR × [SCR+1]).	0
2	RXIM	Software should set this bit to enable interrupt when the Rx FIFO is at least half full.	0
3	TXIM	Software should set this bit to enable interrupt when the Tx FIFO is at least half empty.	0
31:4	-	Reserved, user software should not write ones to reserved bits. The value read from a reserved bit is not defined.	NA

14.6.7 SPI/SSP Raw Interrupt Status Register

This read-only register contains a 1 for each interrupt condition that is asserted, regardless of whether or not the interrupt is enabled in the SSPIMSC registers.

Table 214: SPI/SSP Raw Interrupt Status register (SSP0RIS - address 0x4004 0018, SSP1RIS - address 0x4005 8018) bit description

Bit	Symbol	Description	Reset Value
0	RORRIS	This bit is 1 if another frame was completely received while the RxFIFO was full. The ARM spec implies that the preceding frame data is overwritten by the new frame data when this occurs.	0
1	RTRIS	This bit is 1 if the Rx FIFO is not empty, and has not been read for a time-out period. The time-out period is the same for master and slave modes and is determined by the SSP bit rate: 32 bits at PCLK / (CPSDVSR × [SCR+1]).	0
2	RXRIS	This bit is 1 if the Rx FIFO is at least half full.	0
3	TXRIS	This bit is 1 if the Tx FIFO is at least half empty.	1
31:4	-	Reserved, user software should not write ones to reserved bits. The value read from a reserved bit is not defined.	NA

14.6.8 SPI/SSP Masked Interrupt Status Register

This read-only register contains a 1 for each interrupt condition that is asserted and enabled in the SSPIMSC registers. When an SPI interrupt occurs, the interrupt service routine should read this register to determine the cause(s) of the interrupt.

All information provided in this document is subject to legal disclaimers.

© NXP B.V. 2012. All rights reserved.

Table 215: SPI/SSP Masked Interrupt Status register (SSP0MIS - address 0x4004 001C, SSP1MIS - address 0x4005 801C) bit description

Bit	Symbol	Description	Reset Value
0	RORMIS	This bit is 1 if another frame was completely received while the RxFIFO was full, and this interrupt is enabled.	0
1	RTMIS	This bit is 1 if the Rx FIFO is not empty, has not been read for a time-out period, and this interrupt is enabled. The time-out period is the same for master and slave modes and is determined by the SSP bit rate: 32 bits at PCLK / (CPSDVSR × [SCR+1]).	0
2	RXMIS	This bit is 1 if the Rx FIFO is at least half full, and this interrupt is enabled.	0
3	TXMIS	This bit is 1 if the Tx FIFO is at least half empty, and this interrupt is enabled.	0
31:4	-	Reserved, user software should not write ones to reserved bits. The value read from a reserved bit is not defined.	NA

14.6.9 SPI/SSP Interrupt Clear Register

Software can write one or more one(s) to this write-only register, to clear the corresponding interrupt condition(s) in the SPI controller. Note that the other two interrupt conditions can be cleared by writing or reading the appropriate FIFO or disabled by clearing the corresponding bit in SSPIMSC registers.

Table 216: SPI/SSP interrupt Clear Register (SSP0ICR - address 0x4004 0020, SSP1ICR - address 0x4005 8020) bit description

Bit	Symbol	Description	Reset Value
0	RORIC	Writing a 1 to this bit clears the “frame was received when RxFIFO was full” interrupt.	NA
1	RTIC	Writing a 1 to this bit clears the Rx FIFO was not empty and has not been read for a timeout period interrupt. The timeout period is the same for master and slave modes and is determined by the SSP bit rate: 32 bits at PCLK / (CPSDVSR × [SCR+1]).	NA
31:2	-	Reserved, user software should not write ones to reserved bits. The value read from a reserved bit is not defined.	NA

14.7 Functional description

14.7.1 Texas Instruments synchronous serial frame format

Figure 36 shows the 4-wire Texas Instruments synchronous serial frame format supported by the SPI module.

All information provided in this document is subject to legal disclaimers.
© NXP B.V. 2012. All rights reserved.

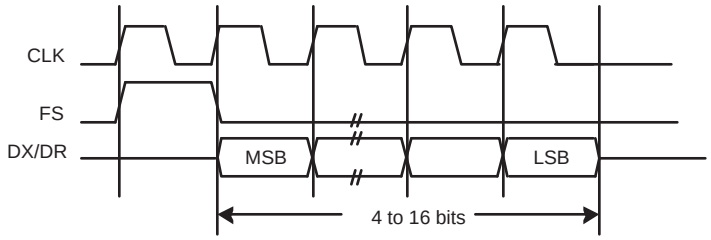

a. Single frame transfer

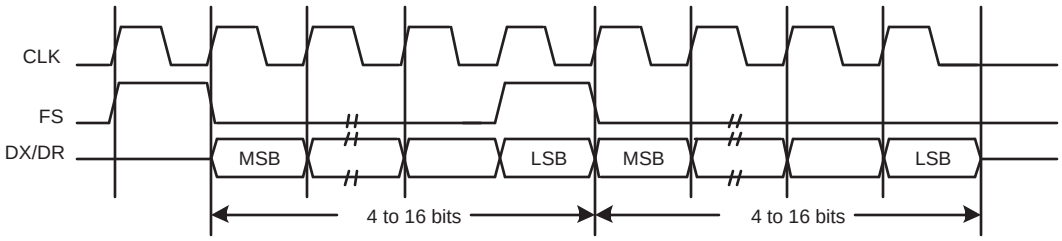

b. Continuous/back-to-back frames transfer

Fig 36. Texas Instruments Synchronous Serial Frame Format: a) Single and b) Continuous/back-to-back Two Frames Transfer

For device configured as a master in this mode, CLK and FS are forced LOW, and the transmit data line DX is in 3-state mode whenever the SSP is idle. Once the bottom entry of the transmit FIFO contains data, FS is pulsed HIGH for one CLK period. The value to be transmitted is also transferred from the transmit FIFO to the serial shift register of the transmit logic. On the next rising edge of CLK, the MSB of the 4-bit to 16-bit data frame is shifted out on the DX pin. Likewise, the MSB of the received data is shifted onto the DR pin by the off-chip serial slave device.

Both the SSP and the off-chip serial slave device then clock each data bit into their serial shifter on the falling edge of each CLK. The received data is transferred from the serial shifter to the receive FIFO on the first rising edge of CLK after the LSB has been latched.

14.7.2 SPI frame format

The SPI interface is a four-wire interface where the SSEL signal behaves as a slave select. The main feature of the SPI format is that the inactive state and phase of the SCK signal are programmable through the CPOL and CPHA bits within the SSPCR0 control register.

14.7.2.1 Clock Polarity (CPOL) and Phase (CPHA) control

When the CPOL clock polarity control bit is LOW, it produces a steady state low value on the SCK pin. If the CPOL clock polarity control bit is HIGH, a steady state high value is placed on the CLK pin when data is not being transferred.

All information provided in this document is subject to legal disclaimers.
© NXP B.V. 2012. All rights reserved.

The CPHA control bit selects the clock edge that captures data and allows it to change state. It has the most impact on the first bit transmitted by either allowing or not allowing a clock transition before the first data capture edge. When the CPHA phase control bit is LOW, data is captured on the first clock edge transition. If the CPHA clock phase control bit is HIGH, data is captured on the second clock edge transition.

14.7.2.2 SPI format with CPOL=0,CPHA=0

Single and continuous transmission signal sequences for SPI format with CPOL = 0, CPHA = 0 are shown in Figure 37.

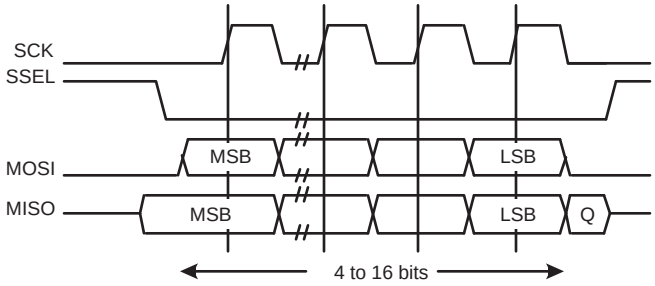

a. Single transfer with CPOL=0 and CPHA=0

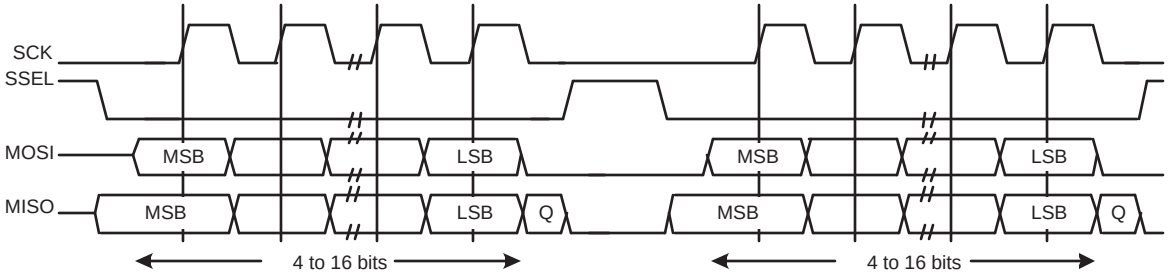

b. Continuous transfer with CPOL=0 and CPHA=0

Fig 37. SPI frame format with CPOL=0 and CPHA=0 (a) Single and b) Continuous Transfer)

In this configuration, during idle periods:

- The CLK signal is forced LOW.
- SSEL is forced HIGH.
- The transmit MOSI/MISO pad is in high impedance.

If the SPI/SSP is enabled and there is valid data within the transmit FIFO, the start of transmission is signified by the SSEL master signal being driven LOW. This causes slave data to be enabled onto the MISO input line of the master. Master's MOSI is enabled.

One half SCK period later, valid master data is transferred to the MOSI pin. Now that both the master and slave data have been set, the SCK master clock pin goes HIGH after one further half SCK period.

The data is captured on the rising and propagated on the falling edges of the SCK signal.

All information provided in this document is subject to legal disclaimers.

© NXP B.V. 2012. All rights reserved.

In the case of a single word transmission, after all bits of the data word have been transferred, the SSEL line is returned to its idle HIGH state one SCK period after the last bit has been captured.

However, in the case of continuous back-to-back transmissions, the SSEL signal must be pulsed HIGH between each data word transfer. This is because the slave select pin freezes the data in its serial peripheral register and does not allow it to be altered if the CPHA bit is logic zero. Therefore the master device must raise the SSEL pin of the slave device between each data transfer to enable the serial peripheral data write. On completion of the continuous transfer, the SSEL pin is returned to its idle state one SCK period after the last bit has been captured.

14.7.2.3 SPI format with CPOL=0,CPHA=1

The transfer signal sequence for SPI format with CPOL = 0, CPHA = 1 is shown in Figure 38, which covers both single and continuous transfers.

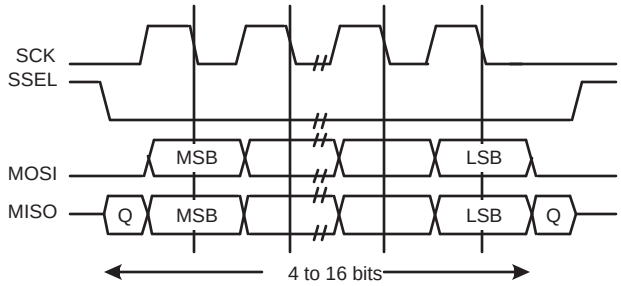

Fig 38. SPI frame format with CPOL=0 and CPHA=1

In this configuration, during idle periods:

- The CLK signal is forced LOW.
- SSEL is forced HIGH.
- The transmit MOSI/MISO pad is in high impedance.

If the SPI/SSP is enabled and there is valid data within the transmit FIFO, the start of transmission is signified by the SSEL master signal being driven LOW. Master's MOSI pin is enabled. After a further one half SCK period, both master and slave valid data is enabled onto their respective transmission lines. At the same time, the SCK is enabled with a rising edge transition.

Data is then captured on the falling edges and propagated on the rising edges of the SCK signal.

In the case of a single word transfer, after all bits have been transferred, the SSEL line is returned to its idle HIGH state one SCK period after the last bit has been captured.

For continuous back-to-back transfers, the SSEL pin is held LOW between successive data words and termination is the same as that of the single word transfer.

14.7.2.4 SPI format with CPOL = 1,CPHA = 0

Single and continuous transmission signal sequences for SPI format with CPOL=1, CPHA=0 are shown in Figure 39.

All information provided in this document is subject to legal disclaimers.

© NXP B.V. 2012. All rights reserved.

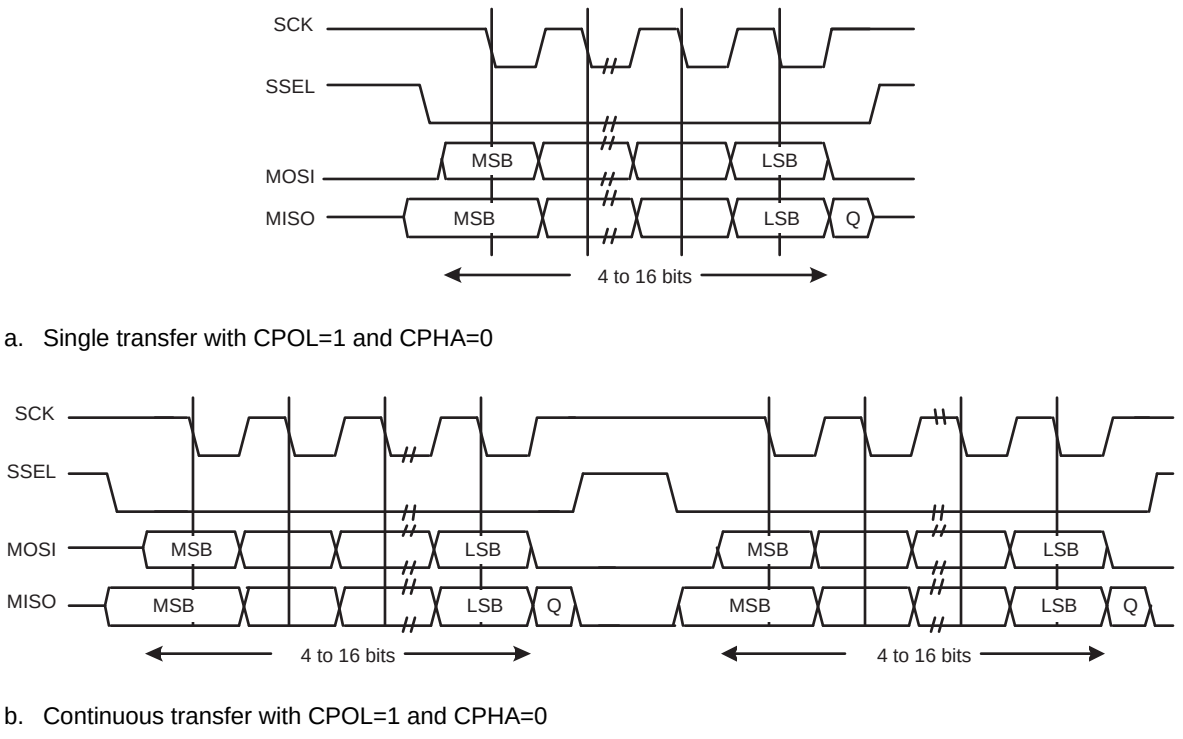

Fig 39. SPI frame format with CPOL = 1 and CPHA = 0 (a) Single and b) Continuous Transfer)

In this configuration, during idle periods:

- The CLK signal is forced HIGH.
- SSEL is forced HIGH.
- The transmit MOSI/MISO pad is in high impedance.

If the SPI/SSP is enabled and there is valid data within the transmit FIFO, the start of transmission is signified by the SSEL master signal being driven LOW, which causes slave data to be immediately transferred onto the MISO line of the master. Master's MOSI pin is enabled.

One half period later, valid master data is transferred to the MOSI line. Now that both the master and slave data have been set, the SCK master clock pin becomes LOW after one further half SCK period. This means that data is captured on the falling edges and be propagated on the rising edges of the SCK signal.

In the case of a single word transmission, after all bits of the data word are transferred, the SSEL line is returned to its idle HIGH state one SCK period after the last bit has been captured.

However, in the case of continuous back-to-back transmissions, the SSEL signal must be pulsed HIGH between each data word transfer. This is because the slave select pin freezes the data in its serial peripheral register and does not allow it to be altered if the CPHA bit is logic zero. Therefore the master device must raise the SSEL pin of the slave device between each data transfer to enable the serial peripheral data write. On completion of the continuous transfer, the SSEL pin is returned to its idle state one SCK period after the last bit has been captured.

All information provided in this document is subject to legal disclaimers.

© NXP B.V. 2012. All rights reserved.

14.7.2.5 SPI format with CPOL = 1,CPHA = 1

The transfer signal sequence for SPI format with CPOL = 1, CPHA = 1 is shown in Figure 40, which covers both single and continuous transfers.

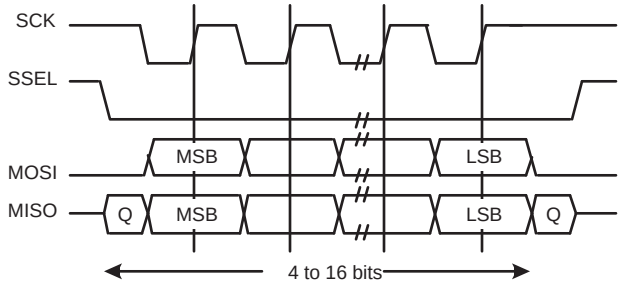

Fig 40. SPI Frame Format with CPOL = 1 and CPHA = 1

In this configuration, during idle periods:

- The CLK signal is forced HIGH.
- SSEL is forced HIGH.
- The transmit MOSI/MISO pad is in high impedance.

If the SPI/SSP is enabled and there is valid data within the transmit FIFO, the start of transmission is signified by the SSEL master signal being driven LOW. Master's MOSI is enabled. After a further one half SCK period, both master and slave data are enabled onto their respective transmission lines. At the same time, the SCK is enabled with a falling edge transition. Data is then captured on the rising edges and propagated on the falling edges of the SCK signal.

After all bits have been transferred, in the case of a single word transmission, the SSEL line is returned to its idle HIGH state one SCK period after the last bit has been captured. For continuous back-to-back transmissions, the SSEL pins remains in its active LOW state, until the final bit of the last word has been captured, and then returns to its idle state as described above. In general, for continuous back-to-back transfers the SSEL pin is held LOW between successive data words and termination is the same as that of the single word transfer.

14.7.3 Semiconductor Microwire frame format

Figure 41 shows the Microwire frame format for a single frame. Figure 42 shows the same format when back-to-back frames are transmitted.

All information provided in this document is subject to legal disclaimers.

© NXP B.V. 2012. All rights reserved.

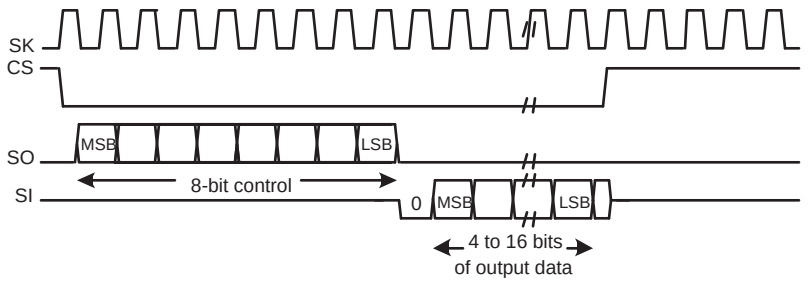

Fig 41. Microwire frame format (single transfer)

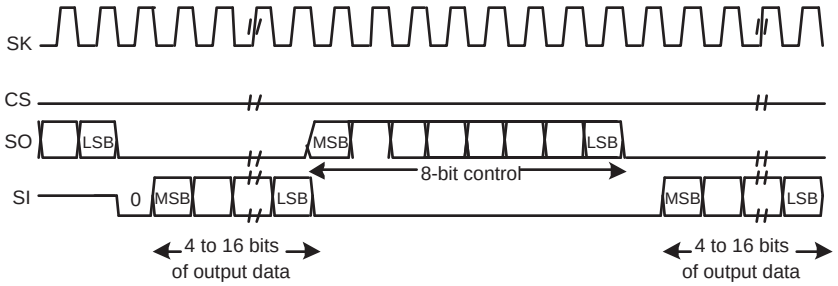

Fig 42. Microwire frame format (continuous transfers)

Microwire format is very similar to SPI format, except that transmission is half-duplex instead of full-duplex, using a master-slave message passing technique. Each serial transmission begins with an 8-bit control word that is transmitted from the SPI/SSP to the off-chip slave device. During this transmission, no incoming data is received by the SPI/SSP. After the message has been sent, the off-chip slave decodes it and, after waiting one serial clock after the last bit of the 8-bit control message has been sent, responds with the required data. The returned data is 4 to 16 bit in length, making the total frame length anywhere from 13 to 25 bits.

In this configuration, during idle periods:

- The SK signal is forced LOW.
- CS is forced HIGH.
- The transmit data line SO is arbitrarily forced LOW.

A transmission is triggered by writing a control byte to the transmit FIFO.The falling edge of CS causes the value contained in the bottom entry of the transmit FIFO to be transferred to the serial shift register of the transmit logic, and the MSB of the 8-bit control frame to be shifted out onto the SO pin. CS remains LOW for the duration of the frame transmission. The SI pin remains tristated during this transmission.

The off-chip serial slave device latches each control bit into its serial shifter on the rising edge of each SK. After the last bit is latched by the slave device, the control byte is decoded during a one clock wait-state, and the slave responds by transmitting data back to the SPI/SSP. Each bit is driven onto SI line on the falling edge of SK. The SPI/SSP in

All information provided in this document is subject to legal disclaimers.

© NXP B.V. 2012. All rights reserved.

turn latches each bit on the rising edge of SK. At the end of the frame, for single transfers, the CS signal is pulled HIGH one clock period after the last bit has been latched in the receive serial shifter, that causes the data to be transferred to the receive FIFO.

Note: The off-chip slave device can tristate the receive line either on the falling edge of SK after the LSB has been latched by the receive shiftier, or when the CS pin goes HIGH.

For continuous transfers, data transmission begins and ends in the same manner as a single transfer. However, the CS line is continuously asserted (held LOW) and transmission of data occurs back to back. The control byte of the next frame follows directly after the LSB of the received data from the current frame. Each of the received values is transferred from the receive shifter on the falling edge SK, after the LSB of the frame has been latched into the SPI/SSP.

14.7.3.1 Setup and hold time requirements on CS with respect to SK in Microwire mode

In the Microwire mode, the SPI/SSP slave samples the first bit of receive data on the rising edge of SK after CS has gone LOW. Masters that drive a free-running SK must ensure that the CS signal has sufficient setup and hold margins with respect to the rising edge of SK.

Figure 43 illustrates these setup and hold time requirements. With respect to the SK rising edge on which the first bit of receive data is to be sampled by the SPI/SSP slave, CS must have a setup of at least two times the period of SK on which the SPI/SSP operates. With respect to the SK rising edge previous to this edge, CS must have a hold of at least one SK period.

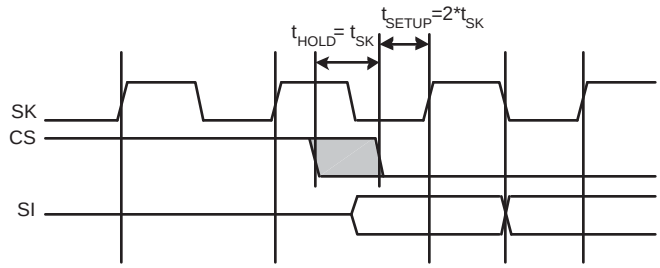

Fig 43. Microwire frame format setup and hold details

All information provided in this document is subject to legal disclaimers.

© NXP B.V. 2012. All rights reserved.

15.1 How to read this chapter

The I^{2}C-bus block is identical for all LPC111x, LPC11D14, and LPC11Cxx parts.

The I2C-bus is interface is not available on part LPC1112FDH20/102.

15.2 Basic configuration

The I^{2}C-bus interface is configured using the following registers:

1. Pins: The I2C pin functions and the I2C mode are configured in the IOCONFIG register block (Section 7.4, Table 67 and Table 68).
2. Power and peripheral clock: In the SYSAHBCLKCTRL register, set bit 5 (Table 21).
3. Reset: Before accessing the I2C block, ensure that the I2C_RST_N bit (bit 1) in the PRESETCTRL register (Table 9) is set to 1. This de-asserts the reset signal to the I2C block.

15.3 Features

- Standard I^{2}C-compliant bus interfaces may be configured as Master, Slave, or Master/Slave.
- Arbitration is handled between simultaneously transmitting masters without corruption of serial data on the bus.
- Programmable clock allows adjustment of I^{2}C transfer rates.
- Data transfer is bidirectional between masters and slaves.
- Serial clock synchronization allows devices with different bit rates to communicate via one serial bus.
- Serial clock synchronization is used as a handshake mechanism to suspend and resume serial transfer.
- Supports Fast-mode Plus.
- Optional recognition of up to four distinct slave addresses.
- Monitor mode allows observing all I^{2}C-bus traffic, regardless of slave address.
- I^{2}C-bus can be used for test and diagnostic purposes.
- The I^{2}C-bus contains a standard I^{2}C-compliant bus interface with two pins.

15.4 Applications

Interfaces to external I^{2}C standard parts, such as serial RAMs, LCDs, tone generators, other microcontrollers, etc.

All information provided in this document is subject to legal disclaimers.
© NXP B.V. 2012. All rights reserved.

15.5 General description

A typical I²C-bus configuration is shown in Figure 44. Depending on the state of the direction bit (R/W), two types of data transfers are possible on the I²C-bus:

- Data transfer from a master transmitter to a slave receiver. The first byte transmitted by the master is the slave address. Next follows a number of data bytes. The slave returns an acknowledge bit after each received byte.
- Data transfer from a slave transmitter to a master receiver. The first byte (the slave address) is transmitted by the master. The slave then returns an acknowledge bit. Next follows the data bytes transmitted by the slave to the master. The master returns an acknowledge bit after all received bytes other than the last byte. At the end of the last received byte, a “not acknowledge” is returned. The master device generates all of the serial clock pulses and the START and STOP conditions. A transfer is ended with a STOP condition or with a Repeated START condition. Since a Repeated START condition is also the beginning of the next serial transfer, the I²C bus will not be released.

The I²C interface is byte oriented and has four operating modes: master transmitter mode, master receiver mode, slave transmitter mode and slave receiver mode.

The I²C interface complies with the entire I²C specification, supporting the ability to turn power off to the ARM Cortex-M0 without interfering with other devices on the same I²C-bus.

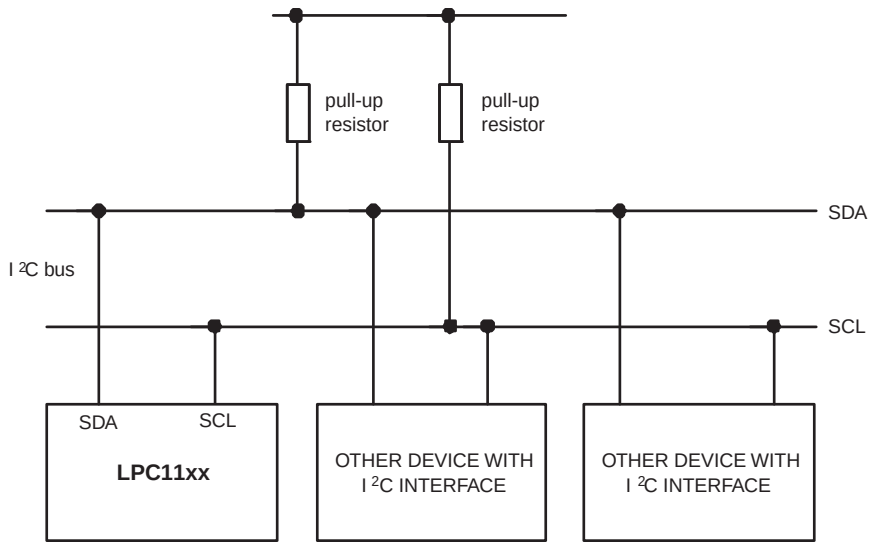

Fig 44. I²C-bus configuration

15.5.1 I²C Fast-mode Plus

Fast-Mode Plus supports a 1 Mbit/sec transfer rate to communicate with the I²C-bus products which NXP Semiconductors is now providing.

All information provided in this document is subject to legal disclaimers.

© NXP B.V. 2012. All rights reserved.

15.6 Pin description

Table 217. I²C-bus pin description

Pin	Type	Description
SDA	Input/Output	I²C Serial Data
SCL	Input/Output	I²C Serial Clock

The I²C-bus pins must be configured through the IOCON_PIO0_4 (Table 67) and IOCON_PIO0_5 (Table 68) registers for Standard/ Fast-mode or Fast-mode Plus. In Fast-mode Plus, rates above 400 kHz and up to 1 MHz may be selected. The I²C-bus pins are open-drain outputs and fully compatible with the I²C-bus specification.

15.7 Register description

Table 218. Register overview: I²C (base address 0x4000 0000)

Name	Access	Address offset	Description	Reset value[1]
I2C0CONSET	R/W	0x000	**I2C Control Set Register.** When a one is written to a bit of this register, the corresponding bit in the I²C control register is set. Writing a zero has no effect on the corresponding bit in the I²C control register.	0x00
I2C0STAT	RO	0x004	**I2C Status Register.** During I²C operation, this register provides detailed status codes that allow software to determine the next action needed.	0xF8
I2C0DAT	R/W	0x008	**I2C Data Register.** During master or slave transmit mode, data to be transmitted is written to this register. During master or slave receive mode, data that has been received may be read from this register.	0x00
I2C0ADR0	R/W	0x00C	**I2C Slave Address Register 0.** Contains the 7-bit slave address for operation of the I²C interface in slave mode, and is not used in master mode. The least significant bit determines whether a slave responds to the General Call address.	0x00
I2C0SCLH	R/W	0x010	**SCH Duty Cycle Register High Half Word.** Determines the high time of the I²C clock.	0x04
I2C0SCLL	R/W	0x014	**SCL Duty Cycle Register Low Half Word.** Determines the low time of the I²C clock. I2nSCLL and I2nSCLH together determine the clock frequency generated by an I²C master and certain times used in slave mode.	0x04
I2C0CONCLR	WO	0x018	**I2C Control Clear Register.** When a one is written to a bit of this register, the corresponding bit in the I²C control register is cleared. Writing a zero has no effect on the corresponding bit in the I²C control register.	NA
I2C0MMCTRL	R/W	0x01C	**Monitor mode control register.**	0x00
I2C0ADR1	R/W	0x020	**I2C Slave Address Register 1.** Contains the 7-bit slave address for operation of the I²C interface in slave mode, and is not used in master mode. The least significant bit determines whether a slave responds to the General Call address.	0x00
I2C0ADR2	R/W	0x024	**I2C Slave Address Register 2.** Contains the 7-bit slave address for operation of the I²C interface in slave mode, and is not used in master mode. The least significant bit determines whether a slave responds to the General Call address.	0x00

All information provided in this document is subject to legal disclaimers.

© NXP B.V. 2012. All rights reserved.

Table 218. Register overview: I²C (base address 0x4000 0000) *...continued*

Name	Access	Address offset	Description	Reset value[1]
I2C0ADR3	R/W	0x028	**I2C Slave Address Register 3.** Contains the 7-bit slave address for operation of the I²C interface in slave mode, and is not used in master mode. The least significant bit determines whether a slave responds to the General Call address.	0x00
I2C0DATA_BUFFER	RO	0x02C	**Data buffer register.** The contents of the 8 MSBs of the I2DAT shift register will be transferred to the DATA_BUFFER automatically after every nine bits (8 bits of data plus ACK or NACK) has been received on the bus.	0x00
I2C0MASK0	R/W	0x030	**I2C Slave address mask register 0**. This mask register is associated with I2ADR0 to determine an address match. The mask register has no effect when comparing to the General Call address ('0000000').	0x00
I2C0MASK1	R/W	0x034	**I2C Slave address mask register 1**. This mask register is associated with I2ADR1 to determine an address match. The mask register has no effect when comparing to the General Call address ('0000000').	0x00
I2C0MASK2	R/W	0x038	**I2C Slave address mask register 2**. This mask register is associated with I2ADR2 to determine an address match. The mask register has no effect when comparing to the General Call address ('0000000').	0x00
I2C0MASK3	R/W	0x03C	**I2C Slave address mask register 3**. This mask register is associated with I2ADR3 to determine an address match. The mask register has no effect when comparing to the General Call address ('0000000').	0x00

[1] Reset value reflects the data stored in used bits only. It does not include reserved bits content.

15.7.1 I²C Control Set register (I2C0CONSET - 0x4000 0000)

The CONSET registers control setting of bits in the CON register that controls operation of the I²C interface. Writing a one to a bit of this register causes the corresponding bit in the I²C control register to be set. Writing a zero has no effect.

Table 219. I²C Control Set register (I2C0CONSET - address 0x4000 0000) bit description

Bit	Symbol	Description	Reset value
1:0	-	Reserved. User software should not write ones to reserved bits. The value read from a reserved bit is not defined.	NA
2	AA	Assert acknowledge flag.	
3	SI	I²C interrupt flag.	0
4	STO	STOP flag.	0
5	STA	START flag.	0
6	I2EN	I²C interface enable.	0
31:7	-	Reserved. The value read from a reserved bit is not defined.	-

I2EN I²C Interface Enable. When I2EN is 1, the I²C interface is enabled. I2EN can be cleared by writing 1 to the I2ENC bit in the CONCLR register. When I2EN is 0, the I²C interface is disabled.

When I2EN is "0", the SDA and SCL input signals are ignored, the I²C block is in the "not addressed" slave state, and the STO bit is forced to "0".

All information provided in this document is subject to legal disclaimers. © NXP B.V. 2012. All rights reserved.

I2EN should not be used to temporarily release the I^2C-bus since, when I2EN is reset, the I^2C-bus status is lost. The AA flag should be used instead.

STA is the START flag. Setting this bit causes the I^2C interface to enter master mode and transmit a START condition or transmit a Repeated START condition if it is already in master mode.

When STA is 1 and the I^2C interface is not already in master mode, it enters master mode, checks the bus and generates a START condition if the bus is free. If the bus is not free, it waits for a STOP condition (which will free the bus) and generates a START condition after a delay of a half clock period of the internal clock generator. If the I^2C interface is already in master mode and data has been transmitted or received, it transmits a Repeated START condition. STA may be set at any time, including when the I^2C interface is in an addressed slave mode.

STA can be cleared by writing 1 to the STAC bit in the CONCLR register. When STA is 0, no START condition or Repeated START condition will be generated.

If STA and STO are both set, then a STOP condition is transmitted on the I^2C-bus if it the interface is in master mode, and transmits a START condition thereafter. If the I^2C interface is in slave mode, an internal STOP condition is generated, but is not transmitted on the bus.

STO is the STOP flag. Setting this bit causes the I^2C interface to transmit a STOP condition in master mode, or recover from an error condition in slave mode. When STO is 1 in master mode, a STOP condition is transmitted on the I^2C-bus. When the bus detects the STOP condition, STO is cleared automatically.

In slave mode, setting this bit can recover from an error condition. In this case, no STOP condition is transmitted to the bus. The hardware behaves as if a STOP condition has been received and it switches to “not addressed” slave receiver mode. The STO flag is cleared by hardware automatically.

SI is the I^2C Interrupt Flag. This bit is set when the I^2C state changes. However, entering state F8 does not set SI since there is nothing for an interrupt service routine to do in that case.

While SI is set, the low period of the serial clock on the SCL line is stretched, and the serial transfer is suspended. When SCL is HIGH, it is unaffected by the state of the SI flag. SI must be reset by software, by writing a 1 to the SIC bit in the CONCLR register.

AA is the Assert Acknowledge Flag. When set to 1, an acknowledge (low level to SDA) will be returned during the acknowledge clock pulse on the SCL line on the following situations:

1. The address in the Slave Address Register has been received.
2. The General Call address has been received while the General Call bit (GC) in the ADR register is set.
3. A data byte has been received while the I^2C is in the master receiver mode.
4. A data byte has been received while the I^2C is in the addressed slave receiver mode

All information provided in this document is subject to legal disclaimers.
© NXP B.V. 2012. All rights reserved.

The AA bit can be cleared by writing 1 to the AAC bit in the CONCLR register. When AA is 0, a not acknowledge (HIGH level to SDA) will be returned during the acknowledge clock pulse on the SCL line on the following situations:

1. A data byte has been received while the I^{2}C is in the master receiver mode.
2. A data byte has been received while the I^{2}C is in the addressed slave receiver mode.

15.7.2 I^{2}C Status register (I2C0STAT - 0x4000 0004)

Each I^{2}C Status register reflects the condition of the corresponding I^{2}C interface. The I^{2}C Status register is Read-Only.

Table 220. I^{2}C Status register (I2C0STAT - 0x4000 0004) bit description

Bit	Symbol	Description	Reset value
2:0	-	These bits are unused and are always 0.	0
7:3	Status	These bits give the actual status information about the I^{2}C interface.	0x1F
31:8	-	Reserved. The value read from a reserved bit is not defined.	-

The three least significant bits are always 0. Taken as a byte, the status register contents represent a status code. There are 26 possible status codes. When the status code is 0xF8, there is no relevant information available and the SI bit is not set. All other 25 status codes correspond to defined I^{2}C states. When any of these states entered, the SI bit will be set. For a complete list of status codes, refer to tables from Table 235 to Table 240.

15.7.3 I^{2}C Data register (I2C0DAT - 0x4000 0008)

This register contains the data to be transmitted or the data just received. The CPU can read and write to this register only while it is not in the process of shifting a byte, when the SI bit is set. Data in DAT register remains stable as long as the SI bit is set. Data in DAT register is always shifted from right to left: the first bit to be transmitted is the MSB (bit 7), and after a byte has been received, the first bit of received data is located at the MSB of the DAT register.

Table 221. I^{2}C Data register (I2C0DAT - 0x4000 0008) bit description

Bit	Symbol	Description	Reset value
7:0	Data	This register holds data values that have been received or are to be transmitted.	0
31:8	-	Reserved. The value read from a reserved bit is not defined.	-

15.7.4 I^{2}C Slave Address register 0 (I2C0ADR0- 0x4000 000C)

This register is readable and writable and are only used when an I^{2}C interface is set to slave mode. In master mode, this register has no effect. The LSB of the ADR register is the General Call bit. When this bit is set, the General Call address (0x00) is recognized.

If this register contains 0x00, the I^{2}C will not acknowledge any address on the bus. All four registers (ADR0 to ADR3) will be cleared to this disabled state on reset. See also Table 228.

All information provided in this document is subject to legal disclaimers.
© NXP B.V. 2012. All rights reserved.

Table 222. I²C Slave Address register 0 (I2C0ADR0- 0x4000 000C) bit description

Bit	Symbol	Description	Reset value
0	GC	General Call enable bit.	0
7:1	Address	The I²C device address for slave mode.	0x00
31:8	-	Reserved. The value read from a reserved bit is not defined.	-

15.7.5 I²C SCL HIGH and LOW duty cycle registers (I2C0SCLH - 0x4000 0010 and I2C0SCLL- 0x4000 0014)

Table 223. I²C SCL HIGH Duty Cycle register (I2C0SCLH - address 0x4000 0010) bit description

Bit	Symbol	Description	Reset value
15:0	SCLH	Count for SCL HIGH time period selection.	0x0004
31:16	-	Reserved. The value read from a reserved bit is not defined.	-

Table 224. I²C SCL Low duty cycle register (I2C0SCLL - 0x4000 0014) bit description

Bit	Symbol	Description	Reset value
15:0	SCLL	Count for SCL low time period selection.	0x0004
31:16	-	Reserved. The value read from a reserved bit is not defined.	-

15.7.5.1 Selecting the appropriate I²C data rate and duty cycle

Software must set values for the registers SCLH and SCLL to select the appropriate data rate and duty cycle. SCLH defines the number of I2C_PCLK cycles for the SCL HIGH time, SCLL defines the number of I2C_PCLK cycles for the SCL low time. The frequency is determined by the following formula (I2C_PCLK is the frequency of the peripheral I2C clock):

$$I^2C_{bitfrequency} = \frac{I2CPCLK}{SCLH + SCLL} \quad (4)$$

The values for SCLL and SCLH must ensure that the data rate is in the appropriate I²C data rate range. Each register value must be greater than or equal to 4. Table 225 gives some examples of I²C-bus rates based on I2C_PCLK frequency and SCLL and SCLH values.

Table 225. SCLL + SCLH values for selected I²C clock values

I²C mode	I²C bit frequency	I2C_PCLK (MHz)								
		6	8	10	12	16	20	30	40	50
		SCLH + SCLL								
Standard mode	100 kHz	60	80	100	120	160	200	300	400	500
Fast-mode	400 kHz	15	20	25	30	40	50	75	100	125
Fast-mode Plus	1 MHz	-	8	10	12	16	20	30	40	50

All information provided in this document is subject to legal disclaimers.
© NXP B.V. 2012. All rights reserved.

SCLL and SCLH values should not necessarily be the same. Software can set different duty cycles on SCL by setting these two registers. For example, the I^{2}C-bus specification defines the SCL low time and high time at different values for a Fast-mode and Fast-mode Plus I^{2}C.

15.7.6 I^{2}C Control Clear register (I2C0CONCLR - 0x4000 0018)

The CONCLR register control clearing of bits in the CON register that controls operation of the I^{2}C interface. Writing a one to a bit of this register causes the corresponding bit in the I^{2}C control register to be cleared. Writing a zero has no effect.

Table 226. I^{2}C Control Clear register (I2C0CONCLR - 0x4000 0018) bit description

Bit	Symbol	Description	Reset value
1:0	-	Reserved. User software should not write ones to reserved bits. The value read from a reserved bit is not defined.	NA
2	AAC	Assert acknowledge Clear bit.	
3	SIC	I^{2}C interrupt Clear bit.	0
4	-	Reserved. User software should not write ones to reserved bits. The value read from a reserved bit is not defined.	NA
5	STAC	START flag Clear bit.	0
6	I2ENC	I^{2}C interface Disable bit.	0
7	-	Reserved. User software should not write ones to reserved bits. The value read from a reserved bit is not defined.	NA
31:8	-	Reserved. The value read from a reserved bit is not defined.	-

AAC is the Assert Acknowledge Clear bit. Writing a 1 to this bit clears the AA bit in the CONSET register. Writing 0 has no effect.

SIC is the I^{2}C Interrupt Clear bit. Writing a 1 to this bit clears the SI bit in the CONSET register. Writing 0 has no effect.

STAC is the START flag Clear bit. Writing a 1 to this bit clears the STA bit in the CONSET register. Writing 0 has no effect.

I2ENC is the I^{2}C Interface Disable bit. Writing a 1 to this bit clears the I2EN bit in the CONSET register. Writing 0 has no effect.

15.7.7 I^{2}C Monitor mode control register (I2C0MMCTRL - 0x4000 001C)

This register controls the Monitor mode which allows the I^{2}C module to monitor traffic on the I^{2}C bus without actually participating in traffic or interfering with the I^{2}C bus.

All information provided in this document is subject to legal disclaimers.
© NXP B.V. 2012. All rights reserved.

Table 227. I²C Monitor mode control register (I2C0MMCTRL - 0x4000 001C) bit description

Bit	Symbol	Value	Description	Reset value
0	MM_ENA		Monitor mode enable.	0
		0	Monitor mode disabled.	
		1	The I²C module will enter monitor mode. In this mode the SDA output will be forced high. This will prevent the I²C module from outputting data of any kind (including ACK) onto the I²C data bus. Depending on the state of the ENA_SCL bit, the output may be also forced high, preventing the module from having control over the I²C clock line.	
1	ENA_SCL		SCL output enable.	0
		0	When this bit is cleared to ‘0’, the SCL output will be forced high when the module is in monitor mode. As described above, this will prevent the module from having any control over the I²C clock line.	
		1	When this bit is set, the I²C module may exercise the same control over the clock line that it would in normal operation. This means that, acting as a slave peripheral, the I²C module can “stretch” the clock line (hold it low) until it has had time to respond to an I²C interrupt.[1]	
2	MATCH_ALL		Select interrupt register match.	0
		0	When this bit is cleared, an interrupt will only be generated when a match occurs to one of the (up-to) four address registers described above. That is, the module will respond as a normal slave as far as address-recognition is concerned.	
		1	When this bit is set to ‘1’ and the I²C is in monitor mode, an interrupt will be generated on ANY address received. This will enable the part to monitor all traffic on the bus.	
31:3	-	-	Reserved. The value read from reserved bits is not defined.	

[1] When the ENA_SCL bit is cleared and the I²C no longer has the ability to stall the bus, interrupt response time becomes important. To give the part more time to respond to an I²C interrupt under these conditions, a DATA _BUFFER register is used (Section 15.7.9) to hold received data for a full 9-bit word transmission time.

Remark: The ENA_SCL and MATCH_ALL bits have no effect if the MM_ENA is ‘0’ (i.e. if the module is NOT in monitor mode).

15.7.7.1 Interrupt in Monitor mode

All interrupts will occur as normal when the module is in monitor mode. This means that the first interrupt will occur when an address-match is detected (any address received if the MATCH_ALL bit is set, otherwise an address matching one of the four address registers).

Subsequent to an address-match detection, interrupts will be generated after each data byte is received for a slave-write transfer, or after each byte that the module “thinks” it has transmitted for a slave-read transfer. In this second case, the data register will actually contain data transmitted by some other slave on the bus which was actually addressed by the master.

All information provided in this document is subject to legal disclaimers.

© NXP B.V. 2012. All rights reserved.

Following all of these interrupts, the processor may read the data register to see what was actually transmitted on the bus.

15.7.7.2 Loss of arbitration in Monitor mode

In monitor mode, the I^{2}C module will not be able to respond to a request for information by the bus master or issue an ACK). Some other slave on the bus will respond instead. This will most probably result in a lost-arbitration state as far as our module is concerned.

Software should be aware of the fact that the module is in monitor mode and should not respond to any loss of arbitration state that is detected. In addition, hardware may be designed into the module to block some/all loss of arbitration states from occurring if those state would either prevent a desired interrupt from occurring or cause an unwanted interrupt to occur. Whether any such hardware will be added is still to be determined.

15.7.8 I^{2}C Slave Address registers (I2C0ADR[1, 2, 3] - 0x4000 00[20, 24, 28])

These registers are readable and writable and are only used when an I^{2}C interface is set to slave mode. In master mode, this register has no effect. The LSB of the ADR register is the General Call bit. When this bit is set, the General Call address (0x00) is recognized.

If these registers contain 0x00, the I^{2}C will not acknowledge any address on the bus. All four registers will be cleared to this disabled state on reset (also see Table 222).

Table 228. I^{2}C Slave Address registers (I2C0ADR[1, 2, 3]- 0x4000 00[20, 24, 28]) bit description

Bit	Symbol	Description	Reset value
0	GC	General Call enable bit.	0
7:1	Address	The I^{2}C device address for slave mode.	0x00
31:8	-	Reserved. The value read from a reserved bit is not defined.	0

15.7.9 I^{2}C Data buffer register (I2C0DATA_BUFFER - 0x4000 002C)

In monitor mode, the I^{2}C module may lose the ability to stretch the clock (stall the bus) if the ENA_SCL bit is not set. This means that the processor will have a limited amount of time to read the contents of the data received on the bus. If the processor reads the DAT shift register, as it ordinarily would, it could have only one bit-time to respond to the interrupt before the received data is overwritten by new data.

To give the processor more time to respond, a new 8-bit, read-only DATA_BUFFER register will be added. The contents of the 8 MSBs of the DAT shift register will be transferred to the DATA_BUFFER automatically after every nine bits (8 bits of data plus ACK or NACK) has been received on the bus. This means that the processor will have nine bit transmission times to respond to the interrupt and read the data before it is overwritten.

The processor will still have the ability to read the DAT register directly, as usual, and the behavior of DAT will not be altered in any way.

Although the DATA_BUFFER register is primarily intended for use in monitor mode with the ENA_SCL bit = ‘0’, it will be available for reading at any time under any mode of operation.

All information provided in this document is subject to legal disclaimers.
© NXP B.V. 2012. All rights reserved.

Table 229. I²C Data buffer register (I2C0DATA_BUFFER - 0x4000 002C) bit description

Bit	Symbol	Description	Reset value
7:0	Data	This register holds contents of the 8 MSBs of the DAT shift register.	0
31:8	-	Reserved. The value read from a reserved bit is not defined.	0

15.7.10 I²C Mask registers (I2C0MASK[0, 1, 2, 3] - 0x4000 00[30, 34, 38, 3C])

The four mask registers each contain seven active bits (7:1). Any bit in these registers which is set to ‘1’ will cause an automatic compare on the corresponding bit of the received address when it is compared to the ADDRn register associated with that mask register. In other words, bits in an ADDRn register which are masked are not taken into account in determining an address match.

On reset, all mask register bits are cleared to ‘0’.

The mask register has no effect on comparison to the General Call address (“0000000”).

Bits(31:8) and bit(0) of the mask registers are unused and should not be written to. These bits will always read back as zeros.

When an address-match interrupt occurs, the processor will have to read the data register (DAT) to determine what the received address was that actually caused the match.

Table 230. I²C Mask registers (I2C0MASK[0, 1, 2, 3] - 0x4000 00[30, 34, 38, 3C]) bit description

Bit	Symbol	Description	Reset value
0	-	Reserved. User software should not write ones to reserved bits. This bit reads always back as 0.	0
7:1	MASK	Mask bits.	0x00
31:8	-	Reserved. The value read from reserved bits is undefined.	0

15.8 I²C operating modes

In a given application, the I²C block may operate as a master, a slave, or both. In the slave mode, the I²C hardware looks for any one of its four slave addresses and the General Call address. If one of these addresses is detected, an interrupt is requested. If the processor wishes to become the bus master, the hardware waits until the bus is free before the master mode is entered so that a possible slave operation is not interrupted. If bus arbitration is lost in the master mode, the I²C block switches to the slave mode immediately and can detect its own slave address in the same serial transfer.

15.8.1 Master Transmitter mode

In this mode data is transmitted from master to slave. Before the master transmitter mode can be entered, the CONSET register must be initialized as shown in Table 231. I2EN must be set to 1 to enable the I²C function. If the AA bit is 0, the I²C interface will not acknowledge any address when another device is master of the bus, so it can not enter slave mode. The STA, STO and SI bits must be 0. The SI Bit is cleared by writing 1 to the SIC bit in the CONCLR register. THe STA bit should be cleared after writing the slave address.

All information provided in this document is subject to legal disclaimers.
© NXP B.V. 2012. All rights reserved.

Table 231. I2C0CONSET and I2C1CONSET used to configure Master mode

Bit	7	6	5	4	3	2	1	0
Symbol	-	I2EN	STA	STO	SI	AA	-	-
Value	-	1	0	0	0	0	-	-

The first byte transmitted contains the slave address of the receiving device (7 bits) and the data direction bit. In this mode the data direction bit (R/W) should be 0 which means Write. The first byte transmitted contains the slave address and Write bit. Data is transmitted 8 bits at a time. After each byte is transmitted, an acknowledge bit is received. START and STOP conditions are output to indicate the beginning and the end of a serial transfer.

The I^2C interface will enter master transmitter mode when software sets the STA bit. The I^2C logic will send the START condition as soon as the bus is free. After the START condition is transmitted, the SI bit is set, and the status code in the STAT register is 0x08. This status code is used to vector to a state service routine which will load the slave address and Write bit to the DAT register, and then clear the SI bit. SI is cleared by writing a 1 to the SIC bit in the CONCLR register.

When the slave address and R/W bit have been transmitted and an acknowledgment bit has been received, the SI bit is set again, and the possible status codes now are 0x18, 0x20, or 0x38 for the master mode, or 0x68, 0x78, or 0xB0 if the slave mode was enabled (by setting AA to 1). The appropriate actions to be taken for each of these status codes are shown in Table 235 to Table 240.

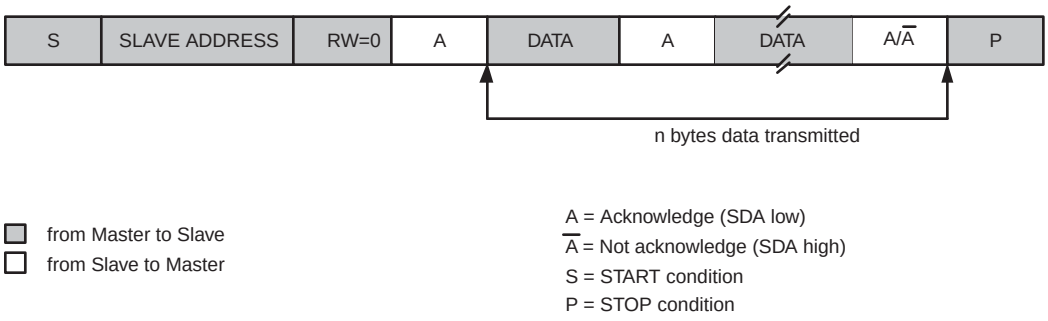

Fig 45. Format in the Master Transmitter mode

15.8.2 Master Receiver mode

In the master receiver mode, data is received from a slave transmitter. The transfer is initiated in the same way as in the master transmitter mode. When the START condition has been transmitted, the interrupt service routine must load the slave address and the data direction bit to the I^2C Data register (DAT), and then clear the SI bit. In this case, the data direction bit (R/W) should be 1 to indicate a read.

When the slave address and data direction bit have been transmitted and an acknowledge bit has been received, the SI bit is set, and the Status Register will show the status code. For master mode, the possible status codes are 0x40, 0x48, or 0x38. For slave mode, the possible status codes are 0x68, 0x78, or 0xB0. For details, refer to Table 236.

All information provided in this document is subject to legal disclaimers.

© NXP B.V. 2012. All rights reserved.

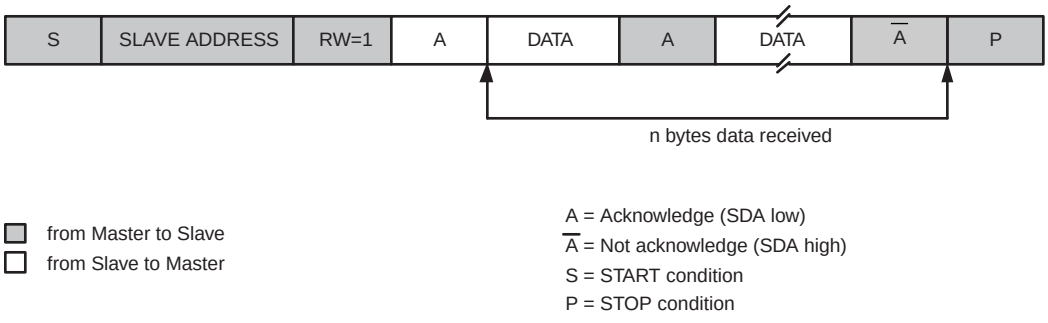

Fig 46. Format of Master Receiver mode

After a Repeated START condition, I^{2}C may switch to the master transmitter mode.

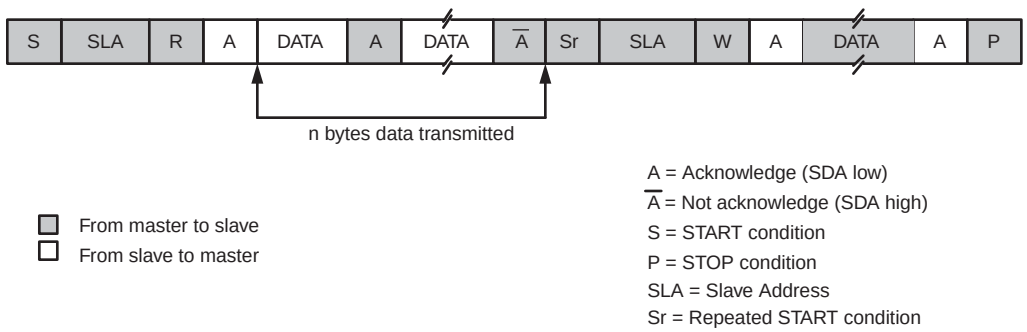

Fig 47. A Master Receiver switches to Master Transmitter after sending Repeated START

15.8.3 Slave Receiver mode

In the slave receiver mode, data bytes are received from a master transmitter. To initialize the slave receiver mode, write any of the Slave Address registers (ADR0-3) and write the I^{2}C Control Set register (CONSET) as shown in Table 232.

Table 232. I2C0CONSET and I2C1CONSET used to configure Slave mode

Bit	7	6	5	4	3	2	1	0
Symbol	-	I2EN	STA	STO	SI	AA	-	-
Value	-	1	0	0	0	1	-	-

I2EN must be set to 1 to enable the I^{2}C function. AA bit must be set to 1 to acknowledge its own slave address or the General Call address. The STA, STO and SI bits are set to 0.

After ADR and CONSET are initialized, the I^{2}C interface waits until it is addressed by its own address or general address followed by the data direction bit. If the direction bit is 0 (W), it enters slave receiver mode. If the direction bit is 1 (R), it enters slave transmitter mode. After the address and direction bit have been received, the SI bit is set and a valid status code can be read from the Status register (STAT). Refer to Table 239 for the status codes and actions.

All information provided in this document is subject to legal disclaimers.

© NXP B.V. 2012. All rights reserved.

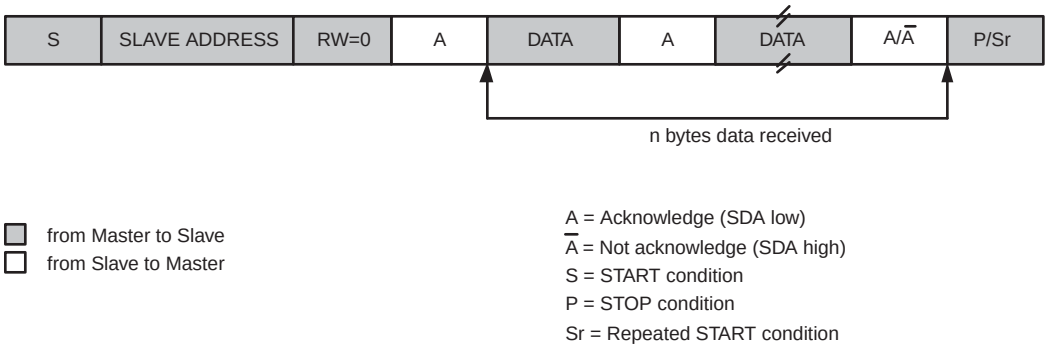

Fig 48. Format of Slave Receiver mode

15.8.4 Slave Transmitter mode

The first byte is received and handled as in the slave receiver mode. However, in this mode, the direction bit will be 1, indicating a read operation. Serial data is transmitted via SDA while the serial clock is input through SCL. START and STOP conditions are recognized as the beginning and end of a serial transfer. In a given application, I^2C may operate as a master and as a slave. In the slave mode, the I^2C hardware looks for its own slave address and the General Call address. If one of these addresses is detected, an interrupt is requested. When the microcontrollers wishes to become the bus master, the hardware waits until the bus is free before the master mode is entered so that a possible slave action is not interrupted. If bus arbitration is lost in the master mode, the I^2C interface switches to the slave mode immediately and can detect its own slave address in the same serial transfer.

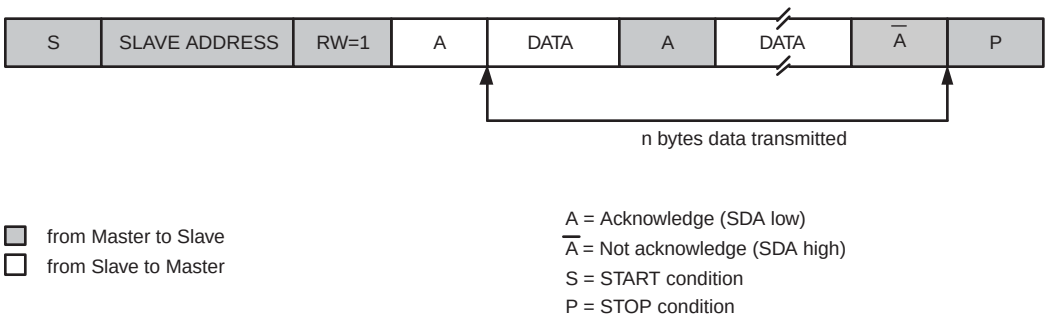

Fig 49. Format of Slave Transmitter mode

15.9 I^2C implementation and operation

Figure 50 shows how the on-chip I^2C-bus interface is implemented, and the following text describes the individual blocks.

All information provided in this document is subject to legal disclaimers.

© NXP B.V. 2012. All rights reserved.

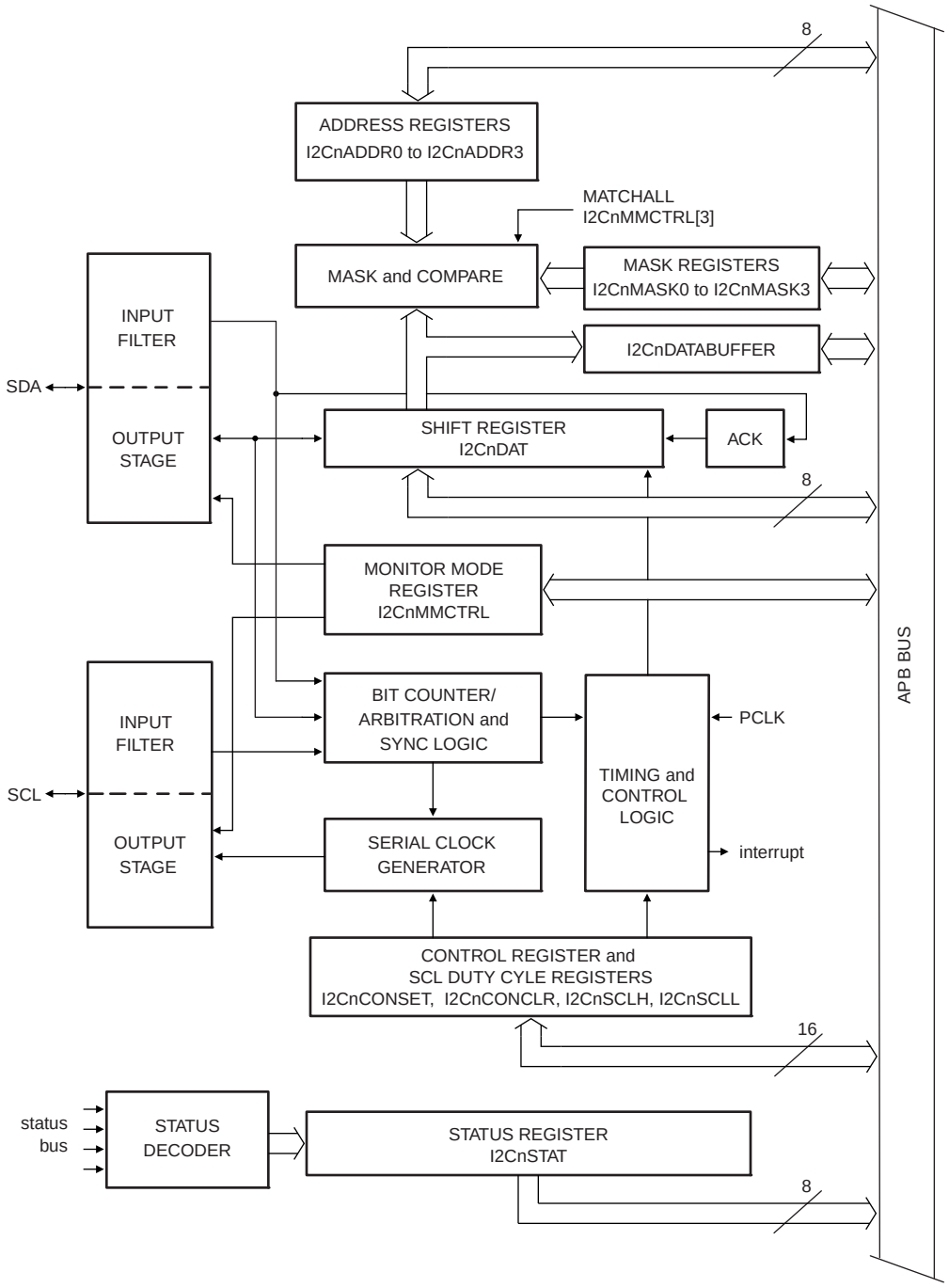

Fig 50. I²C serial interface block diagram

15.9.1 Input filters and output stages

Input signals are synchronized with the internal clock, and spikes shorter than three clocks are filtered out.

The output for I²C is a special pad designed to conform to the I²C specification.

All information provided in this document is subject to legal disclaimers.

© NXP B.V. 2012. All rights reserved.

15.9.2 Address Registers, ADDR0 to ADDR3

These registers may be loaded with the 7-bit slave address (7 most significant bits) to which the I^2C block will respond when programmed as a slave transmitter or receiver. The LSB (GC) is used to enable General Call address (0x00) recognition. When multiple slave addresses are enabled, the actual address received may be read from the DAT register at the state where the own slave address has been received.

15.9.3 Address mask registers, MASK0 to MASK3

The four mask registers each contain seven active bits (7:1). Any bit in these registers which is set to ‘1’ will cause an automatic compare on the corresponding bit of the received address when it is compared to the ADDRn register associated with that mask register. In other words, bits in an ADDRn register which are masked are not taken into account in determining an address match.

When an address-match interrupt occurs, the processor will have to read the data register (DAT) to determine what the received address was that actually caused the match.

15.9.4 Comparator

The comparator compares the received 7-bit slave address with its own slave address (7 most significant bits in ADR). It also compares the first received 8-bit byte with the General Call address (0x00). If an equality is found, the appropriate status bits are set and an interrupt is requested.

15.9.5 Shift register, DAT

This 8-bit register contains a byte of serial data to be transmitted or a byte which has just been received. Data in DAT is always shifted from right to left; the first bit to be transmitted is the MSB (bit 7) and, after a byte has been received, the first bit of received data is located at the MSB of DAT. While data is being shifted out, data on the bus is simultaneously being shifted in; DAT always contains the last byte present on the bus. Thus, in the event of lost arbitration, the transition from master transmitter to slave receiver is made with the correct data in DAT.

15.9.6 Arbitration and synchronization logic

In the master transmitter mode, the arbitration logic checks that every transmitted logic 1 actually appears as a logic 1 on the I^2C-bus. If another device on the bus overrules a logic 1 and pulls the SDA line low, arbitration is lost, and the I^2C block immediately changes from master transmitter to slave receiver. The I^2C block will continue to output clock pulses (on SCL) until transmission of the current serial byte is complete.

Arbitration may also be lost in the master receiver mode. Loss of arbitration in this mode can only occur while the I^2C block is returning a “not acknowledge: (logic 1) to the bus. Arbitration is lost when another device on the bus pulls this signal low. Since this can occur only at the end of a serial byte, the I^2C block generates no further clock pulses. Figure 51 shows the arbitration procedure.

All information provided in this document is subject to legal disclaimers.
© NXP B.V. 2012. All rights reserved.

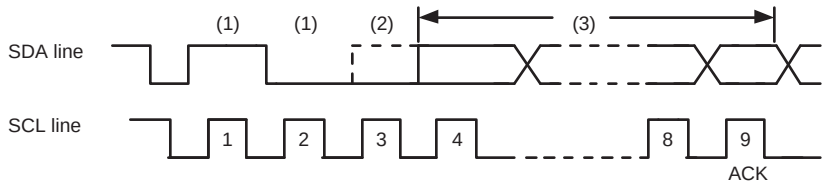

(1) Another device transmits serial data.

(2) Another device overrules a logic (dotted line) transmitted this I²C master by pulling the SDA line low. Arbitration is lost, and this I²C enters Slave Receiver mode.

(3) This I²C is in Slave Receiver mode but still generates clock pulses until the current byte has been transmitted. This I²C will not generate clock pulses for the next byte. Data on SDA originates from the new master once it has won arbitration.

Fig 51. Arbitration procedure

The synchronization logic will synchronize the serial clock generator with the clock pulses on the SCL line from another device. If two or more master devices generate clock pulses, the “mark” duration is determined by the device that generates the shortest “marks,” and the “space” duration is determined by the device that generates the longest “spaces”. Figure 52 shows the synchronization procedure.

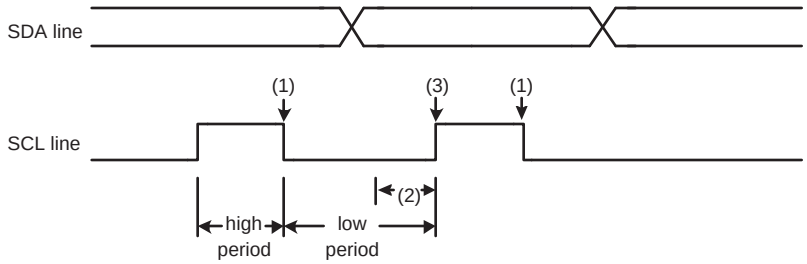

(1) Another device pulls the SCL line low before this I²C has timed a complete high time. The other device effectively determines the (shorter) HIGH period.

(2) Another device continues to pull the SCL line low after this I²C has timed a complete low time and released SCL. The I²C clock generator is forced to wait until SCL goes HIGH. The other device effectively determines the (longer) LOW period.

(3) The SCL line is released , and the clock generator begins timing the HIGH time.

Fig 52. Serial clock synchronization

A slave may stretch the space duration to slow down the bus master. The space duration may also be stretched for handshaking purposes. This can be done after each bit or after a complete byte transfer. the I²C block will stretch the SCL space duration after a byte has been transmitted or received and the acknowledge bit has been transferred. The serial interrupt flag (SI) is set, and the stretching continues until the serial interrupt flag is cleared.

15.9.7 Serial clock generator

This programmable clock pulse generator provides the SCL clock pulses when the I²C block is in the master transmitter or master receiver mode. It is switched off when the I²C block is in slave mode. The I²C output clock frequency and duty cycle is programmable

All information provided in this document is subject to legal disclaimers.
© NXP B.V. 2012. All rights reserved.

via the I²C Clock Control Registers. See the description of the I2CSCLL and I2CSCLH registers for details. The output clock pulses have a duty cycle as programmed unless the bus is synchronizing with other SCL clock sources as described above.

15.9.8 Timing and control

The timing and control logic generates the timing and control signals for serial byte handling. This logic block provides the shift pulses for DAT, enables the comparator, generates and detects START and STOP conditions, receives and transmits acknowledge bits, controls the master and slave modes, contains interrupt request logic, and monitors the I²C-bus status.

15.9.9 Control register, CONSET and CONCLR

The I²C control register contains bits used to control the following I²C block functions: start and restart of a serial transfer, termination of a serial transfer, bit rate, address recognition, and acknowledgment.

The contents of the I²C control register may be read as CONSET. Writing to CONSET will set bits in the I²C control register that correspond to ones in the value written. Conversely, writing to CONCLR will clear bits in the I²C control register that correspond to ones in the value written.

15.9.10 Status decoder and status register

The status decoder takes all of the internal status bits and compresses them into a 5-bit code. This code is unique for each I²C-bus status. The 5-bit code may be used to generate vector addresses for fast processing of the various service routines. Each service routine processes a particular bus status. There are 26 possible bus states if all four modes of the I²C block are used. The 5-bit status code is latched into the five most significant bits of the status register when the serial interrupt flag is set (by hardware) and remains stable until the interrupt flag is cleared by software. The three least significant bits of the status register are always zero. If the status code is used as a vector to service routines, then the routines are displaced by eight address locations. Eight bytes of code is sufficient for most of the service routines (see the software example in this section).

15.10 Details of I²C operating modes

The four operating modes are:

- Master Transmitter
- Master Receiver
- Slave Receiver
- Slave Transmitter

Data transfers in each mode of operation are shown in Figure 53, Figure 54, Figure 55, Figure 56, and Figure 57. Table 233 lists abbreviations used in these figures when describing the I²C operating modes.

All information provided in this document is subject to legal disclaimers.
© NXP B.V. 2012. All rights reserved.

Table 233. Abbreviations used to describe an I²C operation

Abbreviation	Explanation
S	START Condition
SLA	7-bit slave address
R	Read bit (HIGH level at SDA)
W	Write bit (LOW level at SDA)
A	Acknowledge bit (LOW level at SDA)
$\overline{A}$	Not acknowledge bit (HIGH level at SDA)
Data	8-bit data byte
P	STOP condition

In Figure 53 to Figure 57, circles are used to indicate when the serial interrupt flag is set. The numbers in the circles show the status code held in the STAT register. At these points, a service routine must be executed to continue or complete the serial transfer. These service routines are not critical since the serial transfer is suspended until the serial interrupt flag is cleared by software.

When a serial interrupt routine is entered, the status code in STAT is used to branch to the appropriate service routine. For each status code, the required software action and details of the following serial transfer are given in tables from Table 235 to Table 241.

15.10.1 Master Transmitter mode

In the master transmitter mode, a number of data bytes are transmitted to a slave receiver (see Figure 53). Before the master transmitter mode can be entered, I2CON must be initialized as follows:

Table 234. I2C0CONSET used to initialize Master Transmitter mode

Bit	7	6	5	4	3	2	1	0
Symbol	-	I2EN	STA	STO	SI	AA	-	-
Value	-	1	0	0	0	x	-	-

The I²C rate must also be configured in the SCLL and SCLH registers. I2EN must be set to logic 1 to enable the I²C block. If the AA bit is reset, the I²C block will not acknowledge its own slave address or the General Call address in the event of another device becoming master of the bus. In other words, if AA is reset, the I²C interface cannot enter slave mode. STA, STO, and SI must be reset.

All information provided in this document is subject to legal disclaimers.

© NXP B.V. 2012. All rights reserved.

The master transmitter mode may now be entered by setting the STA bit. The I^2C logic will now test the I^2C-bus and generate a START condition as soon as the bus becomes free. When a START condition is transmitted, the serial interrupt flag (SI) is set, and the status code in the status register (STAT) will be 0x08. This status code is used by the interrupt service routine to enter the appropriate state service routine that loads DAT with the slave address and the data direction bit (SLA+W). The SI bit in CON must then be reset before the serial transfer can continue.

When the slave address and the direction bit have been transmitted and an acknowledgment bit has been received, the serial interrupt flag (SI) is set again, and a number of status codes in STAT are possible. There are 0x18, 0x20, or 0x38 for the master mode and also 0x68, 0x78, or 0xB0 if the slave mode was enabled (AA = logic 1). The appropriate action to be taken for each of these status codes is detailed in Table 235. After a Repeated START condition (state 0x10). The I^2C block may switch to the master receiver mode by loading DAT with SLA+R).

All information provided in this document is subject to legal disclaimers.
© NXP B.V. 2012. All rights reserved.

Table 235. Master Transmitter mode

Status Code (I2CSTAT)	Status of the I²C-bus and hardware	Application software response					Next action taken by I²C hardware
		To/From DAT	To CON				
			STA	STO	SI	AA	
0x08	A START condition has been transmitted.	Load SLA+W; clear STA	X	0	0	X	SLA+W will be transmitted; ACK bit will be received.
0x10	A Repeated START condition has been transmitted.	Load SLA+W or	X	0	0	X	As above.
		Load SLA+R; Clear STA	X	0	0	X	SLA+R will be transmitted; the I²C block will be switched to MST/REC mode.
0x18	SLA+W has been transmitted; ACK has been received.	Load data byte or	0	0	0	X	Data byte will be transmitted; ACK bit will be received.
		No DAT action or	1	0	0	X	Repeated START will be transmitted.
		No DAT action or	0	1	0	X	STOP condition will be transmitted; STO flag will be reset.
		No DAT action	1	1	0	X	STOP condition followed by a START condition will be transmitted; STO flag will be reset.
0x20	SLA+W has been transmitted; NOT ACK has been received.	Load data byte or	0	0	0	X	Data byte will be transmitted; ACK bit will be received.
		No DAT action or	1	0	0	X	Repeated START will be transmitted.
		No DAT action or	0	1	0	X	STOP condition will be transmitted; STO flag will be reset.
		No DAT action	1	1	0	X	STOP condition followed by a START condition will be transmitted; STO flag will be reset.
0x28	Data byte in DAT has been transmitted; ACK has been received.	Load data byte or	0	0	0	X	Data byte will be transmitted; ACK bit will be received.
		No DAT action or	1	0	0	X	Repeated START will be transmitted.
		No DAT action or	0	1	0	X	STOP condition will be transmitted; STO flag will be reset.
		No DAT action	1	1	0	X	STOP condition followed by a START condition will be transmitted; STO flag will be reset.
0x30	Data byte in DAT has been transmitted; NOT ACK has been received.	Load data byte or	0	0	0	X	Data byte will be transmitted; ACK bit will be received.
		No DAT action or	1	0	0	X	Repeated START will be transmitted.
		No DAT action or	0	1	0	X	STOP condition will be transmitted; STO flag will be reset.
		No DAT action	1	1	0	X	STOP condition followed by a START condition will be transmitted; STO flag will be reset.
0x38	Arbitration lost in SLA+R/W or Data bytes.	No DAT action or	0	0	0	X	I²C-bus will be released; not addressed slave will be entered.
		No DAT action	1	0	0	X	A START condition will be transmitted when the bus becomes free.

All information provided in this document is subject to legal disclaimers.

© NXP B.V. 2012. All rights reserved.

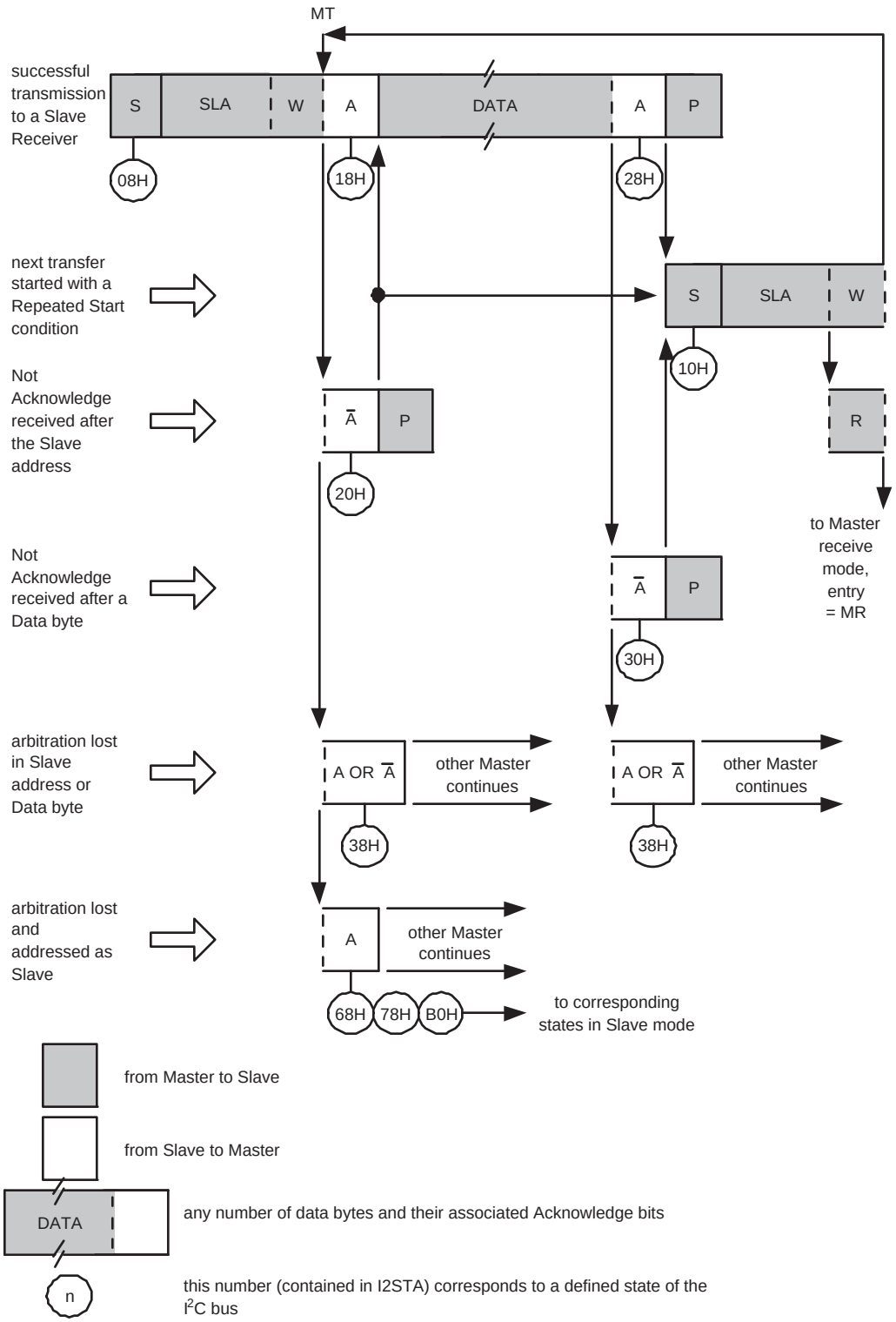

Fig 53. Format and states in the Master Transmitter mode

All information provided in this document is subject to legal disclaimers.

© NXP B.V. 2012. All rights reserved.

15.10.2 Master Receiver mode

In the master receiver mode, a number of data bytes are received from a slave transmitter (see Figure 54). The transfer is initialized as in the master transmitter mode. When the START condition has been transmitted, the interrupt service routine must load DAT with the 7-bit slave address and the data direction bit (SLA+R). The SI bit in CON must then be cleared before the serial transfer can continue.

When the slave address and the data direction bit have been transmitted and an acknowledgment bit has been received, the serial interrupt flag (SI) is set again, and a number of status codes in STAT are possible. These are 0x40, 0x48, or 0x38 for the master mode and also 0x68, 0x78, or 0xB0 if the slave mode was enabled (AA = 1). The appropriate action to be taken for each of these status codes is detailed in Table 236. After a Repeated START condition (state 0x10), the I^2C block may switch to the master transmitter mode by loading DAT with SLA+W.

All information provided in this document is subject to legal disclaimers.
© NXP B.V. 2012. All rights reserved.

Table 236. Master Receiver mode

Status Code (STAT)	Status of the I²C-bus and hardware	Application software response					Next action taken by I²C hardware
		To/From DAT	To CON				
			STA	STO	SI	AA	
0x08	A START condition has been transmitted.	Load SLA+R	X	0	0	X	SLA+R will be transmitted; ACK bit will be received.
0x10	A Repeated START condition has been transmitted.	Load SLA+R or	X	0	0	X	As above.
		Load SLA+W	X	0	0	X	SLA+W will be transmitted; the I²C block will be switched to MST/TRX mode.
0x38	Arbitration lost in NOT ACK bit.	No DAT action or	0	0	0	X	I²C-bus will be released; the I²C block will enter slave mode.
		No DAT action	1	0	0	X	A START condition will be transmitted when the bus becomes free.
0x40	SLA+R has been transmitted; ACK has been received.	No DAT action or	0	0	0	0	Data byte will be received; NOT ACK bit will be returned.
		No DAT action	0	0	0	1	Data byte will be received; ACK bit will be returned.
0x48	SLA+R has been transmitted; NOT ACK has been received.	No DAT action or	1	0	0	X	Repeated START condition will be transmitted.
		No DAT action or	0	1	0	X	STOP condition will be transmitted; STO flag will be reset.
		No DAT action	1	1	0	X	STOP condition followed by a START condition will be transmitted; STO flag will be reset.
0x50	Data byte has been received; ACK has been returned.	Read data byte or	0	0	0	0	Data byte will be received; NOT ACK bit will be returned.
		Read data byte	0	0	0	1	Data byte will be received; ACK bit will be returned.
0x58	Data byte has been received; NOT ACK has been returned.	Read data byte or	1	0	0	X	Repeated START condition will be transmitted.
		Read data byte or	0	1	0	X	STOP condition will be transmitted; STO flag will be reset.
		Read data byte	1	1	0	X	STOP condition followed by a START condition will be transmitted; STO flag will be reset.

All information provided in this document is subject to legal disclaimers.

© NXP B.V. 2012. All rights reserved.

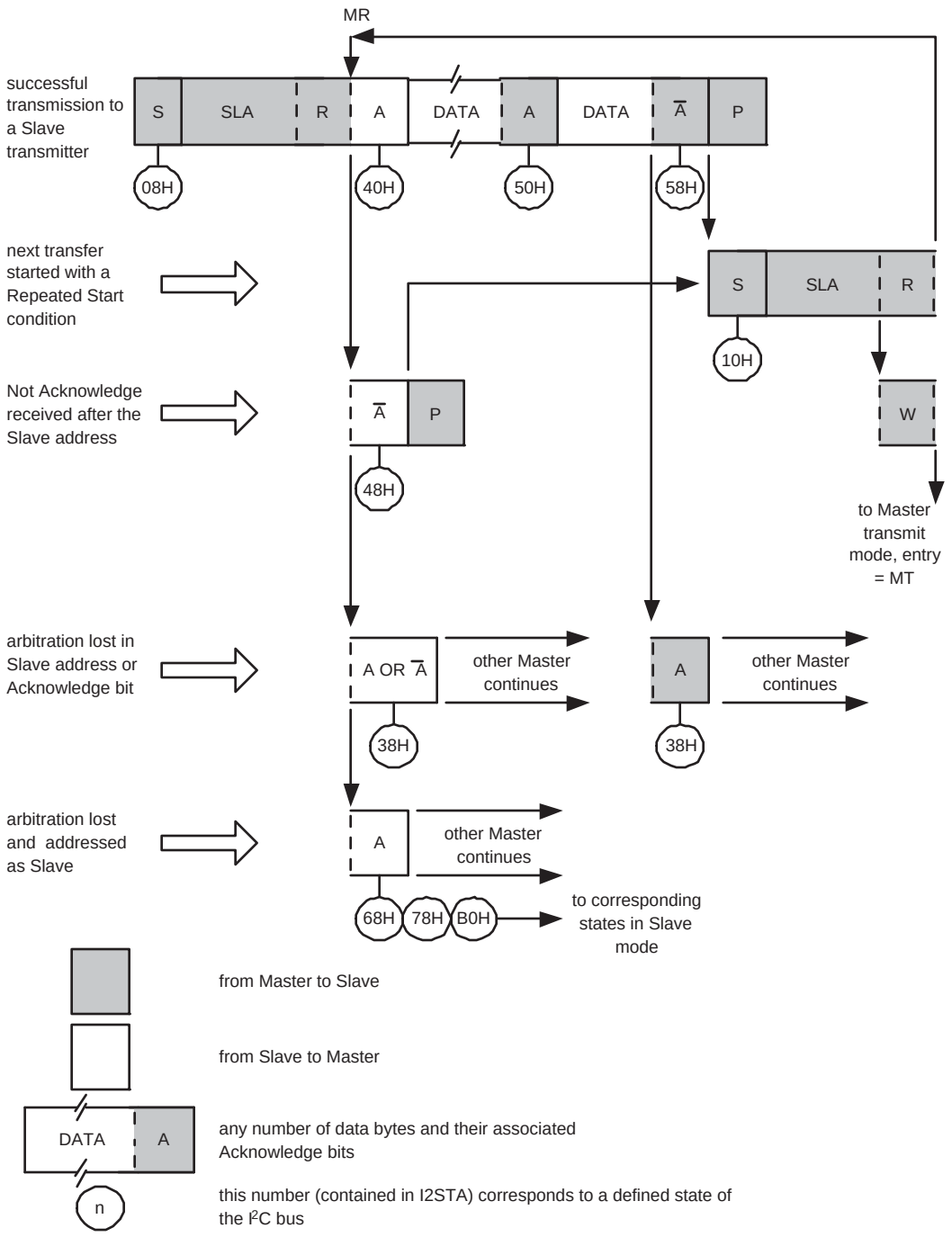

Fig 54. Format and states in the Master Receiver mode

All information provided in this document is subject to legal disclaimers.

© NXP B.V. 2012. All rights reserved.

15.10.3 Slave Receiver mode

In the slave receiver mode, a number of data bytes are received from a master transmitter (see Figure 55). To initiate the slave receiver mode, ADR and CON must be loaded as follows:

Table 237. I2C0ADR and I2C1ADR usage in Slave Receiver mode

Bit	7	6	5	4	3	2	1	0
Symbol	own slave 7-bit address							GC

The upper 7 bits are the address to which the I^2C block will respond when addressed by a master. If the LSB (GC) is set, the I^2C block will respond to the General Call address (0x00); otherwise it ignores the General Call address.

Table 238. I2C0CONSET and I2C1CONSET used to initialize Slave Receiver mode

Bit	7	6	5	4	3	2	1	0
Symbol	-	I2EN	STA	STO	SI	AA	-	-
Value	-	1	0	0	0	1	-	-

The I^2C-bus rate settings do not affect the I^2C block in the slave mode. I2EN must be set to logic 1 to enable the I^2C block. The AA bit must be set to enable the I^2C block to acknowledge its own slave address or the General Call address. STA, STO, and SI must be reset.

When ADR and CON have been initialized, the I^2C block waits until it is addressed by its own slave address followed by the data direction bit which must be “0” (W) for the I^2C block to operate in the slave receiver mode. After its own slave address and the W bit have been received, the serial interrupt flag (SI) is set and a valid status code can be read from STAT. This status code is used to vector to a state service routine. The appropriate action to be taken for each of these status codes is detailed in Table 239. The slave receiver mode may also be entered if arbitration is lost while the I^2C block is in the master mode (see status 0x68 and 0x78).

If the AA bit is reset during a transfer, the I^2C block will return a not acknowledge (logic 1) to SDA after the next received data byte. While AA is reset, the I^2C block does not respond to its own slave address or a General Call address. However, the I^2C-bus is still monitored and address recognition may be resumed at any time by setting AA. This means that the AA bit may be used to temporarily isolate the I^2C block from the I^2C-bus.

All information provided in this document is subject to legal disclaimers.
© NXP B.V. 2012. All rights reserved.

Table 239. Slave Receiver mode

Status Code (STAT)	Status of the I²C-bus and hardware	Application software response					Next action taken by I²C hardware
		To/From DAT	To CON				
			STA	STO	SI	AA	
0x60	Own SLA+W has been received; ACK has been returned.	No DAT action or	X	0	0	0	Data byte will be received and NOT ACK will be returned.
		No DAT action	X	0	0	1	Data byte will be received and ACK will be returned.
0x68	Arbitration lost in SLA+R/W as master; Own SLA+W has been received, ACK returned.	No DAT action or	X	0	0	0	Data byte will be received and NOT ACK will be returned.
		No DAT action	X	0	0	1	Data byte will be received and ACK will be returned.
0x70	General call address (0x00) has been received; ACK has been returned.	No DAT action or	X	0	0	0	Data byte will be received and NOT ACK will be returned.
		No DAT action	X	0	0	1	Data byte will be received and ACK will be returned.
0x78	Arbitration lost in SLA+R/W as master; General call address has been received, ACK has been returned.	No DAT action or	X	0	0	0	Data byte will be received and NOT ACK will be returned.
		No DAT action	X	0	0	1	Data byte will be received and ACK will be returned.
0x80	Previously addressed with own SLV address; DATA has been received; ACK has been returned.	Read data byte or	X	0	0	0	Data byte will be received and NOT ACK will be returned.
		Read data byte	X	0	0	1	Data byte will be received and ACK will be returned.
0x88	Previously addressed with own SLA; DATA byte has been received; NOT ACK has been returned.	Read data byte or	0	0	0	0	Switched to not addressed SLV mode; no recognition of own SLA or General call address.
		Read data byte or	0	0	0	1	Switched to not addressed SLV mode; Own SLA will be recognized; General call address will be recognized if ADR[0] = logic 1.
		Read data byte or	1	0	0	0	Switched to not addressed SLV mode; no recognition of own SLA or General call address. A START condition will be transmitted when the bus becomes free.
		Read data byte	1	0	0	1	Switched to not addressed SLV mode; Own SLA will be recognized; General call address will be recognized if ADR[0] = logic 1. A START condition will be transmitted when the bus becomes free.
0x90	Previously addressed with General Call; DATA byte has been received; ACK has been returned.	Read data byte or	X	0	0	0	Data byte will be received and NOT ACK will be returned.
		Read data byte	X	0	0	1	Data byte will be received and ACK will be returned.

All information provided in this document is subject to legal disclaimers.

© NXP B.V. 2012. All rights reserved.

Table 239. Slave Receiver mode *…continued*

Status Code (STAT)	Status of the I²C-bus and hardware	Application software response					Next action taken by I²C hardware
		To/From DAT	To CON				
			STA	STO	SI	AA	
0x98	Previously addressed with General Call; DATA byte has been received; NOT ACK has been returned.	Read data byte or	0	0	0	0	Switched to not addressed SLV mode; no recognition of own SLA or General call address.
		Read data byte or	0	0	0	1	Switched to not addressed SLV mode; Own SLA will be recognized; General call address will be recognized if ADR[0] = logic 1.
		Read data byte or	1	0	0	0	Switched to not addressed SLV mode; no recognition of own SLA or General call address. A START condition will be transmitted when the bus becomes free.
		Read data byte	1	0	0	1	Switched to not addressed SLV mode; Own SLA will be recognized; General call address will be recognized if ADR[0] = logic 1. A START condition will be transmitted when the bus becomes free.
0xA0	A STOP condition or Repeated START condition has been received while still addressed as SLV/REC or SLV/TRX.	No STDAT action or	0	0	0	0	Switched to not addressed SLV mode; no recognition of own SLA or General call address.
		No STDAT action or	0	0	0	1	Switched to not addressed SLV mode; Own SLA will be recognized; General call address will be recognized if ADR[0] = logic 1.
		No STDAT action or	1	0	0	0	Switched to not addressed SLV mode; no recognition of own SLA or General call address. A START condition will be transmitted when the bus becomes free.
		No STDAT action	1	0	0	1	Switched to not addressed SLV mode; Own SLA will be recognized; General call address will be recognized if ADR[0] = logic 1. A START condition will be transmitted when the bus becomes free.

All information provided in this document is subject to legal disclaimers.

© NXP B.V. 2012. All rights reserved.

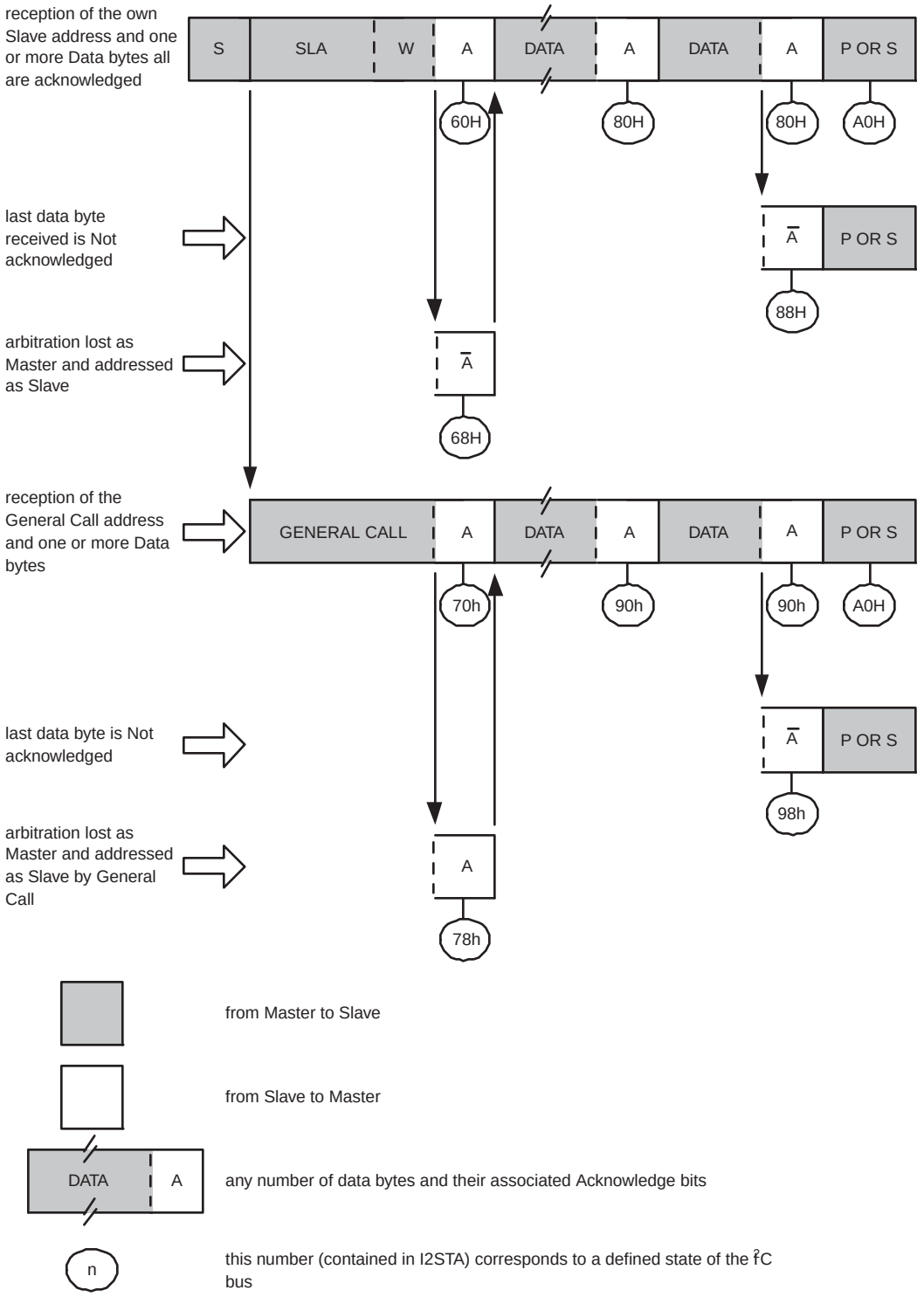

Fig 55. Format and states in the Slave Receiver mode

All information provided in this document is subject to legal disclaimers.

© NXP B.V. 2012. All rights reserved.

15.10.4 Slave Transmitter mode

In the slave transmitter mode, a number of data bytes are transmitted to a master receiver (see Figure 56). Data transfer is initialized as in the slave receiver mode. When ADR and CON have been initialized, the I^2C block waits until it is addressed by its own slave address followed by the data direction bit which must be “1” (R) for the I^2C block to operate in the slave transmitter mode. After its own slave address and the R bit have been received, the serial interrupt flag (SI) is set and a valid status code can be read from STAT. This status code is used to vector to a state service routine, and the appropriate action to be taken for each of these status codes is detailed in Table 240. The slave transmitter mode may also be entered if arbitration is lost while the I^2C block is in the master mode (see state 0xB0).

If the AA bit is reset during a transfer, the I^2C block will transmit the last byte of the transfer and enter state 0xC0 or 0xC8. The I^2C block is switched to the not addressed slave mode and will ignore the master receiver if it continues the transfer. Thus the master receiver receives all 1s as serial data. While AA is reset, the I^2C block does not respond to its own slave address or a General Call address. However, the I^2C-bus is still monitored, and address recognition may be resumed at any time by setting AA. This means that the AA bit may be used to temporarily isolate the I^2C block from the I^2C-bus.

All information provided in this document is subject to legal disclaimers.
© NXP B.V. 2012. All rights reserved.

Table 240. Slave Transmitter mode

Status Code (STAT)	Status of the I²C-bus and hardware	Application software response					Next action taken by I²C hardware
		To/From DAT	To CON				
			STA	STO	SI	AA	
0xA8	Own SLA+R has been received; ACK has been returned.	Load data byte or	X	0	0	0	Last data byte will be transmitted and ACK bit will be received.
		Load data byte	X	0	0	1	Data byte will be transmitted; ACK will be received.
0xB0	Arbitration lost in SLA+R/W as master; Own SLA+R has been received, ACK has been returned.	Load data byte or	X	0	0	0	Last data byte will be transmitted and ACK bit will be received.
		Load data byte	X	0	0	1	Data byte will be transmitted; ACK bit will be received.
0xB8	Data byte in DAT has been transmitted; ACK has been received.	Load data byte or	X	0	0	0	Last data byte will be transmitted and ACK bit will be received.
		Load data byte	X	0	0	1	Data byte will be transmitted; ACK bit will be received.
0xC0	Data byte in DAT has been transmitted; NOT ACK has been received.	No DAT action or	0	0	0	0	Switched to not addressed SLV mode; no recognition of own SLA or General call address.
		No DAT action or	0	0	0	1	Switched to not addressed SLV mode; Own SLA will be recognized; General call address will be recognized if ADR[0] = logic 1.
		No DAT action or	1	0	0	0	Switched to not addressed SLV mode; no recognition of own SLA or General call address. A START condition will be transmitted when the bus becomes free.
		No DAT action	1	0	0	1	Switched to not addressed SLV mode; Own SLA will be recognized; General call address will be recognized if ADR[0] = logic 1. A START condition will be transmitted when the bus becomes free.
0xC8	Last data byte in DAT has been transmitted (AA = 0); ACK has been received.	No DAT action or	0	0	0	0	Switched to not addressed SLV mode; no recognition of own SLA or General call address.
		No DAT action or	0	0	0	1	Switched to not addressed SLV mode; Own SLA will be recognized; General call address will be recognized if ADR[0] = logic 1.
		No DAT action or	1	0	0	0	Switched to not addressed SLV mode; no recognition of own SLA or General call address. A START condition will be transmitted when the bus becomes free.
		No DAT action	1	0	0	01	Switched to not addressed SLV mode; Own SLA will be recognized; General call address will be recognized if ADR.0 = logic 1. A START condition will be transmitted when the bus becomes free.

All information provided in this document is subject to legal disclaimers.

© NXP B.V. 2012. All rights reserved.

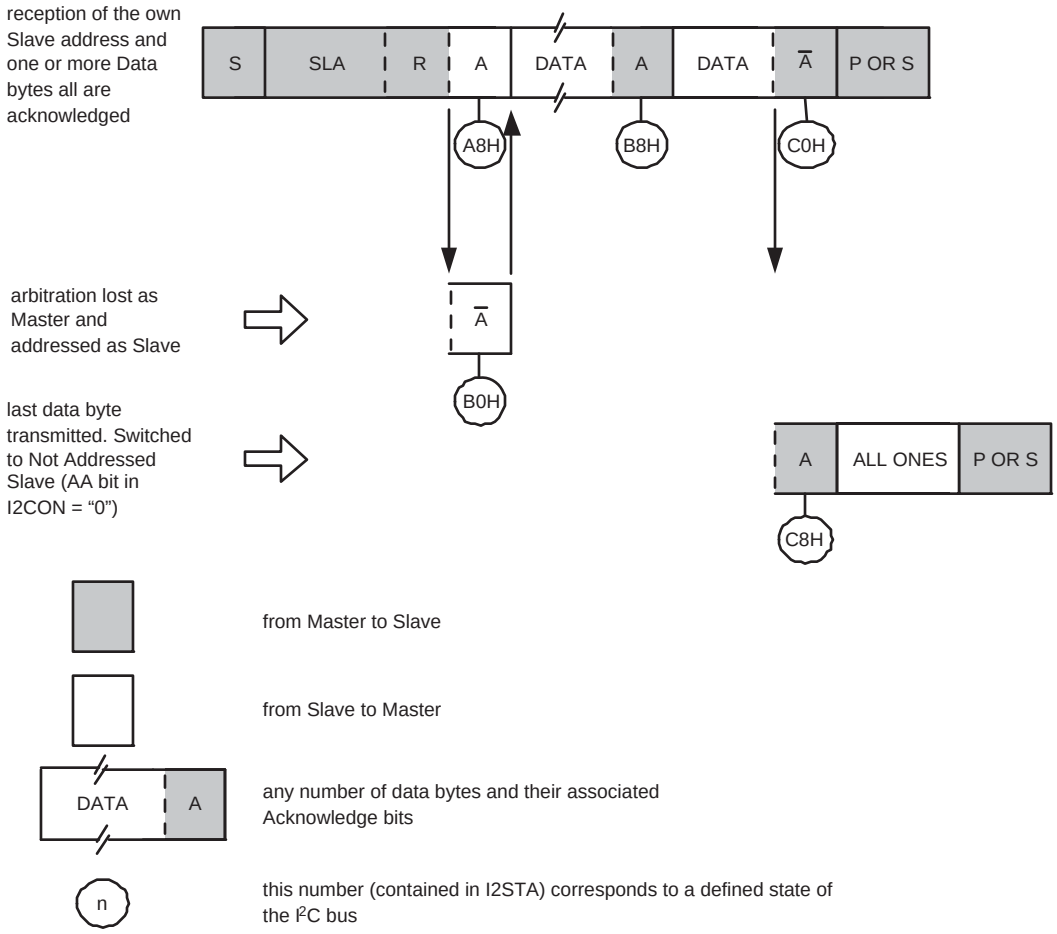

Fig 56. Format and states in the Slave Transmitter mode

15.10.5 Miscellaneous states

There are two STAT codes that do not correspond to a defined I^{2}C hardware state (see Table 241). These are discussed below.

15.10.5.1 STAT = 0xF8

This status code indicates that no relevant information is available because the serial interrupt flag, SI, is not yet set. This occurs between other states and when the I^{2}C block is not involved in a serial transfer.

15.10.5.2 STAT = 0x00

This status code indicates that a bus error has occurred during an I^{2}C serial transfer. A bus error is caused when a START or STOP condition occurs at an illegal position in the format frame. Examples of such illegal positions are during the serial transfer of an address byte, a data byte, or an acknowledge bit. A bus error may also be caused when external interference disturbs the internal I^{2}C block signals. When a bus error occurs, SI is set. To recover from a bus error, the STO flag must be set and SI must be cleared. This

All information provided in this document is subject to legal disclaimers.

© NXP B.V. 2012. All rights reserved.

causes the I²C block to enter the “not addressed” slave mode (a defined state) and to clear the STO flag (no other bits in CON are affected). The SDA and SCL lines are released (a STOP condition is not transmitted).

Table 241. Miscellaneous States

Status Code (STAT)	Status of the I²C-bus and hardware	Application software response					Next action taken by I²C hardware
		To/From DAT	To CON				
			STA	STO	SI	AA	
0xF8	No relevant state information available; SI = 0.	No DAT action	No CON action				Wait or proceed current transfer.
0x00	Bus error during MST or selected slave modes, due to an illegal START or STOP condition. State 0x00 can also occur when interference causes the I²C block to enter an undefined state.	No DAT action	0	1	0	X	Only the internal hardware is affected in the MST or addressed SLV modes. In all cases, the bus is released and the I²C block is switched to the not addressed SLV mode. STO is reset.

15.10.6 Some special cases

The I²C hardware has facilities to handle the following special cases that may occur during a serial transfer:

- Simultaneous Repeated START conditions from two masters
- Data transfer after loss of arbitration
- Forced access to the I²C-bus
- I²C-bus obstructed by a LOW level on SCL or SDA
- Bus error

15.10.6.1 Simultaneous Repeated START conditions from two masters

A Repeated START condition may be generated in the master transmitter or master receiver modes. A special case occurs if another master simultaneously generates a Repeated START condition (see Figure 57). Until this occurs, arbitration is not lost by either master since they were both transmitting the same data.

If the I²C hardware detects a Repeated START condition on the I²C-bus before generating a Repeated START condition itself, it will release the bus, and no interrupt request is generated. If another master frees the bus by generating a STOP condition, the I²C block will transmit a normal START condition (state 0x08), and a retry of the total serial data transfer can commence.

All information provided in this document is subject to legal disclaimers.
© NXP B.V. 2012. All rights reserved.

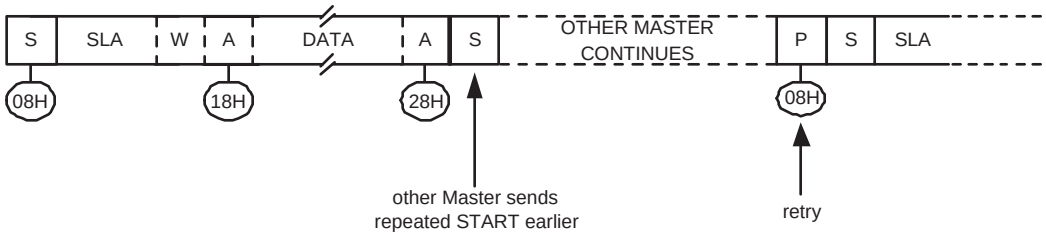

Fig 57. Simultaneous Repeated START conditions from two masters

15.10.6.2 Data transfer after loss of arbitration

Arbitration may be lost in the master transmitter and master receiver modes (see Figure 51). Loss of arbitration is indicated by the following states in STAT; 0x38, 0x68, 0x78, and 0xB0 (see Figure 53 and Figure 54).

If the STA flag in CON is set by the routines which service these states, then, if the bus is free again, a START condition (state 0x08) is transmitted without intervention by the CPU, and a retry of the total serial transfer can commence.

15.10.6.3 Forced access to the I²C-bus

In some applications, it may be possible for an uncontrolled source to cause a bus hang-up. In such situations, the problem may be caused by interference, temporary interruption of the bus or a temporary short-circuit between SDA and SCL.

If an uncontrolled source generates a superfluous START or masks a STOP condition, then the I²C-bus stays busy indefinitely. If the STA flag is set and bus access is not obtained within a reasonable amount of time, then a forced access to the I²C-bus is possible. This is achieved by setting the STO flag while the STA flag is still set. No STOP condition is transmitted. The I²C hardware behaves as if a STOP condition was received and is able to transmit a START condition. The STO flag is cleared by hardware (see Figure 58).

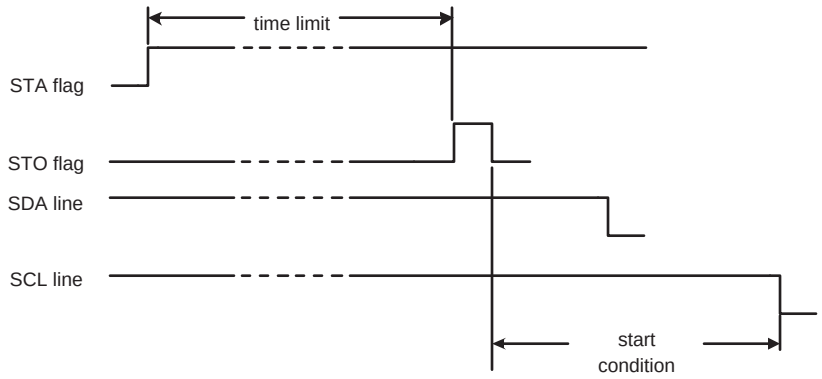

Fig 58. Forced access to a busy I²C-bus

All information provided in this document is subject to legal disclaimers.

© NXP B.V. 2012. All rights reserved.

15.10.6.4 I²C-bus obstructed by a LOW level on SCL or SDA

An I²C-bus hang-up can occur if either the SDA or SCL line is held LOW by any device on the bus. If the SCL line is obstructed (pulled LOW) by a device on the bus, no further serial transfer is possible, and the problem must be resolved by the device that is pulling the SCL bus line LOW.

Typically, the SDA line may be obstructed by another device on the bus that has become out of synchronization with the current bus master by either missing a clock, or by sensing a noise pulse as a clock. In this case, the problem can be solved by transmitting additional clock pulses on the SCL line (see Figure 59). The I²C interface does not include a dedicated time-out timer to detect an obstructed bus, but this can be implemented using another timer in the system. When detected, software can force clocks (up to 9 may be required) on SCL until SDA is released by the offending device. At that point, the slave may still be out of synchronization, so a START should be generated to insure that all I²C peripherals are synchronized.

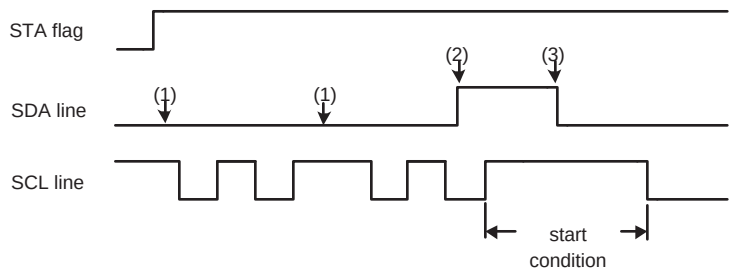

(1) Unsuccessful attempt to send a START condition.

(2) SDA line is released.

(3) Successful attempt to send a START condition. State 08H is entered.

Fig 59. Recovering from a bus obstruction caused by a LOW level on SDA

15.10.6.5 Bus error

A bus error occurs when a START or STOP condition is detected at an illegal position in the format frame. Examples of illegal positions are during the serial transfer of an address byte, a data bit, or an acknowledge bit.

The I²C hardware only reacts to a bus error when it is involved in a serial transfer either as a master or an addressed slave. When a bus error is detected, the I²C block immediately switches to the not addressed slave mode, releases the SDA and SCL lines, sets the interrupt flag, and loads the status register with 0x00. This status code may be used to vector to a state service routine which either attempts the aborted serial transfer again or simply recovers from the error condition as shown in Table 241.

15.10.7 I²C state service routines

This section provides examples of operations that must be performed by various I²C state service routines. This includes:

- Initialization of the I²C block after a Reset.
- I²C Interrupt Service
- The 26 state service routines providing support for all four I²C operating modes.

All information provided in this document is subject to legal disclaimers.

© NXP B.V. 2012. All rights reserved.

15.10.8 Initialization

In the initialization example, the I^{2}C block is enabled for both master and slave modes. For each mode, a buffer is used for transmission and reception. The initialization routine performs the following functions:

- ADR is loaded with the part's own slave address and the General Call bit (GC)
- The I^{2}C interrupt enable and interrupt priority bits are set
- The slave mode is enabled by simultaneously setting the I2EN and AA bits in CON and the serial clock frequency (for master modes) is defined by is defined by loading the SCLH and SCLL registers. The master routines must be started in the main program.

The I^{2}C hardware now begins checking the I^{2}C-bus for its own slave address and General Call. If the General Call or the own slave address is detected, an interrupt is requested and STAT is loaded with the appropriate state information.

15.10.9 I^{2}C interrupt service

When the I^{2}C interrupt is entered, STAT contains a status code which identifies one of the 26 state services to be executed.

15.10.10 The state service routines

Each state routine is part of the I^{2}C interrupt routine and handles one of the 26 states.

15.10.11 Adapting state services to an application

The state service examples show the typical actions that must be performed in response to the 26 I^{2}C state codes. If one or more of the four I^{2}C operating modes are not used, the associated state services can be omitted, as long as care is taken that the those states can never occur.

In an application, it may be desirable to implement some kind of time-out during I^{2}C operations, in order to trap an inoperative bus or a lost service routine.

15.11 Software example

15.11.1 Initialization routine

Example to initialize I^{2}C Interface as a Slave and/or Master.

1. Load ADR with own Slave Address, enable General Call recognition if needed.
2. Enable I^{2}C interrupt.
3. Write 0x44 to CONSET to set the I2EN and AA bits, enabling Slave functions. For Master only functions, write 0x40 to CONSET.

15.11.2 Start Master Transmit function

Begin a Master Transmit operation by setting up the buffer, pointer, and data count, then initiating a START.

1. Initialize Master data counter.

All information provided in this document is subject to legal disclaimers.
© NXP B.V. 2012. All rights reserved.

2. Set up the Slave Address to which data will be transmitted, and add the Write bit.
3. Write 0x20 to CONSET to set the STA bit.
4. Set up data to be transmitted in Master Transmit buffer.
5. Initialize the Master data counter to match the length of the message being sent.
6. Exit

15.11.3 Start Master Receive function

Begin a Master Receive operation by setting up the buffer, pointer, and data count, then initiating a START.

1. Initialize Master data counter.
2. Set up the Slave Address to which data will be transmitted, and add the Read bit.
3. Write 0x20 to CONSET to set the STA bit.
4. Set up the Master Receive buffer.
5. Initialize the Master data counter to match the length of the message to be received.
6. Exit

15.11.4 I^2C interrupt routine

Determine the I^2C state and which state routine will be used to handle it.

1. Read the I^2C status from STA.
2. Use the status value to branch to one of 26 possible state routines.

15.11.5 Non mode specific states

15.11.5.1 State: 0x00

Bus Error. Enter not addressed Slave mode and release bus.

1. Write 0x14 to CONSET to set the STO and AA bits.
2. Write 0x08 to CONCLR to clear the SI flag.
3. Exit

15.11.5.2 Master States

State 08 and State 10 are for both Master Transmit and Master Receive modes. The R/W bit decides whether the next state is within Master Transmit mode or Master Receive mode.

15.11.5.3 State: 0x08

A START condition has been transmitted. The Slave Address + R/W bit will be transmitted, an ACK bit will be received.

1. Write Slave Address with R/W bit to DAT.
2. Write 0x04 to CONSET to set the AA bit.
3. Write 0x08 to CONCLR to clear the SI flag.
4. Set up Master Transmit mode data buffer.

All information provided in this document is subject to legal disclaimers.
© NXP B.V. 2012. All rights reserved.

5. Set up Master Receive mode data buffer.
6. Initialize Master data counter.
7. Exit

15.11.5.4 State: 0x10

A Repeated START condition has been transmitted. The Slave Address + R/W bit will be transmitted, an ACK bit will be received.

1. Write Slave Address with R/W bit to DAT.
2. Write 0x04 to CONSET to set the AA bit.
3. Write 0x08 to CONCLR to clear the SI flag.
4. Set up Master Transmit mode data buffer.
5. Set up Master Receive mode data buffer.
6. Initialize Master data counter.
7. Exit

15.11.6 Master Transmitter states

15.11.6.1 State: 0x18

Previous state was State 8 or State 10, Slave Address + Write has been transmitted, ACK has been received. The first data byte will be transmitted, an ACK bit will be received.

1. Load DAT with first data byte from Master Transmit buffer.
2. Write 0x04 to CONSET to set the AA bit.
3. Write 0x08 to CONCLR to clear the SI flag.
4. Increment Master Transmit buffer pointer.
5. Exit

15.11.6.2 State: 0x20

Slave Address + Write has been transmitted, NOT ACK has been received. A STOP condition will be transmitted.

1. Write 0x14 to CONSET to set the STO and AA bits.
2. Write 0x08 to CONCLR to clear the SI flag.
3. Exit

15.11.6.3 State: 0x28

Data has been transmitted, ACK has been received. If the transmitted data was the last data byte then transmit a STOP condition, otherwise transmit the next data byte.

1. Decrement the Master data counter, skip to step 5 if not the last data byte.
2. Write 0x14 to CONSET to set the STO and AA bits.
3. Write 0x08 to CONCLR to clear the SI flag.
4. Exit
5. Load DAT with next data byte from Master Transmit buffer.

All information provided in this document is subject to legal disclaimers.
© NXP B.V. 2012. All rights reserved.

6. Write 0x04 to CONSET to set the AA bit.
7. Write 0x08 to CONCLR to clear the SI flag.
8. Increment Master Transmit buffer pointer
9. Exit

15.11.6.4 State: 0x30

Data has been transmitted, NOT ACK received. A STOP condition will be transmitted.

1. Write 0x14 to CONSET to set the STO and AA bits.
2. Write 0x08 to CONCLR to clear the SI flag.
3. Exit

15.11.6.5 State: 0x38

Arbitration has been lost during Slave Address + Write or data. The bus has been released and not addressed Slave mode is entered. A new START condition will be transmitted when the bus is free again.

1. Write 0x24 to CONSET to set the STA and AA bits.
2. Write 0x08 to CONCLR to clear the SI flag.
3. Exit

15.11.7 Master Receive states

15.11.7.1 State: 0x40

Previous state was State 08 or State 10. Slave Address + Read has been transmitted, ACK has been received. Data will be received and ACK returned.

1. Write 0x04 to CONSET to set the AA bit.
2. Write 0x08 to CONCLR to clear the SI flag.
3. Exit

15.11.7.2 State: 0x48

Slave Address + Read has been transmitted, NOT ACK has been received. A STOP condition will be transmitted.

1. Write 0x14 to CONSET to set the STO and AA bits.
2. Write 0x08 to CONCLR to clear the SI flag.
3. Exit

15.11.7.3 State: 0x50

Data has been received, ACK has been returned. Data will be read from DAT. Additional data will be received. If this is the last data byte then NOT ACK will be returned, otherwise ACK will be returned.

1. Read data byte from DAT into Master Receive buffer.
2. Decrement the Master data counter, skip to step 5 if not the last data byte.
3. Write 0x0C to CONCLR to clear the SI flag and the AA bit.

All information provided in this document is subject to legal disclaimers.
© NXP B.V. 2012. All rights reserved.

4. Exit
5. Write 0x04 to CONSET to set the AA bit.
6. Write 0x08 to CONCLR to clear the SI flag.
7. Increment Master Receive buffer pointer
8. Exit

15.11.7.4 State: 0x58

Data has been received, NOT ACK has been returned. Data will be read from DAT. A STOP condition will be transmitted.

1. Read data byte from DAT into Master Receive buffer.
2. Write 0x14 to CONSET to set the STO and AA bits.
3. Write 0x08 to CONCLR to clear the SI flag.
4. Exit

15.11.8 Slave Receiver states

15.11.8.1 State: 0x60

Own Slave Address + Write has been received, ACK has been returned. Data will be received and ACK returned.

1. Write 0x04 to CONSET to set the AA bit.
2. Write 0x08 to CONCLR to clear the SI flag.
3. Set up Slave Receive mode data buffer.
4. Initialize Slave data counter.
5. Exit

15.11.8.2 State: 0x68

Arbitration has been lost in Slave Address and R/W bit as bus Master. Own Slave Address + Write has been received, ACK has been returned. Data will be received and ACK will be returned. STA is set to restart Master mode after the bus is free again.

1. Write 0x24 to CONSET to set the STA and AA bits.
2. Write 0x08 to CONCLR to clear the SI flag.
3. Set up Slave Receive mode data buffer.
4. Initialize Slave data counter.
5. Exit.

15.11.8.3 State: 0x70

General call has been received, ACK has been returned. Data will be received and ACK returned.

1. Write 0x04 to CONSET to set the AA bit.
2. Write 0x08 to CONCLR to clear the SI flag.
3. Set up Slave Receive mode data buffer.

All information provided in this document is subject to legal disclaimers.
© NXP B.V. 2012. All rights reserved.

4. Initialize Slave data counter.
5. Exit

15.11.8.4 State: 0x78

Arbitration has been lost in Slave Address + R/W bit as bus Master. General call has been received and ACK has been returned. Data will be received and ACK returned. STA is set to restart Master mode after the bus is free again.

1. Write 0x24 to CONSET to set the STA and AA bits.
2. Write 0x08 to CONCLR to clear the SI flag.
3. Set up Slave Receive mode data buffer.
4. Initialize Slave data counter.
5. Exit

15.11.8.5 State: 0x80

Previously addressed with own Slave Address. Data has been received and ACK has been returned. Additional data will be read.

1. Read data byte from DAT into the Slave Receive buffer.
2. Decrement the Slave data counter, skip to step 5 if not the last data byte.
3. Write 0x0C to CONCLR to clear the SI flag and the AA bit.
4. Exit.
5. Write 0x04 to CONSET to set the AA bit.
6. Write 0x08 to CONCLR to clear the SI flag.
7. Increment Slave Receive buffer pointer.
8. Exit

15.11.8.6 State: 0x88

Previously addressed with own Slave Address. Data has been received and NOT ACK has been returned. Received data will not be saved. Not addressed Slave mode is entered.

1. Write 0x04 to CONSET to set the AA bit.
2. Write 0x08 to CONCLR to clear the SI flag.
3. Exit

15.11.8.7 State: 0x90

Previously addressed with General Call. Data has been received, ACK has been returned. Received data will be saved. Only the first data byte will be received with ACK. Additional data will be received with NOT ACK.

1. Read data byte from DAT into the Slave Receive buffer.
2. Write 0x0C to CONCLR to clear the SI flag and the AA bit.
3. Exit

All information provided in this document is subject to legal disclaimers.
© NXP B.V. 2012. All rights reserved.

15.11.8.8 State: 0x98

Previously addressed with General Call. Data has been received, NOT ACK has been returned. Received data will not be saved. Not addressed Slave mode is entered.

1. Write 0x04 to CONSET to set the AA bit.
2. Write 0x08 to CONCLR to clear the SI flag.
3. Exit

15.11.8.9 State: 0xA0

A STOP condition or Repeated START has been received, while still addressed as a Slave. Data will not be saved. Not addressed Slave mode is entered.

1. Write 0x04 to CONSET to set the AA bit.
2. Write 0x08 to CONCLR to clear the SI flag.
3. Exit

15.11.9 Slave Transmitter states

15.11.9.1 State: 0xA8

Own Slave Address + Read has been received, ACK has been returned. Data will be transmitted, ACK bit will be received.

1. Load DAT from Slave Transmit buffer with first data byte.
2. Write 0x04 to CONSET to set the AA bit.
3. Write 0x08 to CONCLR to clear the SI flag.
4. Set up Slave Transmit mode data buffer.
5. Increment Slave Transmit buffer pointer.
6. Exit

15.11.9.2 State: 0xB0

Arbitration lost in Slave Address and R/W bit as bus Master. Own Slave Address + Read has been received, ACK has been returned. Data will be transmitted, ACK bit will be received. STA is set to restart Master mode after the bus is free again.

1. Load DAT from Slave Transmit buffer with first data byte.
2. Write 0x24 to CONSET to set the STA and AA bits.
3. Write 0x08 to CONCLR to clear the SI flag.
4. Set up Slave Transmit mode data buffer.
5. Increment Slave Transmit buffer pointer.
6. Exit

15.11.9.3 State: 0xB8

Data has been transmitted, ACK has been received. Data will be transmitted, ACK bit will be received.

1. Load DAT from Slave Transmit buffer with data byte.

All information provided in this document is subject to legal disclaimers.
© NXP B.V. 2012. All rights reserved.

2. Write 0x04 to CONSET to set the AA bit.
3. Write 0x08 to CONCLR to clear the SI flag.
4. Increment Slave Transmit buffer pointer.
5. Exit

15.11.9.4 State: 0xC0

Data has been transmitted, NOT ACK has been received. Not addressed Slave mode is entered.

1. Write 0x04 to CONSET to set the AA bit.
2. Write 0x08 to CONCLR to clear the SI flag.
3. Exit.

15.11.9.5 State: 0xC8

The last data byte has been transmitted, ACK has been received. Not addressed Slave mode is entered.

1. Write 0x04 to CONSET to set the AA bit.
2. Write 0x08 to CONCLR to clear the SI flag.
3. Exit

All information provided in this document is subject to legal disclaimers.
© NXP B.V. 2012. All rights reserved.

16.1 How to read this chapter

The C_CAN block is available in LPC11Cxx parts only (LPC11C00 series).

The LPC11C22 and LPC11C24 parts include an on-chip, high-speed transceiver. For these parts, the CAN_RXD and CAN_TXD signals are connected internally to the on-chip transceiver, and the transceiver signals are pinned out (see Table 243).

16.2 Basic configuration

The C_CAN is configured using the following registers:

1. Power: In the SYSAHBCLKCTRL register, set bit 17 (Table 21).
2. Clocking: For an accurate peripheral clock to the C_CAN block, select the system oscillator either as the main clock (Table 18) or as input to the system PLL (Table 16). Do not select the IRC if C_CAN baud rates above 100 kbit/s are required.
3. Reset: Before accessing the C_CAN block, ensure that the CAN_RST_N bit (bit 3) in the PRESETCTRL register (Table 9) is set to 1. This de-asserts the reset signal to the C_CAN block.

The peripheral clock to the C_CAN (the C_CAN system clock) and to the programmable C_CAN clock divider (see Table 274) is provided by the system clock (seeTable 21). This clock can be disabled through bit 17 in the SYSAHBCLKCTRL register for power savings.

Remark: If C_CAN baudrates above 100 kbit/s are required, the system oscillator must be selected as the clock source for the system clock. For lower baudrates, the IRC may also be used as clock source.

16.3 Features

- Conforms to protocol version 2.0 parts A and B.
- Supports bit rate of up to 1 Mbit/s.
- Supports 32 Message Objects.
- Each Message Object has its own identifier mask.
- Provides programmable FIFO mode (concatenation of Message Objects).
- Provides maskable interrupts.
- Supports Disabled Automatic Retransmission (DAR) mode for time-triggered CAN applications.
- Provides programmable loop-back mode for self-test operation.

All information provided in this document is subject to legal disclaimers.
© NXP B.V. 2012. All rights reserved.

16.4 General description

Controller Area Network (CAN) is the definition of a high performance communication protocol for serial data communication. The C_CAN controller is designed to provide a full implementation of the CAN protocol according to the CAN Specification Version 2.0B. The C_CAN controller allows to build powerful local networks with low-cost multiplex wiring by supporting distributed real-time control with a very high level of security.

The CAN controller consists of a CAN core, message RAM, a message handler, control registers, and the APB interface.

For communication on a CAN network, individual Message Objects are configured. The Message Objects and Identifier Masks for acceptance filtering of received messages are stored in the Message RAM.

All functions concerning the handling of messages are implemented in the Message Handler. Those functions are the acceptance filtering, the transfer of messages between the CAN Core and the Message RAM, and the handling of transmission requests as well as the generation of the module interrupt.

The register set of the CAN controller can be accessed directly by an external CPU via the APB bus. These registers are used to control/configure the CAN Core and the Message Handler and to access the Message RAM.

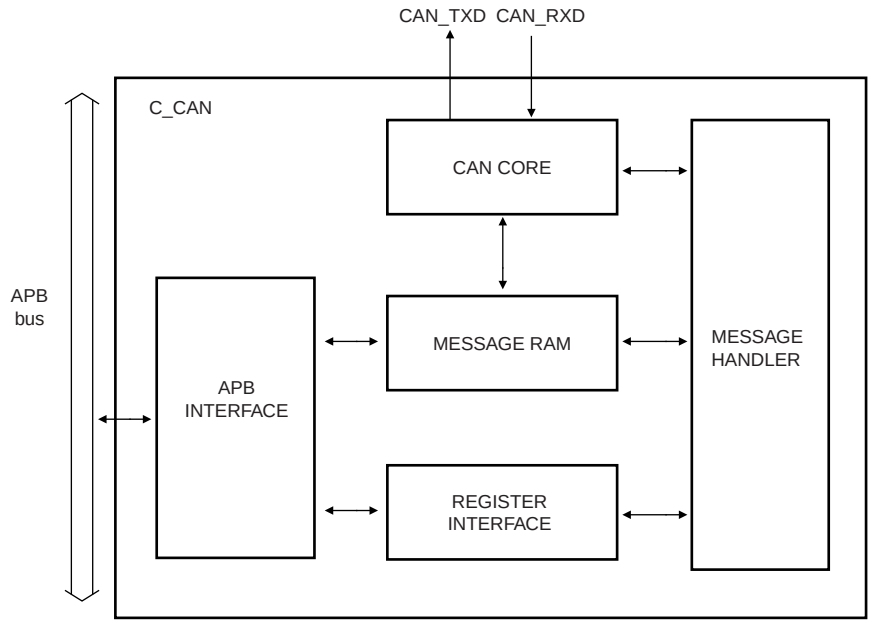

Fig 60. C_CAN block diagram

All information provided in this document is subject to legal disclaimers.
© NXP B.V. 2012. All rights reserved.

16.5 Pin description

Table 242. CAN pin description (LPC11C12/C14)

Pin	Type	Description
CAN_TXD	O	C_CAN transmit output
CAN_RXD	I	C_CAN receive input

Table 243. CAN pin description (LPC11C22/C24)

Pin	Type	Description
CANL	I/O	LOW-level CAN bus line.
CANH	I/O	HIGH-level CAN bus line.
STB	I	Silent mode control input for CAN transceiver (LOW = Normal mode, HIGH = silent mode).
VDD_CAN	-	Supply voltage for I/O level of CAN transceiver.
V_{CC}	-	Supply voltage for CAN transceiver.
GND	-	Ground for CAN transceiver.

16.6 Register description

The C_CAN registers are organized as 32-bit wide registers.

The two sets of interface registers (IF1 and IF2) control the CPU access to the Message RAM. They buffer the data to be transferred to and from the RAM, avoiding conflicts between CPU accesses and message reception/transmission.

Table 244. Register overview: CCAN (base address 0x4005 0000)

Name	Access	Address offset	Description	Reset value
CANCNTL	R/W	0x000	CAN control	0x0001
CANSTAT	R/W	0x004	Status register	0x0000
CANEC	RO	0x008	Error counter	0x0000
CANBT	R/W	0x00C	Bit timing register	0x2301
CANINT	RO	0x010	Interrupt register	0x0000
CANTEST	R/W	0x014	Test register	-
CANBRPE	R/W	0x018	Baud rate prescaler extension register	0x0000
-	-	0x01C	Reserved	-
CANIF1_CMDREQ	R/W	0x020	Message interface 1 command request	0x0001
CANIF1_CMDMSK_W	R/W	0x024	Message interface 1 command mask (write direction)	0x0000
CANIF1_CMDMSK_R	R/W	0x024	Message interface 1 command mask (read direction)	0x0000
CANIF1_MSK1	R/W	0x028	Message interface 1 mask 1	0xFFFF
CANIF1_MSK2	R/W	0x02C	Message interface 1 mask 2	0xFFFF
CANIF1_ARB1	R/W	0x030	Message interface 1 arbitration 1	0x0000
CANIF1_ARB2	R/W	0x034	Message interface 1 arbitration 2	0x0000
CANIF1_MCTRL	R/W	0x038	Message interface 1 message control	0x0000

All information provided in this document is subject to legal disclaimers.

© NXP B.V. 2012. All rights reserved.

Table 244. Register overview: CCAN (base address 0x4005 0000)

Name	Access	Address offset	Description	Reset value
CANIF1_DA1	R/W	0x03C	Message interface 1 data A1	0x0000
CANIF1_DA2	R/W	0x040	Message interface 1 data A2	0x0000
CANIF1_DB1	R/W	0x044	Message interface 1 data B1	0x0000
CANIF1_DB2	R/W	0x048	Message interface 1 data B2	0x0000
-	-	0x04C - 0x07C	Reserved	-
CANIF2_CMDREQ	R/W	0x080	Message interface 2 command request	0x0001
CANIF2_CMDMSK_W	R/W	0x084	Message interface 2 command mask (write direction)	0x0000
CANIF2_CMDMSK_R	R/W	0x084	Message interface 2 command mask (read direction)	0x0000
CANIF2_MSK1	R/W	0x088	Message interface 2 mask 1	0xFFFF
CANIF2_MSK2	R/W	0x08C	Message interface 2 mask 2	0xFFFF
CANIF2_ARB1	R/W	0x090	Message interface 2 arbitration 1	0x0000
CANIF2_ARB2	R/W	0x094	Message interface 2 arbitration 2	0x0000
CANIF2_MCTRL	R/W	0x098	Message interface 2 message control	0x0000
CANIF2_DA1	R/W	0x09C	Message interface 2 data A1	0x0000
CANIF2_DA2	R/W	0x0A0	Message interface 2 data A2	0x0000
CANIF2_DB1	R/W	0x0A4	Message interface 2 data B1	0x0000
CANIF2_DB2	R/W	0x0A8	Message interface 2 data B2	0x0000
-	-	0x0AC - 0x0FC	Reserved	-
CANTXREQ1	RO	0x100	Transmission request 1	0x0000
CANTXREQ2	RO	0x104	Transmission request 2	0x0000
-	-	0x108 - 0x11C	Reserved	-
CANND1	RO	0x120	New data 1	0x0000
CANND2	RO	0x124	New data 2	0x0000
-	-	0x128 - 0x13C	Reserved	-
CANIR1	RO	0x140	Interrupt pending 1	0x0000
CANIR2	RO	0x144	Interrupt pending 2	0x0000
-	-	0x148 - 0x15C	Reserved	-
CANMSGV1	RO	0x160	Message valid 1	0x0000
CANMSGV2	RO	0x164	Message valid 2	0x0000
-	-	0x168 - 0x17C	Reserved	-
CANCLKDIV	R/W	0x180	Can clock divider register	0x0000

All information provided in this document is subject to legal disclaimers.

© NXP B.V. 2012. All rights reserved.

16.6.1 CAN protocol registers

16.6.1.1 CAN control register

The reset value 0x0001 of the CANCTRL register enables initialization by software (INIT = 1). The C_CAN does not influence the CAN bus until the CPU resets the INIT bit to 0.

Table 245. CAN control registers (CANCNTL, address 0x4005 0000) bit description

Bit	Symbol	Value	Description	Reset value	Access
0	INIT		Initialization	1	R/W
		0	Normal operation.		
		1	Initialization is started. On reset, software needs to initialize the CAN controller.		
1	IE		Module interrupt enable	0	R/W
		0	Disable CAN interrupts. The interrupt line is always HIGH.		
		1	Enable CAN interrupts. The interrupt line is set to LOW and remains LOW until all pending interrupts are cleared.		
2	SIE		Status change interrupt enable	0	R/W
		0	Disable status change interrupts. No status change interrupt will be generated.		
		1	Enable status change interrupts. A status change interrupt will be generated when a message transfer is successfully completed or a CAN bus error is detected.		
3	EIE		Error interrupt enable	0	R/W
		0	Disable error interrupt. No error status interrupt will be generated.		
		1	Enable error interrupt. A change in the bits BOFF or EWARN in the CANSTAT registers will generate an interrupt.		
4	-	-	reserved	0	-
5	DAR		Disable automatic retransmission	0	R/W
		0	Automatic retransmission of disturbed messages enabled.		
		1	Automatic retransmission disabled.		
6	CCE		Configuration change enable	0	R/W
		0	The CPU has no write access to the bit timing register.		
		1	The CPU has write access to the CANBT register while the INIT bit is one.		
7	TEST		Test mode enable	0	R/W
		0	Normal operation.		
		1	Test mode.		
31:8	-		reserved	-	-

All information provided in this document is subject to legal disclaimers.

© NXP B.V. 2012. All rights reserved.

Remark: The busoff recovery sequence (see *CAN Specification Rev. 2.0*) cannot be shortened by setting or resetting the INIT bit. If the device goes into busoff state, it will set INIT, stopping all bus activities. Once INIT has been cleared by the CPU, the device will then wait for 129 occurrences of Bus Idle (129 × 11 consecutive HIGH/recessive bits) before resuming normal operations. At the end of the busoff recovery sequence, the Error Management Counters will be reset.

During the waiting time after the resetting of INIT, each time a sequence of 11 HIGH/recessive bits has been monitored, a Bit0Error code is written to the Status Register CANSTAT, enabling the CPU to monitor the proceeding of the busoff recovery sequence and to determine whether the CAN bus is stuck at LOW/dominant or continuously disturbed.

16.6.1.2 CAN status register

A status interrupt is generated by bits BOFF, EWARN, RXOK, TXOK, or LEC. BOFF and EWARN generate an error interrupt, and RXOK, TXOK, and LEC generate a status change interrupt if EIE and SIE respectively are set to enabled in the CANCTRL register.

A change of bit EPASS and a write to RXOK, TXOK, or LEC will never create a status interrupt.

Reading the CANSTAT register will clear the Status Interrupt value (0x8000) in the CANIR register.

All information provided in this document is subject to legal disclaimers.
© NXP B.V. 2012. All rights reserved.

Table 246. CAN status register (CANSTAT, address 0x4005 0004) bit description

Bit	Symbol	Value	Description	Reset value	Access
2:0	LEC		Last error code Type of the last error to occur on the CAN bus.The LEC field holds a code which indicates the type of the last error to occur on the CAN bus. This field will be cleared to ‘0’ when a message has been transferred (reception or transmission) without error. The unused code ‘111’ may be written by the CPU to check for updates.	000	R/W
		0x0	**No error**.		
		0x1	**Stuff error**: More than 5 equal bits in a sequence have occurred in a part of a received message where this is not allowed.		
		0x2	**Form error**: A fixed format part of a received frame has the wrong format.		
		0x3	**AckError**: The message this CAN core transmitted was not acknowledged.		
		0x4	**Bit1Error**: During the transmission of a message (with the exception of the arbitration field), the device wanted to send a HIGH/recessive level (bit of logical value ‘1’), but the monitored bus value was LOW/dominant.		
		0x5	**Bit0Error**: During the transmission of a message (or acknowledge bit, or active error flag, or overload flag), the device wanted to send a LOW/dominant level (data or identifier bit logical value ‘0’), but the monitored Bus value was HIGH/recessive. During busoff recovery this status is set each time a sequence of 11 HIGH/recessive bits has been monitored. This enables the CPU to monitor the proceeding of the busoff recovery sequence (indicating the bus is not stuck at LOW/dominant or continuously disturbed).		
		0x6	**CRCError**: The CRC checksum was incorrect in the message received.		
		0x7	**Unused:** No CAN bus event was detected (written by the CPU).		
3	TXOK		Transmitted a message successfully This bit must be reset by the CPU. It is never reset by the CAN controller.	0	R/W
		0	Since this bit was last reset by the CPU, no message has been successfully transmitted.		
		1	Since this bit was last reset by the CPU, a message has been successfully transmitted (error free and acknowledged by at least one other node).		
4	RXOK		Received a message successfully This bit must be reset by the CPU. It is never reset by the CAN controller.	0	R/W
		0	Since this bit was last reset by the CPU, no message has been successfully received.		
		1	Since this bit was last set to zero by the CPU, a message has been successfully received independent of the result of acceptance filtering.		
5	EPASS		Error passive	0	RO
		0	The CAN controller is in the error active state.		
		1	The CAN controller is in the error passive state as defined in the *CAN 2.0 specification*.		

All information provided in this document is subject to legal disclaimers.

© NXP B.V. 2012. All rights reserved.

Table 246. CAN status register (CANSTAT, address 0x4005 0004) bit description
…continued

Bit	Symbol	Value	Description	Reset value	Access
6	EWARN		Warning status	0	RO
		0	Both error counters are below the error warning limit of 96.		
		1	At least one of the error counters in the EC has reached the error warning limit of 96.		
7	BOFF		Busoff status	0	RO
		0	The CAN module is not in busoff.		
		1	The CAN controller is in busoff state.		
31:8	-	-	reserved		

16.6.1.3 CAN error counter

Table 247. CAN error counter (CANEC, address 0x4005 0008) bit description

Bit	Symbol	Value	Description	Reset value	Access
7:0	TEC[7:0]		Transmit error counter Current value of the transmit error counter (maximum value 255)	0	RO
14:8	REC[6:0]		Receive error counter Current value of the receive error counter (maximum value 127).	-	RO
15	RP		Receive error passive	-	RO
		0	The receive counter is below the error passive level.		
		1	The receive counter has reached the error passive level as defined in the *CAN2.0 specification*.		
31:16	-	-	Reserved	-	-

All information provided in this document is subject to legal disclaimers.
© NXP B.V. 2012. All rights reserved.

16.6.1.4 CAN bit timing register

Table 248. CAN bit timing register (CANBT, address 0x4005 000C) bit description

Bit	Symbol	Description	Reset value	Access
5:0	BRP	Baud rate prescaler The value by which the oscillator frequency is divided for generating the bit time quanta. The bit time is built up from a multiple of this quanta. Valid values for the Baud Rate Prescaler are 0 to 63.[1]	000001	R/W
7:6	SJW	(Re)synchronization jump width Valid programmed values are 0 to 3.[1]	00	R/W
11:8	TSEG1	Time segment before the sample point Valid values are 1 to 15.[1]	0011	R/W
14:12	TSEG2	Time segment after the sample point Valid values are 0 to 7.[1]	010	R/W
31:15	-	Reserved	-	-

[1] Hardware interprets the value programmed into these bits as the bit value + 1.

For example, with a LPC11Cx system clock set to of 8 MHz, the reset value of 0x2301 configures the C_CAN for a bit rate of 500 kBit/s.

The registers are only writable if a configuration change is enabled in CANCTRL and the controller is initialized by software (bits CCE and INIT in the CAN Control Register are set).

For details on bit timing, see Section 16.7.5 and the *Bosch C_CAN user's manual, revision 1.2*.

Baud rate prescaler

The bit time quanta t_q are determined by the BRP value:

$t_q = BRP / f_{sys}$

(f_{sys} is the LPC11Cx system clock to the C_CAN block).

Time segments 1 and 2

Time segments TSEG1 and TSEG2 determine the number of time quanta per bit time and the location of the sample point:

$t_{TSEG1/2} = t_q \times (TSEG1/2 + 1)$

Synchronization jump width

To compensate for phase shifts between clock oscillators of different bus controllers, any bus controller must re-synchronize on any relevant signal edge of the current transmission. The synchronization jump width t_{SJW} defines the maximum number of clock cycles a certain bit period may be shortened or lengthened by one re-synchronization:

$t_{SJW} = t_q \times (SJW + 1)$

All information provided in this document is subject to legal disclaimers.
© NXP B.V. 2012. All rights reserved.

16.6.1.5 CAN interrupt register

Table 249. CAN interrupt register (CANINT, address 0x4005 0010) bit description

Bit	Symbol	Description	Reset value	Access
15:0	INTID	0x0000 = No interrupt is pending. 0x0001 - 0x0020 = Number of message object which caused the interrupt. 0x0021 - 0x7FFF = Unused 0x8000 = Status interrupt 0x8001 - 0xFFFF = Unused	0	R
31:16	-	Reserved	-	-

If several interrupts are pending, the CAN Interrupt Register will point to the pending interrupt with the highest priority, disregarding their chronological order. An interrupt remains pending until the CPU has cleared it. If INTID is different from 0x0000 and IE is set, the interrupt line to the CPU is active. The interrupt line remains active until INTID is back to value 0x0000 (the cause of the interrupt is reset) or until IE is reset.

The Status Interrupt has the highest priority. Among the message interrupts, the Message Object' s interrupt priority decreases with increasing message number.

A message interrupt is cleared by clearing the Message Object's INTPND bit. The StatusInterrupt is cleared by reading the Status Register.

16.6.1.6 CAN test register

Write access to the Test Register is enabled by setting bit Test in the CAN Control Register.

The different test functions may be combined, but when TX[1:0] ≠ "00" is selected, the message transfer is disturbed.

Table 250. CAN test register (CANTEST, address 0x4005 0014) bit description

Bit	Symbol	Value	Description	Reset value	Access
1:0	-	-	Reserved		-
2	BASIC		Basic mode	0	R/W
		0	Basic mode disabled.		
		1	IF1 registers used as TX buffer, IF2 registers used as RX buffer.		
3	SILENT		Silent mode	0	R/W
		0	Normal operation.		
		1	The module is in silent mode.		
4	LBACK		Loop back mode	0	R/W
		0	Loop back mode is disabled.		
		1	Loop back mode is enabled.		

All information provided in this document is subject to legal disclaimers.

© NXP B.V. 2012. All rights reserved.

Table 250. CAN test register (CANTEST, address 0x4005 0014) bit description

Bit	Symbol	Value	Description	Reset value	Access
6:5	TX		Control of CAN_TXD pins	00	R/W
		0x0	Level at the CAN_TXD pin is controlled by the CAN controller. This is the value at reset.		
		0x1	The sample point can be monitored at the CAN_TXD pin.		
		0x2	CAN_TXD pin is driven LOW/dominant.		
		0x3	CAN_TXD pin is driven HIGH/recessive.		
7	RX		Monitors the actual value of the CAN_RXD pin.	0	R
		0	The CAN bus is recessive (CAN_RXD = '1').		
		1	The CAN bus is dominant (CAN_RXD = '0').		
31:8	-		R/W		-

16.6.1.7 CAN baud rate prescaler extension register

Table 251. CAN baud rate prescaler extension register (CANBRPE, address 0x4005 0018) bit description

Bit	Symbol	Description	Reset value	Access
3:0	BRPE	Baud rate prescaler extension By programming BRPE the Baud Rate Prescaler can be extended to values up to 1023. Hardware interprets the value as the value of BRPE (MSBs) and BRP (LSBs) plus one. Allowed values are 0 to 15.	0x0000	R/W
31:4	-	Reserved	-	-

16.6.2 Message interface registers

There are two sets of interface registers which are used to control the CPU access to the Message RAM. The interface registers avoid conflicts between CPU access to the Message RAM and CAN message reception and transmission by buffering the data to be transferred. A complete Message Object (see Section 16.6.2.1) or parts of the Message Object may be transferred between the Message RAM and the IFx Message Buffer registers in one single transfer.

The function of the two interface register sets is identical (except for test mode Basic). One set of registers may be used for data transfer to the Message RAM while the other set of registers may be used for the data transfer from the Message RAM, allowing both processes to be interrupted by each other.

Each set of interface registers consists of message buffer registers controlled by their own command registers. The command mask register specifies the direction of the data transfer and which parts of a message object will be transferred. The command request register is used to select a message object in the message RAM as target or source for the transfer and to start the action specified in the command mask register.

All information provided in this document is subject to legal disclaimers.

© NXP B.V. 2012. All rights reserved.

Table 252. Message interface registers

IF1 register names	IF1 register set	IF2 register names	IF2 register set
CANIF1_CMDREQ	IF1 command request	CANIF2_CMDREQ	IF2 command request
CANIF1_CMDMASK	IF1 command mask	CANIF2_CMDMASK	IF2 command mask
CANIF1_MASK1	IF1 mask 1	CANIF2_MSK1	IF2 mask 1
CANIF1_MASK2	IF1 mask 2	CANIF2_MSK2	IF2 mask 2
CANIF1_ARB1	IF1 arbitration 1	CANIF2_ARB1	IF2 arbitration 1
CANIF1_ARB2	IF1 arbitration 2	CANIF2_ARB2	IF2 arbitration 2
CANIF1_MCTRL	IF1 message control	CANIF2_MCTRL	IF2 message control
CANIF1_DA1	IF1 data A1	CANIF2_DA1	IF2 data A1
CANIF1_DA2	IF1 data A2	CANIF2_DA2	IF2 data A2
CANIF1_DB1	IF1 data B1	CANIF2_DB1	IF2 data B1
CANIF1_DB2	IF1 data B2	CANIF2_DB2	IF2 data B2

There are 32 Message Objects in the Message RAM. To avoid conflicts between CPU access to the Message RAM and CAN message reception and transmission, the CPU cannot directly access the Message Objects. The message objects are accessed through the IFx Interface Registers.

For details of message handling, see Section 16.7.3.

16.6.2.1 Message objects

A message object contains the information from the various bits in the message interface registers. Table 253 below shows a schematic representation of the structure of the message object. The bits of a message object and the respective interface register where this bit is set or cleared are shown. For bit functions see the corresponding interface register.

Table 253. Structure of a message object in the message RAM

UMASK	MSK[28:0]	MXTD	MDIR	EOB	NEWDAT	MSGLST	RXIE	TXIE	INTPND
IF1/2_MCTRL	IF1/2_MSK1/2			IF1/2_MCTRL					

RMTEN	TXRQST	MSGVAL	ID[28:0]	XTD	DIR	DLC3	DLC2	DLC1	DLC0
IF1/2_MCTRL		IF1/2_ARB1/2				IF1/2_MCTRL			

DATA0	DATA1	DATA2	DATA3	DATA4	DATA5	DATA6	DATA7
IF1/2_DA1		IF1/2_DA2		IF1/2_DB1		IF1/2_DB2	

16.6.2.2 CAN message interface command request registers

A message transfer is started as soon as the CPU has written the message number to the Command Request Register. With this write operation the BUSY bit is automatically set to ‘1’ and the signal CAN_WAIT_B is pulled LOW to notify the CPU that a transfer is in progress. After a wait time of 3 to 6 CAN_CLK periods, the transfer between the Interface Register and the Message RAM has completed. The BUSY bit is set back to zero and the signal CAN_WAIT_B is set back.

All information provided in this document is subject to legal disclaimers.

© NXP B.V. 2012. All rights reserved.

Table 254. CAN message interface command request registers (CANIF1_CMDREQ, address 0x4005 0020 and CANIF2_CMDREQ, address 0x4005 0080) bit description

Bit	Symbol	Value	Description	Reset Value	Access
5:0	MN		Message number 0x01 - 0x20 = Valid message numbers. The message object in the message RAM is selected for data transfer. 0x00 = Not a valid message number. This value is interpreted as 0x20.[1] 0x21 - 0x3F = Not a valid message number. This value is interpreted as 0x01 - 0x1F.[1]	0x00	R/W
14:6	-		reserved	-	-
15	BUSY		BUSY flag	0	RO
		0	Set to zero by hardware when read/write action to this Command request register has finished.		
		1	Set to one by hardware when writing to this Command request register.		
31:16	-	-	Reserved	-	-

[1] When a message number that is not valid is written into the Command request registers, the message number will be transformed into a valid value and that message object will be transferred.

16.6.2.3 CAN message interface command mask registers

The control bits of the IFx Command Mask Register specify the transfer direction and select which of the IFx Message Buffer Registers are source or target of the data transfer.The functions of the register bits depend on the transfer direction (read or write) which is selected in the WR/RD bit (bit 7) of this Command mask register.

Select the WR/RD to

one for the Write transfer direction (write to message RAM)

zero for the Read transfer direction (read from message RAM)

Table 255. CAN message interface command mask registers (CANIF1_CMDMSK, address 0x4005 0024 and CANIF2_CMDMSK, address 0x4005 0084) bit description - write direction

Bit	Symbol	Value	Description	Reset value	Access
0	DATA_B		Access data bytes 4-7	0	R/W
		0	Data bytes 4-7 unchanged.		
		1	Transfer data bytes 4-7 to message object.		
1	DATA_A		Access data bytes 0-3	0	R/W
		0	Data bytes 0-3 unchanged.		
		1	Transfer data bytes 0-3 to message object.		

All information provided in this document is subject to legal disclaimers.

© NXP B.V. 2012. All rights reserved.

Table 255. CAN message interface command mask registers (CANIF1_CMDMSK, address 0x4005 0024 and CANIF2_CMDMSK, address 0x4005 0084) bit description - write direction *…continued*

Bit	Symbol	Value	Description	Reset value	Access
2	TXRQST		Access transmission request bit	0	R/W
		0	No transmission request. TXRQSRT bit unchanged in IF1/2_MCTRL. **Remark:** If a transmission is requested by programming this bit, the TXRQST bit in the CANIFn_MCTRL register is ignored.		
		1	Request a transmission. Set the TXRQST bit IF1/2_MCTRL.		
3	CLRINTPND	-	This bit is ignored in the write direction.	0	R/W
4	CTRL		Access control bits	0	R/W
		0	Control bits unchanged.		
		1	Transfer control bits to message object		
5	ARB		Access arbitration bits	0	R/W
		0	Arbitration bits unchanged.		
		1	Transfer Identifier, DIR, XTD, and MSGVAL bits to message object.		
6	MASK		Access mask bits	0	R/W
		0	Mask bits unchanged.		
		1	Transfer Identifier MASK + MDIR + MXTD to message object.		
7	WR/RD	1	Write transfer Transfer data from the selected message buffer registers to the message object addressed by the command request register CANIFn_CMDREQ.	0	R/W
31:8	-	-	reserved	0	-

Table 256. CAN message interface command mask registers (CANIF1_CMDMSK, address 0x4005 0024 and CANIF2_CMDMSK, address 0x4005 0084) bit description - read direction

Bit	Symbol	Value	Description	Reset value	Access
0	DATA_B		Access data bytes 4-7	0	R/W
		0	Data bytes 4-7 unchanged.		
		1	Transfer data bytes 4-7 to IFx message buffer register.		
1	DATA_A		Access data bytes 0-3	0	R/W
		0	Data bytes 0-3 unchanged.		
		1	Transfer data bytes 0-3 to IFx message buffer.		

All information provided in this document is subject to legal disclaimers.

© NXP B.V. 2012. All rights reserved.

Table 256. CAN message interface command mask registers (CANIF1_CMDMSK, address 0x4005 0024 and CANIF2_CMDMSK, address 0x4005 0084) bit description - read direction *…continued*

Bit	Symbol	Value	Description	Reset value	Access
2	NEWDAT		Access new data bit	0	R/W
		0	NEWDAT bit remains unchanged. **Remark:** A read access to a message object can be combined with the reset of the control bits INTPND and NEWDAT in IF1/2_MCTRL. The values of these bits transferred to the IFx Message Control Register always reflect the status before resetting these bits.		
		1	Clear NEWDAT bit in the message object.		
3	CLRINTPND		Clear interrupt pending bit.	0	R/W
		0	INTPND bit remains unchanged.		
		1	Clear INTPND bit in the message object.		
4	CTRL		Access control bits	0	R/W
		0	Control bits unchanged.		
		1	Transfer control bits to IFx message buffer.		
5	ARB		Access arbitration bits	0	R/W
		0	Arbitration bits unchanged.		
		1	Transfer Identifier, DIR, XTD, and MSGVAL bits to IFx message buffer register.		
6	MASK		Access mask bits	0	R/W
		0	Mask bits unchanged.		
		1	Transfer Identifier MASK + MDIR + MXTD to IFx message buffer register.		
7	WR/RD	0	Read transfer Transfer data from the message object addressed by the command request register to the selected message buffer registers CANIFn_CMDREQ.	0	R/W
31:8	-	-	reserved	0	-

16.6.2.4 IF1 and IF2 message buffer registers

The bits of the Message Buffer registers mirror the Message Objects in the Message RAM.

All information provided in this document is subject to legal disclaimers.

© NXP B.V. 2012. All rights reserved.

16.6.2.4.1 CAN message interface command mask 1 registers

Table 257. CAN message interface command mask 1 registers (CANIF1_MSK1, address 0x4005 0028 and CANIF2_MASK1, address 0x4005 0088) bit description

Bit	Symbol	Value	Description	Reset value	Access
15:0	MSK[15:0]		Identifier mask	0xFFFF	R/W
		0	The corresponding bit in the identifier of the message can not inhibit the match in the acceptance filtering.		
		1	The corresponding identifier bit is used for acceptance filtering.		
31:16	-	-	reserved	0	-

16.6.2.4.2 CAN message interface command mask 2 registers

Table 258. CAN message interface command mask 2 registers (CANIF1_MSK2, address 0x4005 002C and CANIF2_MASK2, address 0x4005 008C) bit description

Bit	Symbol	Value	Description	Reset value	Access
12:0	MSK[28:16]		Identifier mask	0xFFF	R/W
		0	The corresponding bit in the identifier of the message can not inhibit the match in the acceptance filtering.		
		1	The corresponding identifier bit is used for acceptance filtering.		
13	-		Reserved	1	-
14	MDIR		Mask message direction	1	R/W
		0	The message direction bit (DIR) has no effect on acceptance filtering.		
		1	The message direction bit (DIR) is used for acceptance filtering.		
15	MXTD		Mask extend identifier	1	R/W
		0	The extended identifier bit (XTD) has no effect on acceptance filtering.		
		1	The extended identifier bit (XTD) is used for acceptance filtering.		
31:16	-	-	Reserved	0	-

16.6.2.4.3 CAN message interface command arbitration 1 registers

Table 259. CAN message interface command arbitration 1 registers (CANIF1_ARB1, address 0x4005 0030 and CANIF2_ARB1, address 0x4005 0090) bit description

Bit	Symbol	Description	Reset value	Access
15:0	ID[15:0]	Message identifier 29-bit identifier (extended frame) 11-bit identifier (standard frame)	0x00	R/W
31:16	-	Reserved	0	-

All information provided in this document is subject to legal disclaimers.
© NXP B.V. 2012. All rights reserved.

16.6.2.4.4 CAN message interface command arbitration 2 registers

Table 260. CAN message interface command arbitration 2 registers (CANIF1_ARB2, address 0x4005 0034 and CANIF2_ARB2, address 0x4005 0094) bit description

Bit	Symbol	Value	Description	Reset value	Access
12:0	ID[28:16]		Message identifier 29-bit identifier (extended frame) 11-bit identifier (standard frame)	0x00	R/W
13	DIR		Message direction	0x00	R/W
		0	Direction = receive. On TXRQST, a Remote Frame with the identifier of this Message Object is transmitted. On reception of a Data Frame with matching identifier, that message is stored in this Message Object.		
		1	Direction = transmit. On TXRQST, the respective Message Object is transmitted as a Data Frame. On reception of a Remote Frame with matching identifier, the TXRQST bit of this Message Object is set (if RMTEN = one).		
14	XTD		Extend identifier	0x00	R/W
		0	The 11-bit standard identifier will be used for this message object.		
		1	The 29-bit extended identifier will be used for this message object.		
15	MSGVAL		Message valid **Remark:** The CPU must reset the MSGVAL bit of all unused Messages Objects during the initialization before it resets bit INIT in the CAN Control Register. This bit must also be reset before the identifier ID28:0, the control bits XTD, DIR, or the Data Length Code DLC3:0 are modified, or if the Messages Object is no longer required.	0	R/W
		0	The message object is ignored by the message handler.		
		1	The message object is configured and should be considered by the message handler.		
31:16	-	-	Reserved	0	-

16.6.2.4.5 CAN message interface message control registers

Table 261. CAN message interface message control registers (CANIF1_MCTRL, address 0x4005 0038 and CANIF2_MCTRL, address 0x4005 0098) bit description

Bit	Symbol	Value	Description	Reset value	Access
3:0	DLC[3:0]		Data length code **Remark:** The Data Length Code of a Message Object must be defined the same as in all the corresponding objects with the same identifier at other nodes. When the Message Handler stores a data frame, it will write the DLC to the value given by the received message. 0000 - 1000 = Data frame has 0 - 8 data bytes. 1001 - 1111 = Data frame has 8 data bytes.	0000	R/W
6:4	-		reserved	-	-
7	EOB		End of buffer	0	R/W
		0	Message object belongs to a FIFO buffer and is not the last message object of that FIFO buffer.		
		1	Single message object or last message object of a FIFO buffer.		

All information provided in this document is subject to legal disclaimers.
© NXP B.V. 2012. All rights reserved.

Table 261. CAN message interface message control registers (CANIF1_MCTRL, address 0x4005 0038 and CANIF2_MCTRL, address 0x4005 0098) bit description *…continued*

Bit	Symbol	Value	Description	Reset value	Access
8	TXRQST		Transmit request	0	R/W
		0	This message object is not waiting for transmission.		
		1	The transmission of this message object is requested and is not yet done		
9	RMTEN		Remote enable	0	R/W
		0	At the reception of a remote frame, TXRQST is left unchanged.		
		1	At the reception of a remote frame, TXRQST is set.		
10	RXIE		Receive interrupt enable	0	R/W
		0	INTPND will be left unchanged after successful reception of a frame.		
		1	INTPND will be set after successful reception of a frame.		
11	TXIE		Transmit interrupt enable	0	R/W
		0	The INTPND bit will be left unchanged after a successful transmission of a frame.		
		1	INTPND will be set after a successful transmission of a frame.		
12	UMASK		Use acceptance mask **Remark:** If UMASK is set to 1, the message object's mask bits have to be programmed during initialization of the message object before MAGVAL is set to 1.	0	R/W
		0	Mask ignored.		
		1	Use mask (MSK[28:0], MXTD, and MDIR) for acceptance filtering.		
13	INTPND		Interrupt pending	0	R/W
		0	This message object is not the source of an interrupt.		
		1	This message object is the source of an interrupt. The Interrupt Identifier in the Interrupt Register will point to this message object if there is no other interrupt source with higher priority.		
14	MSGLST		Message lost (only valid for message objects in the direction receive).	0	R/W
		0	No message lost since this bit was reset last by the CPU.		
		1	The Message Handler stored a new message into this object when NEWDAT was still set, the CPU has lost a message.		
15	NEWDAT		New data	0	R/W
		0	No new data has been written into the data portion of this message object by the message handler since this flag was cleared last by the CPU.		
		1	The message handler or the CPU has written new data into the data portion of this message object.		
31:16	-	-	Reserved	0	-

16.6.2.4.6 CAN message interface data A1 registers

In a CAN Data Frame, DATA0 is the first, DATA7 (in CAN_IF1B2 AND CAN_IF2B2) is the last byte to be transmitted or received. In CAN's serial bit stream, the MSB of each byte will be transmitted first.

All information provided in this document is subject to legal disclaimers.
© NXP B.V. 2012. All rights reserved.

Remark: Byte DATA0 is the first data byte shifted into the shift register of the CAN Core during a reception, byte DATA7 is the last. When the Message Handler stores a Data Frame, it will write all the eight data bytes into a Message Object. If the Data Length Code is less than 8, the remaining bytes of the Message Object will be overwritten by non specified values.

Table 262. CAN message interface data A1 registers (CANIF1_DA1, address 0x4005 003C and CANIF2_DA1, address 0x4005 009C) bit description

Bit	Symbol	Description	Reset value	Access
7:0	DATA0	Data byte 0	0x00	R/W
15:8	DATA1	Data byte 1	0x00	R/W
31:16	-	Reserved	-	-

16.6.2.4.7 CAN message interface data A2 registers

Table 263. CAN message interface data A2 registers (CANIF1_DA2, address 0x4005 0040 and CANIF2_DA2, address 0x4005 00A0) bit description

Bit	Symbol	Description	Reset value	Access
7:0	DATA2	Data byte 2	0x00	R/W
15:8	DATA3	Data byte 3	0x00	R/W
31:16	-	Reserved	-	-

16.6.2.4.8 CAN message interface data B1 registers

Table 264. CAN message interface data B1 registers (CANIF1_DB1, address 0x4005 0044 and CANIF2_DB1, address 0x4005 00A4) bit description

Bit	Symbol	Description	Reset value	Access
7:0	DATA4	Data byte 4	0x00	R/W
15:8	DATA5	Data byte 5	0x00	R/W
31:16	-	Reserved	-	-

16.6.2.4.9 CAN message interface data B2 registers

Table 265. CAN message interface data B2 registers (CANIF1_DB2, address 0x4005 0048 and CANIF2_DB2, address 0x4005 00A8) bit description

Bit	Symbol	Description	Reset value	Access
7:0	DATA6	Data byte 6	0x00	R/W
15:8	DATA7	Data byte 7	0x00	R/W
31:16	-	Reserved	-	-

16.6.3 Message handler registers

All Message Handler registers are read-only. Their contents (TXRQST, NEWDAT, INTPND, and MSGVAL bits of each Message Object and the Interrupt Identifier) is status information provided by the Message Handler FSM.

All information provided in this document is subject to legal disclaimers.
© NXP B.V. 2012. All rights reserved.

16.6.3.1 CAN transmission request 1 register

This register contains the TXRQST bits of message objects 1 to 16. By reading out the TXRQST bits, the CPU can check for which Message Object a Transmission Request is pending. The TXRQST bit of a specific Message Object can be set/reset by the CPU via the IFx Message Interface Registers or by the Message Handler after reception of a Remote Frame or after a successful transmission.

Table 266. CAN transmission request 1 register (CANTXREQ1, address 0x4005 0100) bit description

Bit	Symbol	Description	Reset value	Access
15:0	TXRQST[16:1]	Transmission request bit of message objects 16 to 1. 0 = This message object is not waiting for transmission. 1 = The transmission of this message object is requested and not yet done.	0x00	R
31:16	-	Reserved	-	-

16.6.3.2 CAN transmission request 2 register

This register contains the TXRQST bits of message objects 32 to 17. By reading out the TXRQST bits, the CPU can check for which Message Object a Transmission Request is pending. The TXRQST bit of a specific Message Object can be set/reset by the CPU via the IFx Message Interface Registers or by the Message Handler after reception of a Remote Frame or after a successful transmission.

Table 267. CAN transmission request 2 register (CANTXREQ2, address 0x4005 0104) bit description

Bit	Symbol	Description	Reset value	Access
15:0	TXRQST[32:17]	Transmission request bit of message objects 32 to 17. 0 = This message object is not waiting for transmission. 1 = The transmission of this message object is requested and not yet done.	0x00	R
31:16	-	Reserved	-	-

16.6.3.3 CAN new data 1 register

This register contains the NEWDAT bits of message objects 16 to 1. By reading out the NEWDAT bits, the CPU can check for which Message Object the data portion was updated. The NEWDAT bit of a specific Message Object can be set/reset by the CPU via the IFx Message Interface Registers or by the Message Handler after reception of a Data Frame or after a successful transmission.

All information provided in this document is subject to legal disclaimers.
© NXP B.V. 2012. All rights reserved.

Table 268. CAN new data 1 register (CANND1, address 0x4005 0120) bit description

Bit	Symbol	Description	Reset value	Access
15:0	NEWDAT[16:1]	New data bits of message objects 16 to 1. 0 = No new data has been written into the data portion of this Message Object by the Message Handler since last time this flag was cleared by the CPU. 1 = The Message Handler or the CPU has written new data into the data portion of this Message Object.	0x00	R
31:16	-	Reserved	-	-

16.6.3.4 CAN new data 2 register

This register contains the NEWDAT bits of message objects 32 to 17. By reading out the NEWDAT bits, the CPU can check for which Message Object the data portion was updated. The NEWDAT bit of a specific Message Object can be set/reset by the CPU via the IFx Message Interface Registers or by the Message Handler after reception of a Data Frame or after a successful transmission.

Table 269. CAN new data 2 register (CANND2, address 0x4005 0124) bit description

Bit	Symbol	Description	Reset value	Access
15:0	NEWDAT[32:17]	New data bits of message objects 32 to 17. 0 = No new data has been written into the data portion of this Message Object by the Message Handler since last time this flag was cleared by the CPU. 1 = The Message Handler or the CPU has written new data into the data portion of this Message Object.	0x00	R
31:16	-	Reserved	-	-

16.6.3.5 CAN interrupt pending 1 register

This register contains the INTPND bits of message objects 16 to 1. By reading out the INTPND bits, the CPU can check for which Message Object an interrupt is pending. The INTPND bit of a specific Message Object can be set/reset by the CPU via the IFx Message Interface Registers or by the Message Handler after reception or after a successful transmission of a frame. This will also affect the value of INTPND in the Interrupt Register.

Table 270. CAN interrupt pending 1 register (CANIR1, address 0x4005 0140) bit description

Bit	Symbol	Description	Reset value	Access
15:0	INTPND[16:1]	Interrupt pending bits of message objects 16 to 1. 0 = This message object is ignored by the message handler. 1 = This message object is the source of an interrupt.	0x00	R
31:16	-	Reserved	-	-

All information provided in this document is subject to legal disclaimers.
© NXP B.V. 2012. All rights reserved.

16.6.3.6 CAN interrupt pending 2 register

This register contains the INTPND bits of message objects 32 to 17. By reading out the INTPND bits, the CPU can check for which Message Object an interrupt is pending. The INTPND bit of a specific Message Object can be set/reset by the CPU via the IFx Message Interface Registers or by the Message Handler after reception or after a successful transmission of a frame. This will also affect the value of INTPND in the Interrupt Register.

Table 271. CAN interrupt pending 2 register (CANIR2, addresses 0x4005 0144) bit description

Bit	Symbol	Description	Reset value	Access
15:0	INTPND[32:17]	Interrupt pending bits of message objects 32 to 17. 0 = This message object is ignored by the message handler. 1 = This message object is the source of an interrupt.	0x00	R
31:16	-	Reserved	-	-

16.6.3.7 CAN message valid 1 register

This register contains the MSGVAL bits of message objects 16 to 1. By reading out the MSGVAL bits, the CPU can check which Message Object is valid. The MSGVAL bit of a specific Message Object can be set/reset by the CPU via the IFx Message Interface Registers.

Table 272. CAN message valid 1 register (CANMSGV1, addresses 0x4005 0160) bit description

Bit	Symbol	Description	Reset value	Access
15:0	MSGVAL[16:1]	Message valid bits of message objects 16 to 1. 0 = This message object is ignored by the message handler. 1 = This message object is configured and should be considered by the message handler.	0x00	R
31:16	-	Reserved	-	-

16.6.3.8 CAN message valid 2 register

This register contains the MSGVAL bits of message objects 32 to 17. By reading out the MSGVAL bits, the CPU can check which Message Object is valid. The MSGVAL bit of a specific Message Object can be set/reset by the CPU via the IFx Message Interface Registers.

Table 273. CAN message valid 2 register (CANMSGV2, address 0x4005 0164) bit description

Bit	Symbol	Description	Access	Reset value
15:0	MSGVAL[32:17]	Message valid bits of message objects 32 to 17. 0 = This message object is ignored by the message handler. 1 = This message object is configured and should be considered by the message handler.	R	0x00
31:16	-	Reserved	-	-

All information provided in this document is subject to legal disclaimers.
© NXP B.V. 2012. All rights reserved.

16.6.4 CAN timing register

16.6.4.1 CAN clock divider register

This register determines the CAN clock signal. The CAN_CLK is derived from the peripheral clock PCLK divided by the values in this register.

Table 274. CAN clock divider register (CANCLKDIV, address 0x4005 0180) bit description

Bit	Symbol	Description	Reset value	Access
3:0	CLKDIVVAL	Clock divider value. CAN_CLK = PCLK/(CLKDIVVAL +1) 0000: CAN_CLK = PCLK divided by 1. 0001: CAN_CLK = PCLK divided by 2. 0010: CAN_CLK = PCLK divided by 3 0011: CAN_CLK = PCLK divided by 4. ... 1111: CAN_CLK = PCLK divided by 16.	0000	R/W
31:4	-	reserved	-	-

16.7 Functional description

16.7.1 C_CAN controller state after reset

After a hardware reset, the registers hold the values described in Table 244. Additionally, the busoff state is reset and the output CAN_TXD is set to recessive (HIGH). The value 0x0001 (INIT = ‘1’) in the CAN Control Register enables the software initialization. The CAN controller does not communicate with the CAN bus until the CPU resets INIT to ‘0’.

The data stored in the message RAM is not affected by a hardware reset. After power-on, the contents of the message RAM is undefined.

16.7.2 C_CAN operating modes

16.7.2.1 Software initialization

The software initialization is started by setting the bit INIT in the CAN Control Register, either by software or by a hardware reset, or by entering the busoff state.

During software initialization (INIT bit is set), the following conditions are present:

- All message transfer from and to the CAN bus is stopped.
- The status of the CAN output CAN_TXD is recessive (HIGH).
- The EC counters are unchanged.
- The configuration registers are unchanged.
- Access to the bit timing register and the BRP extension register is enabled if the CCE bit in the CAN control register is also set.

To initialize the CAN controller, software has to set up the bit timing register and each message object. If a message object is not needed, it is sufficient to set its MSGVAL bit to not valid. Otherwise, the whole message object has to be initialized.

All information provided in this document is subject to legal disclaimers. © NXP B.V. 2012. All rights reserved.

Resetting the INIT bit finishes the software initialization. Afterwards the Bit Stream Processor BSP synchronizes itself to the data transfer on the CAN bus by waiting for the occurrence of a sequence of 11 consecutive recessive bits (Bus Idle) before it can take part in bus activities and starts the message transfer.

Remark: The initialization of the Message Objects is independent of INIT and also can be done on the fly, but the Message Objects should all be configured to particular identifiers or set to not valid during software initialization before the BSP starts the message transfer. To change the configuration of a Message Object during normal operation, the CPU has to start by setting the MSGVAL bit to not valid. When the configuration is completed, MSAGVALis set to valid again.

16.7.2.2 CAN message transfer

Once the CAN controller is initialized and INIT is reset to zero, the CAN core synchronizes itself to the CAN bus and starts the message transfer.

Received messages are stored into their appropriate Message Objects if they pass the Message Handler's acceptance filtering. The whole message including all arbitration bits, DLC and eight data bytes is stored into the Message Object. If the Identifier Mask is used, the arbitration bits which are masked to "don't care" may be overwritten in the Message Object.

The CPU may read or write each message any time via the Interface Registers. The Message Handler guarantees data consistency in case of concurrent accesses.

Messages to be transmitted are updated by the CPU. If a permanent Message Object (arbitration and control bits set up during configuration) exists for the message, only the data bytes are updated and then TXRQUT bit with NEWDAT bit are set to start the transmission. If several transmit messages are assigned to the same Message Object (when the number of Message Objects is not sufficient), the whole Message Object has to be configured before the transmission of this message is requested.

The transmission of any number of Message Objects may be requested at the same time, and they are transmitted subsequently according to their internal priority. Messages may be updated or set to not valid any time, even when their requested transmission is still pending. The old data will be discarded when a message is updated before its pending transmission has started.

Depending on the configuration of the Message Object, the transmission of a message may be requested autonomously by the reception of a remote frame with a matching identifier.

16.7.2.3 Disabled Automatic Retransmission (DAR)

According to the *CAN Specification (ISO11898, 6.3.3 Recovery Management)*, the CAN controller provides means for automatic retransmission of frames that have lost arbitration or that have been disturbed by errors during transmission. The frame transmission service will not be confirmed to the user before the transmission is successfully completed. By default, the automatic retransmission on lost arbitration or error is enabled. It can be disabled to enable the CAN controller to work within a Time Triggered CAN (TTCAN, see ISO11898-1) environment.

All information provided in this document is subject to legal disclaimers.
© NXP B.V. 2012. All rights reserved.

The Disable Automatic Retransmission mode is enabled by programming bit DAR in the CAN Control Register to one. In this operation mode the programmer has to consider the different behavior of bits TXRQST and NEWDAT in the Control Registers of the Message Buffers:

- When a transmission starts, bit TXRQST of the respective Message Buffer is reset while bit NEWDAT remains set.
- When the transmission completed successfully, bit NEWDAT is reset.
- When a transmission failed (lost arbitration or error), bit NEWDAT remains set. To restart the transmission, the CPU has to set TXRQST back to one.

16.7.2.4 Test modes

The Test mode is entered by setting bit TEST in the CAN Control Register to one. In Test mode the bits TX1, TX0, LBACK, SILENT, and BASIC in the Test Register are writable. Bit RX monitors the state of pins RD0,1 and therefore is only readable. All Test register functions are disabled when bit TEST is reset to zero.

16.7.2.4.1 Silent mode

The CAN core can be set in Silent mode by programming the Test register bit SILENT to one.

In Silent Mode, the CAN controller is able to receive valid data frames and valid remote frames, but it sends only recessive bits on the CAN bus, and it cannot start a transmission. If the CAN Core is required to send a dominant bit (ACK bit, overload flag, active error flag), the bit is rerouted internally so that the CAN Core monitors this dominant bit, although the CAN bus may remain in recessive state. The Silent mode can be used to analyze the traffic on a CAN bus without affecting it by the transmission of dominant bits (Acknowledge Bits, Error Frames).

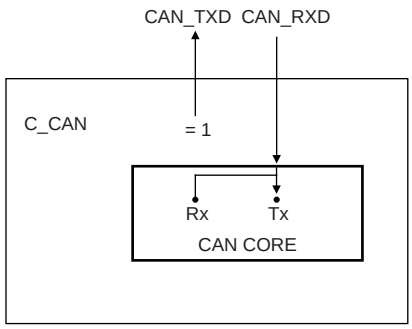

Fig 61. CAN core in Silent mode

16.7.2.4.2 Loop-back mode

The CAN Core can be set in Loop-back mode by programming the Test Register bit LBACK to one. In Loop-back Mode, the CAN Core treats its own transmitted messages as received messages and stores them (if they pass acceptance filtering) into a Receive Buffer.

All information provided in this document is subject to legal disclaimers.
© NXP B.V. 2012. All rights reserved.

This mode is provided for self-test functions. To be independent from external stimulation, the CAN Core ignores acknowledge errors (recessive bit sampled in the acknowledge slot of a data/remote frame) in Loop-back mode. In this mode the CAN core performs an internal feedback from its CAN_TXD output to its CAN_RXD input. The actual value of the CAN_RXD input pin is disregarded by the CAN Core. The transmitted messages can be monitored at the CAN_TXD pin.

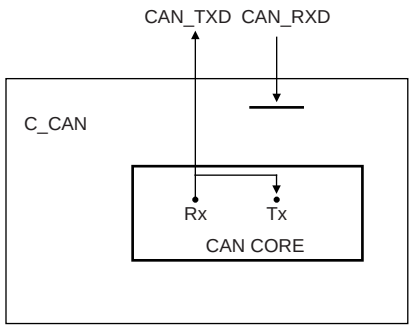

Fig 62. CAN core in Loop-back mode

16.7.2.4.3 Loop-back mode combined with Silent mode

It is also possible to combine Loop-back mode and Silent mode by programming bits LBACK and SILENT to one at the same time. This mode can be used for a “Hot Selftest”, meaning the C_CAN can be tested without affecting a running CAN system connected to the pins CAN_TXD and CAN_RXD. In this mode the CAN_RXD pin is disconnected from the CAN Core and the CAN_TXD pin is held recessive.

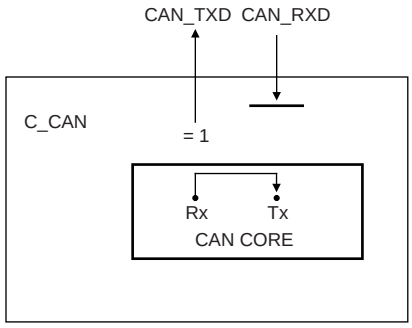

Fig 63. CAN core in Loop-back mode combined with Silent mode

16.7.2.4.4 Basic mode

The CAN Core can be set in Basic mode by programming the Test Register bit BASIC to one. In this mode the CAN controller runs without the Message RAM.

The IF1 Registers are used as Transmit Buffer. The transmission of the contents of the IF1 Registers is requested by writing the BUSY bit of the IF1 Command Request Register to ‘1’. The IF1 Registers are locked while the BUSY bit is set. The BUSY bit indicates that the transmission is pending.

All information provided in this document is subject to legal disclaimers.
© NXP B.V. 2012. All rights reserved.

As soon the CAN bus is idle, the IF1 Registers are loaded into the shift register of the CAN Core and the transmission is started. When the transmission has completed, the BUSY bit is reset and the locked IF1 Registers are released.

A pending transmission can be aborted at any time by resetting the BUSY bit in the IF1 Command Request Register while the IF1 Registers are locked. If the CPU has reset the BUSY bit, a possible retransmission in case of lost arbitration or in case of an error is disabled.

The IF2 Registers are used as Receive Buffer. After the reception of a message the contents of the shift register is stored into the IF2 Registers, without any acceptance filtering.

Additionally, the actual contents of the shift register can be monitored during the message transfer. Each time a read Message Object is initiated by writing the BUSY bit of the IF2 Command Request Register to ‘1’, the contents of the shift register is stored into the IF2 Registers.

In Basic mode the evaluation of all Message Object related control and status bits and of the control bits of the IFx Command Mask Registers is turned off. The message number of the Command request registers is not evaluated. The NEWDAT and MSGLST bits of the IF2 Message Control Register retain their function, DLC3-0 will show the received DLC, the other control bits will be read as ‘0’.

In Basic mode the ready output CAN_WAIT_B is disabled (always ‘1’)

16.7.2.4.5 Software control of pin CAN_TXD

Four output functions are available for the CAN transmit pin CAN_TXD:

1. serial data output (default).
2. drives CAN sample point signal to monitor the CAN controller’s timing.
3. drives recessive constant value.
4. drives dominant constant value.

The last two functions, combined with the readable CAN receive pin CAN_RXD, can be used to check the CAN bus’ physical layer.

The output mode of pin CAN_TXD is selected by programming the Test Register bits TX1 and TX0 as described Section 16.6.1.6.

Remark: The three test functions for pin CAN_TXD interfere with all CAN protocol functions. The CAN_TXD pin must be left in its default function when CAN message transfer or any of the test modes Loo-back mode, Silent mode, or Basic mode are selected.

16.7.3 CAN message handler

The Message handler controls the data transfer between the Rx/Tx Shift Register of the CAN Core, the Message RAM and the IFx Registers, see Figure 64.

The message handler controls the following functions:

- Data Transfer between IFx Registers and the Message RAM

All information provided in this document is subject to legal disclaimers.
© NXP B.V. 2012. All rights reserved.

- Data Transfer from Shift Register to the Message RAM
- Data Transfer from Message RAM to Shift Register
- Data Transfer from Shift Register to the Acceptance Filtering unit
- Scanning of Message RAM for a matching Message Object
- Handling of TXRQST flags
- Handling of interrupts

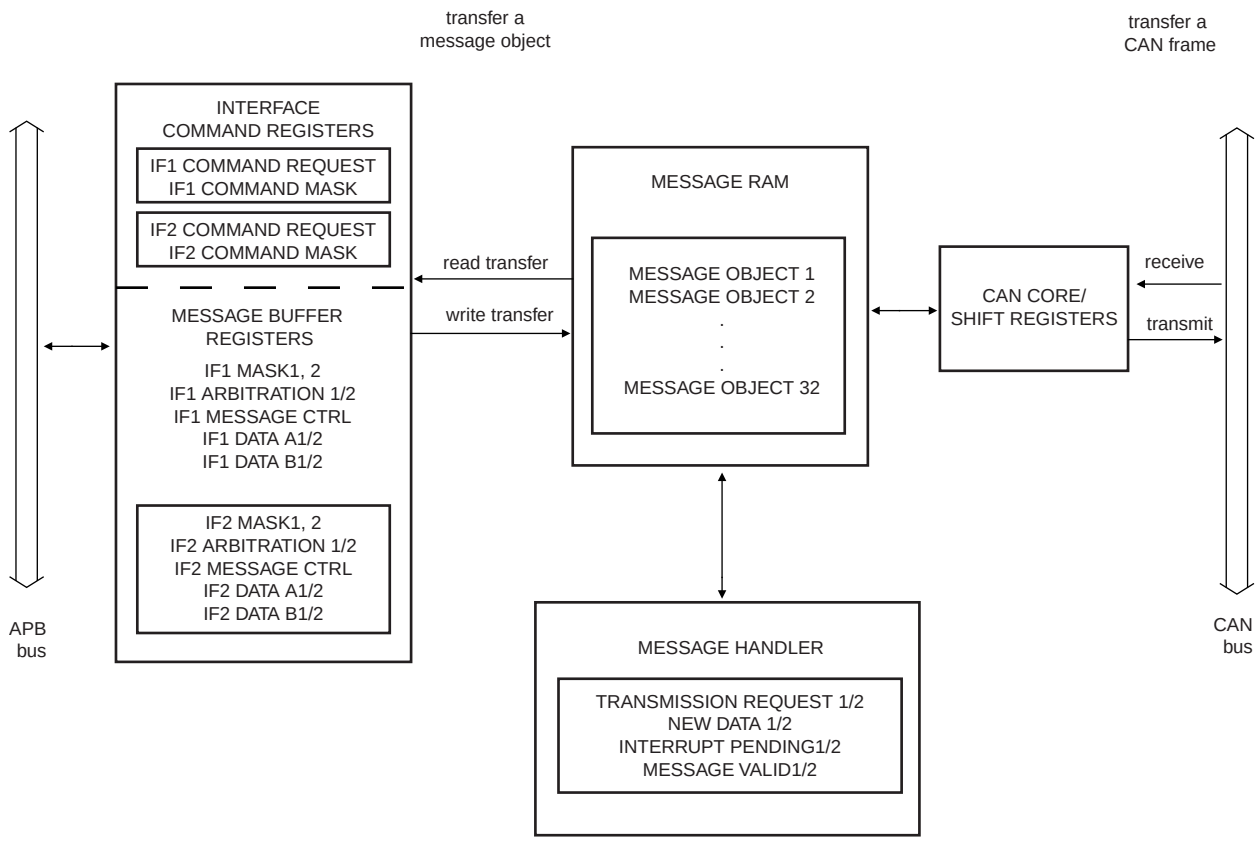

Fig 64. Block diagram of a message object transfer

16.7.3.1 Management of message objects

The configuration of the Message Objects in the Message RAM will (with the exception of the bits MSGVAL, NEWDAT, INTPND, and TXRQST) is not be affected by resetting the chip. All the Message Objects must be initialized by the CPU or they must be set to not valid (MSGVAL = ‘0’).The bit timing must be configured before the CPU clears the INIT bit in the CAN Control Register.

The configuration of a Message Object is done by programming Mask, Arbitration, Control and Data field of one of the two interface register sets to the desired values. By writing to the corresponding IFx Command Request Register, the IFx Message Buffer Registers are loaded into the addressed Message Object in the Message RAM.

All information provided in this document is subject to legal disclaimers.
© NXP B.V. 2012. All rights reserved.

When the INIT bit in the CAN Control Register is cleared, the CAN Protocol Controller state machine of the CAN core and the Message Handler State Machine control the CAN controller's internal data flow. Received messages that pass the acceptance filtering are stored into the Message RAM, and messages with pending transmission request are loaded into the CAN core's shift register and are transmitted via the CAN bus.

The CPU reads received messages and updates messages to be transmitted via the IFx Interface Registers. Depending on the configuration, the CPU is interrupted on certain CAN message and CAN error events.

16.7.3.2 Data Transfer between IFx Registers and the Message RAM

When the CPU initiates a data transfer between the IFx Registers and Message RAM, the Message Handler sets the BUSY bit in the respective Command Register to '1'. After the transfer has completed, the BUSY bit is set back to '0'.

The Command Mask Register specifies whether a complete Message Object or only parts of it will be transferred. Due to the structure of the Message RAM it is not possible to write single bits/bytes of one Message Object. Software must always write a complete Message Object into the Message RAM. Therefore the data transfer from the IFx Registers to the Message RAM requires a read-modify-write cycle:

1. Read the parts of the message object that are not to be changed from the message RAM using the command mask register.
   - After the partial read of a Message Object, the Message Buffer Registers that are not selected in the Command Mask Register will be left unchanged.
2. Write the complete contents of the message buffer registers into the message object.
   - After the partial write of a Message Object, the Message Buffer Registers that are not selected in the Command Mask Register will set to the actual contents of the selected Message Object.

16.7.3.3 Transmission of messages between the shift registers in the CAN core and the Message buffer

If the shift register of the CAN Core cell is ready for loading and if there is no data transfer between the IFx Registers and Message RAM, the MSGVAL bits in the Message Valid Register TXRQST bits in the Transmission Request Register are evaluated. The valid Message Object with the highest priority pending transmission request is loaded into the shift register by the Message Handler and the transmission is started. The Message Object's NEWDAT bit is reset.

After a successful transmission and if no new data was written to the Message Object (NEWDAT = '0') since the start of the transmission, the TXRQST bit will be reset. If TXIE is set, INTPND will be set after a successful transmission. If the CAN controller has lost the arbitration or if an error occurred during the transmission, the message will be retransmitted as soon as the CAN bus is free again. If meanwhile the transmission of a message with higher priority has been requested, the messages will be transmitted in the order of their priority.

All information provided in this document is subject to legal disclaimers.
© NXP B.V. 2012. All rights reserved.

16.7.3.4 Acceptance filtering of received messages

When the arbitration and control field (Identifier + IDE + RTR + DLC) of an incoming message is completely shifted into the Rx/Tx Shift Register of the CAN Core, the Message Handler state machine starts the scanning of the Message RAM for a matching valid Message Object.

To scan the Message RAM for a matching Message Object, the Acceptance Filtering unit is loaded with the arbitration bits from the CAN Core shift register. Then the arbitration and mask fields (including MSGVAL, UMASK, NEWDAT, and EOB) of Message Object 1 are loaded into the Acceptance Filtering unit and compared with the arbitration field from the shift register. This is repeated with each following Message Object until a matching Message Object is found or until the end of the Message RAM is reached.

If a match occurs, the scanning is stopped and the Message Handler state machine proceeds depending on the type of frame (Data Frame or Remote Frame) received.

16.7.3.4.1 Reception of a data frame

The Message Handler state machine stores the message from the CAN Core shift register into the respective Message Object in the Message RAM. The data bytes, all arbitration bits, and the Data Length Code are stored into the corresponding Message Object. This is implemented to keep the data bytes connected with the identifier even if arbitration mask registers are used.

The NEWDAT bit is set to indicate that new data (not yet seen by the CPU) has been received. The CPU/software should reset NEWDAT when it reads the Message Object. If at the time of the reception the NEWDAT bit was already set, MSGLST is set to indicate that the previous data (supposedly not seen by the CPU) is lost. If the RxIE bit is set, the INTPND bit is also set, causing the Interrupt Register to point to this Message Object.

The TXRQST bit of this Message Object is reset to prevent the transmission of a Remote Frame, while the requested Data Frame has just been received.

16.7.3.4.2 Reception of a remote frame

When a Remote Frame is received, three different configurations of the matching Message Object have to be considered:

1. DIR = ‘1’ (direction = transmit), RMTEN = ‘1’, UMASK = ‘1’ or’0’

   On the reception of a matching Remote Frame, the TXRQST bit of this Message Object is set. The rest of the Message Object remains unchanged.

2. DIR = ‘1’ (direction = transmit), RMTEN = ‘0’, UMASK = ’0’

   On the reception of a matching Remote Frame, the TXRQST bit of this Message Object remains unchanged; the Remote Frame is ignored.

3. DIR = ‘1’ (direction = transmit), RMTEN = ‘0’, UMASK = ’1’

   On the reception of a matching Remote Frame, the TXRQST bit of this Message Object is reset. The arbitration and control field (Identifier + IDE + RTR + DLC) from the shift register is stored into the Message Object in the Message RAM, and the NEWDAT bit of this Message Object is set. The data field of the Message Object remains unchanged; the Remote Frame is treated similar to a received Data Frame.

All information provided in this document is subject to legal disclaimers.
© NXP B.V. 2012. All rights reserved.

16.7.3.5 Receive/transmit priority

The receive/transmit priority for the Message Objects is attached to the message number. Message Object 1 has the highest priority, while Message Object 32 has the lowest priority. If more than one transmission request is pending, they are serviced due to the priority of the corresponding Message Object.

16.7.3.6 Configuration of a transmit object

Table 275 shows how a transmit object should be initialized by software (see also Table 253):

Table 275. Initialization of a transmit object

MSGVAL	Arbitration bits	Data bits	Mask bits	EOB	DIR	NEWDAT
1	application dependent	application dependent	application dependent	1	1	0
MSGLST	**RXIE**	**TXIE**	**INTPND**	**RMTEN**	**TXRQST**	
0	0	application dependent	0	application dependent	0	

The Arbitration Registers (ID28:0 and XTD bit) are given by the application. They define the identifier and the type of the outgoing message. If an 11-bit Identifier (“Standard Frame”) is used, it is programmed to ID28. In this case ID18, ID17 to ID0 can be disregarded.

If the TXIE bit is set, the INTPND bit will be set after a successful transmission of the Message Object.

If the RMTEN bit is set, a matching received Remote Frame will cause the TXRQST bit to be set, and the Remote Frame will autonomously be answered by a Data Frame.

The Data Registers (DLC3:0, Data0:7) are given by the application. TXRQST and RMTEN may not be set before the data is valid.

The Mask Registers (Msk28-0, UMASK, MXTD, and MDIR bits) may be used (UMASK=’1’) to allow groups of Remote Frames with similar identifiers to set the TXRQST bit. For details see Section 16.7.3.4.2. The DIR bit should not be masked.

16.7.3.7 Updating a transmit object

The CPU may update the data bytes of a Transmit Object any time via the IFx Interface registers. Neither MSGVAL nor TXRQST have to be reset before the update.

Even if only a part of the data bytes are to be updated, all four bytes of the corresponding IFx Data A Register or IFx Data B Register have to be valid before the content of that register is transferred to the Message Object. Either the CPU has to write all four bytes into the IFx Data Register or the Message Object is transferred to the IFx Data Register before the CPU writes the new data bytes.

When only the (eight) data bytes are updated, first 0x0087 is written to the Command Mask Register. Then the number of the Message Object is written to the Command Request Register, concurrently updating the data bytes and setting TXRQST.

All information provided in this document is subject to legal disclaimers.

© NXP B.V. 2012. All rights reserved.

To prevent the reset of TXRQST at the end of a transmission that may already be in progress while the data is updated, NEWDAT has to be set together with TXRQST. For details see Section 16.7.3.3.

When NEWDAT is set together with TXRQST, NEWDAT will be reset as soon as the new transmission has started.

16.7.3.8 Configuration of a receive object

Table 276 shows how a receive object should be initialized by software (see also Table 253)

Table 276. Initialization of a receive object

MSGVAL	Arbitration bits	Data bits	Mask bits	EOB	DIR	NEWDAT
1	application dependent	application dependent	application dependent	1	0	0
MSGLST	**RXIE**	**TXIE**	**INTPND**	**RMTEN**	**TXRQST**	
0	application dependent	0	0	0	0	

The Arbitration Registers (ID28-0 and XTD bit) are given by the application. They define the identifier and type of accepted received messages. If an 11-bit Identifier (“Standard Frame”) is used, it is programmed to ID28 to ID18. ID17 to ID0 can then be disregarded. When a Data Frame with an 11-bit Identifier is received, ID17 to ID0 will be set to ‘0’.

If the RxIE bit is set, the INTPND bit will be set when a received Data Frame is accepted and stored in the Message Object.

The Data Length Code (DLC[3:0] is given by the application. When the Message Handler stores a Data Frame in the Message Object, it will store the received Data Length Code and eight data bytes. If the Data Length Code is less than 8, the remaining bytes of the Message Object will be overwritten by non specified values.

The Mask Registers (Msk[28:0], UMASK, MXTD, and MDIR bits) may be used (UMASK=’1’) to allow groups of Data Frames with similar identifiers to be accepted. For details see section Section 16.7.3.4.1. The DIR bit should not be masked in typical applications.

16.7.3.9 Handling of received messages

The CPU may read a received message any time via the IFx Interface registers. The data consistency is guaranteed by the Message Handler state machine.

To transfer the entire received message from message RAM into the message buffer, software must write first 0x007F to the Command Mask Register and then the number of the Message Object to the Command Request Register. Additionally, the bits NEWDAT and INTPND are cleared in the Message RAM (not in the Message Buffer).

If the Message Object uses masks for acceptance filtering, the arbitration bits show which of the matching messages has been received.

All information provided in this document is subject to legal disclaimers.
© NXP B.V. 2012. All rights reserved.

The actual value of NEWDAT shows whether a new message has been received since last time this Message Object was read. The actual value of MSGLST shows whether more than one message has been received since last time this Message Object was read. MSGLST will not be automatically reset.

Using a Remote Frame, the CPU may request another CAN node to provide new data for a receive object. Setting the TXRQST bit of a receive object will cause the transmission of a Remote Frame with the receive object's identifier. This Remote Frame triggers the other CAN node to start the transmission of the matching Data Frame. If the matching Data Frame is received before the Remote Frame could be transmitted, the TXRQST bit is automatically reset.

16.7.3.10 Configuration of a FIFO buffer

With the exception of the EOB bit, the configuration of Receive Objects belonging to a FIFO Buffer is the same as the configuration of a (single) Receive Object, see section Section 16.7.3.8.

To concatenate two or more Message Objects into a FIFO Buffer, the identifiers and masks (if used) of these Message Objects have to be programmed to matching values. Due to the implicit priority of the Message Objects, the Message Object with the lowest number will be the first Message Object of the FIFO Buffer. The EOB bit of all Message Objects of a FIFO Buffer except the last have to be programmed to zero. The EOB bits of the last Message Object of a FIFO Buffer is set to one, configuring it as the End of the Block.

16.7.3.10.1 Reception of messages with FIFO buffers

Received messages with identifiers matching to a FIFO Buffer are stored into a Message Object of this FIFO Buffer starting with the Message Object with the lowest message number.

When a message is stored into a Message Object of a FIFO Buffer the NEWDAT bit of this Message Object is set. By setting NEWDAT while EOB is zero the Message Object is locked for further write accesses by the Message Handler until the CPU has written the NEWDAT bit back to zero.

Messages are stored into a FIFO Buffer until the last Message Object of this FIFO Buffer is reached. If none of the preceding Message Objects is released by writing NEWDAT to zero, all further messages for this FIFO Buffer will be written into the last Message Object of the FIFO Buffer and therefore overwrite previous messages.

16.7.3.10.2 Reading from a FIFO buffer

When the CPU transfers the contents of Message Object to the IFx Message Buffer registers by writing its number to the IFx Command Request Register, bits NEWDAT and INTPND in the corresponding Command Mask Register should be reset to zero (TXRQST/NEWDAT = '1' and ClrINTPND = '1'). The values of these bits in the Message Control Register always reflect the status before resetting the bits.

To assure the correct function of a FIFO Buffer, the CPU should read out the Message Objects starting at the FIFO Object with the lowest message number.

All information provided in this document is subject to legal disclaimers.
© NXP B.V. 2012. All rights reserved.

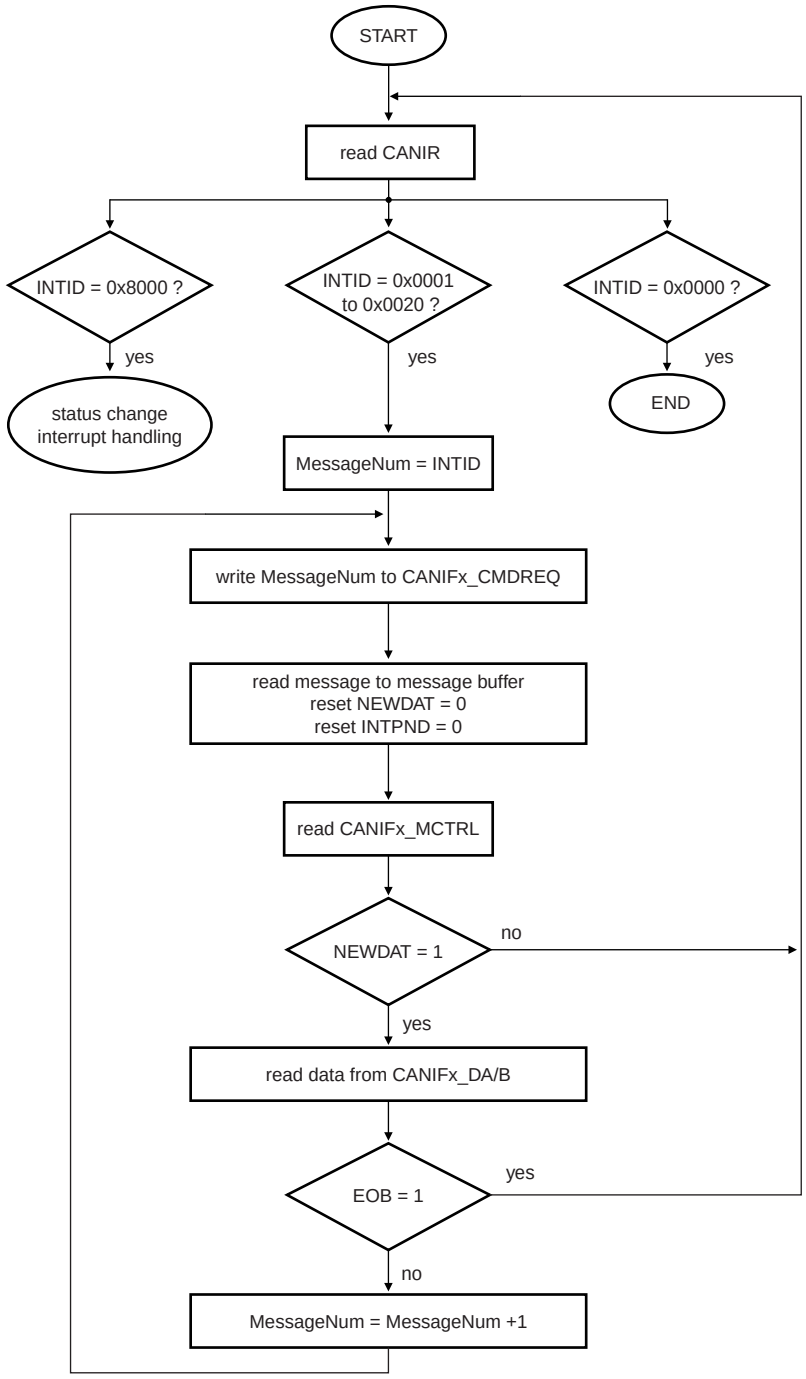

Fig 65. Reading a message from the FIFO buffer to the message buffer

16.7.4 Interrupt handling

If several interrupts are pending, the CAN Interrupt Register will point to the pending interrupt with the highest priority, disregarding their chronological order. An interrupt remains pending until the CPU has cleared it.

All information provided in this document is subject to legal disclaimers.
© NXP B.V. 2012. All rights reserved.

The Status Interrupt has the highest priority. Among the message interrupts, the Message Object's interrupt priority decreases with increasing message number.

A message interrupt is cleared by clearing the Message Object's INTPND bit. The Status Interrupt is cleared by reading the Status Register.

The interrupt identifier INTID in the Interrupt Register indicates the cause of the interrupt. When no interrupt is pending, the register will hold the value zero. If the value of the Interrupt Register is different from zero, then there is an interrupt pending and, if IE is set, the interrupt line to the CPU, IRQ_B, is active. The interrupt line remains active until the Interrupt Register is back to value zero (the cause of the interrupt is reset) or until IE is reset.

The value 0x8000 indicates that an interrupt is pending because the CAN Core has updated (not necessarily changed) the Status Register (Error Interrupt or Status Interrupt). This interrupt has the highest priority. The CPU can update (reset) the status bits RXOK, TXOK and LEC, but a write access of the CPU to the Status Register can never generate or reset an interrupt.

All other values indicate that the source of the interrupt is one of the Message Objects where INTID points to the pending message interrupt with the highest interrupt priority.

The CPU controls whether a change of the Status Register may cause an interrupt (bits EIE and SIE in the CAN Control Register) and whether the interrupt line becomes active when the Interrupt Register is different from zero (bit IE in the CAN Control Register). The Interrupt Register will be updated even when IE is reset.

The CPU has two possibilities to follow the source of a message interrupt:

- Software can follow the INTID in the Interrupt Register.
- Software can poll the interrupt pending register, see Section 16.6.3.5.

An interrupt service routine reading the message that is the source of the interrupt may read the message and reset the Message Object's INTPND at the same time (bit ClrINTPND in the Command Mask Register). When INTPND is cleared, the Interrupt Register will point to the next Message Object with a pending interrupt.

16.7.5 Bit timing

Even if minor errors in the configuration of the CAN bit timing do not result in immediate failure, the performance of a CAN network can be reduced significantly. In many cases, the CAN bit synchronization will amend a faulty configuration of the CAN bit timing to such a degree that only occasionally an error frame is generated. In the case of arbitration however, when two or more CAN nodes simultaneously try to transmit a frame, a misplaced sample point may cause one of the transmitters to become error passive.

The analysis of such sporadic errors requires a detailed knowledge of the CAN bit synchronization inside a CAN node and of the CAN nodes' interaction on the CAN bus.

All information provided in this document is subject to legal disclaimers.
© NXP B.V. 2012. All rights reserved.

16.7.5.1 Bit time and bit rate

CAN supports bit rates in the range of lower than 1 kBit/s up to 1000 kBit/s. Each member of the CAN network has its own clock generator, usually a quartz oscillator. The timing parameter of the bit time (i.e. the reciprocal of the bit rate) can be configured individually for each CAN node, creating a common bit rate even though the CAN nodes' oscillator periods (f_{osc}) may be different.

The frequencies of these oscillators are not absolutely stable, as small variations are caused by changes in temperature or voltage and by deteriorating components. As long as the variations remain inside a specific oscillator tolerance range (df), the CAN nodes are able to compensate for the different bit rates by re-synchronizing to the bit stream.

According to the CAN specification, the bit time is divided into four segments (Figure 66). The Synchronization Segment, the Propagation Time Segment, the Phase Buffer Segment 1, and the Phase Buffer Segment 2. Each segment consists of a specific, programmable number of time quanta (see Table 277). The length of the time quantum (t_q), which is the basic time unit of the bit time, is defined by the CAN controller's system clock f and the Baud Rate Prescaler (BRP): t_q = BRP / f_{sys}. The C_CAN's system clock f_{sys} is the frequency of the LPC11Cx system clock (see Section 16.2).

The Synchronization Segment Sync_Seg is the part of the bit time where edges of the CAN bus level are expected to occur; the distance between an edge that occurs outside of Sync_Seg and the Sync_Seg is called the phase error of that edge. The Propagation Time Segment Prop_Seg is intended to compensate for the physical delay times within the CAN network. The Phase Buffer Segments Phase_Seg1 and Phase_Seg2 surround the Sample Point. The (Re-)Synchronization Jump Width (SJW) defines how far a re-synchronization may move the Sample Point inside the limits defined by the Phase Buffer Segments to compensate for edge phase errors.

Table 277 describes the minimum programmable ranges required by the CAN protocol. Bit time parameters are programmed through the CANBT register, Table 248. For details on bit timing and examples, see the *C_CAN user's manual, revision 1.2*.

Table 277. Parameters of the C_CAN bit time

Parameter	Range	Function
BRP	(1...32)	Defines the length of the time quantum t_q.
SYNC_SEG	$1t_q$	Synchronization segment. Fixed length. Synchronization of bus input to system clock.
PROP_SEG	(1...8) × t_q	Propagation time segment. Compensates for physical delay times. This parameter is determined by the system delay times in the C_CAN network.
TSEG1	(1...8) × t_q	Phase buffer segment 1. May be lengthened temporarily by synchronization.
TSEG2	(1...8) × t_q	Phase buffer segment 2. May be shortened temporarily by synchronization.
SJW	(1...4) × t_q	(Re-) synchronization jump width. May not be longer than either phase buffer segment.

All information provided in this document is subject to legal disclaimers.
© NXP B.V. 2012. All rights reserved.

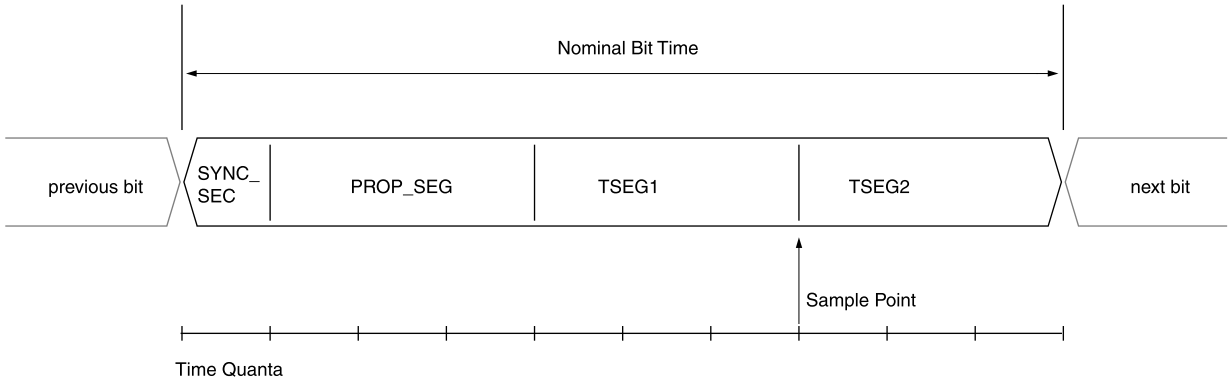

Fig 66. Bit timing

All information provided in this document is subject to legal disclaimers.

© NXP B.V. 2012. All rights reserved.

17.1 How to read this chapter

The C_CAN block is available in LPC11Cxx parts only (LPC11C00 series).

17.2 Features

The on-chip drivers are stored in boot ROM and offer CAN and CANopen initialization and communication features to user applications via a defined API. The following functions are included in the API:

- CAN set-up and initialization
- CAN send and receive messages
- CAN status
- CANopen Object Dictionary
- CANopen SDO expedited communication
- CANopen SDO segmented communication primitives
- CANopen SDO fall-back handler

17.3 General description

In addition to the CAN ISP, the boot ROM provides a CAN and CANopen API to simplify CAN application development. It covers initialization, configuration, basic CAN send/receive as well as a CANopen SDO interface. Callback functions are available to process receive events.

17.3.1 Differences to fully-compliant CANopen

While the bootloader uses the SDO communication protocol and the Object Dictionary data organization method, it is not a fully CiA 301 standard compliant CANopen node. In particular, the following features are not available or different to the standard:

- No Network Management (NMT) message processing.
- No Heartbeat Message, no entry 0x1017.
- Uses proprietary SDO Abort Codes to indicate device errors
- “Empty” SDO responses during SDO segmented download/write to the node are shortened to one data byte, rather than full eight data bytes as the standard describes. This to speed up the communication.
- Entry [1018h,1] Vendor ID reads 0x0000 0000 rather than an official CiA-assigned unique Vendor ID. This in particular because the chip will be incorporated into designs of customers who will become the “vendor” of the whole device. The host will have to use a different method to identify the CAN ISP devices.

All information provided in this document is subject to legal disclaimers.
© NXP B.V. 2012. All rights reserved.

17.4 API description

17.4.1 Calling the C_CAN API

A fixed location in ROM contains a pointer to the ROM driver table i.e. 0x1FFF 1FF8. This location is the same for all LPC11Cxx parts. The ROM driver table contains pointer to the CAN API table. Pointers to the various CAN API functions are stored in this table. CAN API functions can be called by using a C structure.

Figure 67 illustrates the pointer mechanism used to access the on-chip CAN API. On-chip RAM from address 0x1000 0050 to 0x1000 00B8 is used by the CAN API. This address range should not be used by the application. For applications using the on-chip CAN API, the linker control file should be modified appropriately to prevent usage of this area for application's variable storage.

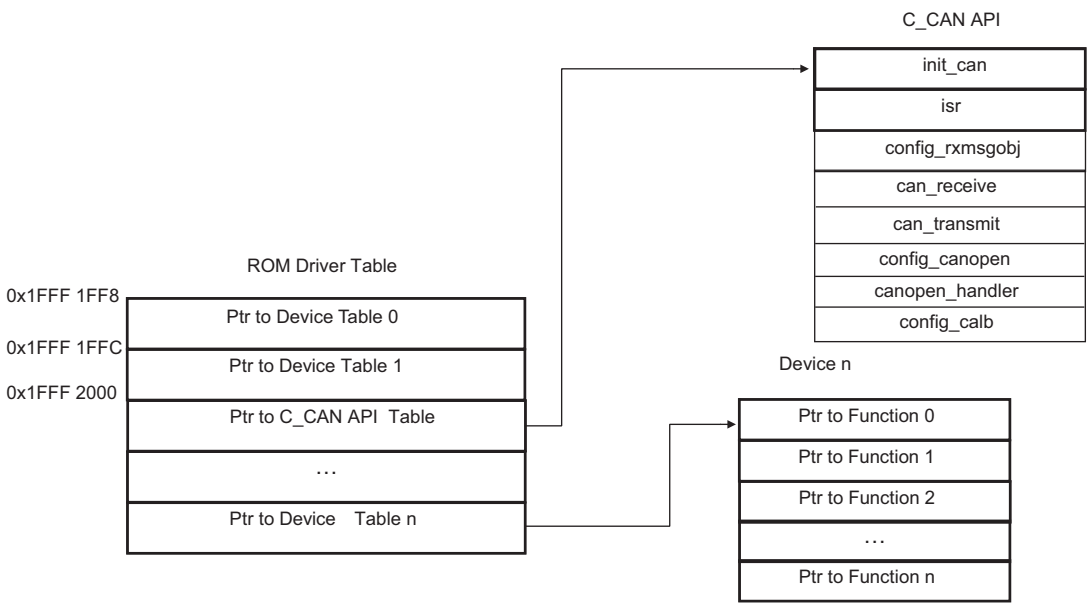

Fig 67. CAN API pointer structure

In C, the structure with the function list that is referenced to call the API functions looks as follows:

```
typedef struct _CAND {
  void    (*init_can)        (uint32_t * can_cfg, uint8_t isr_ena);
  void    (*isr)             (void);
  void    (*config_rxmsgobj) (CAN_MSG_OBJ * msg_obj);
  uint8_t (*can_receive)     (CAN_MSG_OBJ * msg_obj);
  void    (*can_transmit)    (CAN_MSG_OBJ * msg_obj);
  void    (*config_canopen)  (CAN_CANOPENCFG * canopen_cfg);
  void    (*canopen_handler) (void);
  void    (*config_calb)     (CAN_CALLBACKS * callback_cfg);
}  CAND;
```


All information provided in this document is subject to legal disclaimers.

© NXP B.V. 2012. All rights reserved.

17.4.2 CAN initialization

The CAN controller clock divider, the CAN bit rate is set, and the CAN controller is initialized based on an array of register values that are passed on via a pointer.

```
void init_can (uint32_t * can_cfg, uint8_t isr_ena)
```

The first 32-bit value in the array is applied to the CANCLKDIV register, the second value is applied to the CAN_BTR register.

The second parameter enables interrupts on the CAN controller level. Set to FALSE for polled communication.

Example call:

```
ROM **rom = (ROM **)(0x1fff1ff8 + 2 * sizeof(ROM **));

uint32_t CanApiClkInitTable[2] = {
  0x00000000UL, // CANCLKDIV
  0x00004DC5UL // CAN_BTR
};

(*rom)->pCANAPI->init_can(&CanApiCanInitTable[0]);
```

17.4.3 CAN interrupt handler

When the user application is active, the interrupt handlers are mapped in the user flash space. The user application must provide an interrupt handler for the CAN interrupt. In order to process CAN events and call the callback functions the application must call the CAN API interrupt handler directly from the interrupt handler routine. The CAN API interrupt handler takes appropriate action according to the data received and the status detected on the CAN bus.

```
void isr (void)
```

The CAN interrupt handler does not process CANopen messages.

Example call:

```
(*rom)->pCAND->isr();
```

For polled communication, the interrupt handler may be called manually as often as required. The callback functions for receive, transmit, and error will be executed as described and on the same level the interrupt handler was called from.

17.4.4 CAN Rx message object configuration

The CAN API supports and uses the full CAN model with 32 message objects. Any of the message objects can be used for receive or transmit of either 11-bit or 29-bit CAN messages. CAN messages that have their RTR-bit set (remote transmit) are also supported. For receive objects, a mask pattern for the message identifier allows to receive ranges of messages, up to receiving all CAN messages on the bus in a single message object. See also Section 16.7.3.4.

All information provided in this document is subject to legal disclaimers.
© NXP B.V. 2012. All rights reserved.

Transmit message objects are automatically configured when used.

```
// control bits for CAN_MSG_OBJ.mode_id
#define CAN_MSGOBJ_STD  0x00000000UL   // CAN 2.0a 11-bit ID
#define CAN_MSGOBJ_EXT  0x20000000UL   // CAN 2.0b 29-bit ID
#define CAN_MSGOBJ_DAT  0x00000000UL   // data frame
#define CAN_MSGOBJ_RTR  0x40000000UL   // rtr frame

typedef struct _CAN_MSG_OBJ {
  uint32_t  mode_id;
  uint32_t  mask;
  uint8_t   data[8];
  uint8_t   dlc;
  uint8_t   msgobj;
}  CAN_MSG_OBJ;
```

```
void config_rxmsgobj (CAN_MSG_OBJ * msg_obj)
```

Example call:

```
// Configure message object 1 to receive all 11-bit messages 0x000-0x00F
msg_obj.msgobj  = 1;
msg_obj.mode_id = 0x000;
msg_obj.mask    = 0x7F0;
(*rom)->pCAND-> config_rxmsgobj(&msg_obj);
```

17.4.5 CAN receive

The CAN receive function allows reading messages that have been received by an Rx message object. A pointer to a message object structure is passed to the receive function. Before calling, the number of the message object that is to be read has to be set in the structure.

```
void config_rxmsgobj (CAN_MSG_OBJ * msg_obj)
```

Example call:

```
// Read out received message
msg_obj.msgobj = 5;
(*rom)->pCAND->can_receive(&msg_obj);
```

17.4.6 CAN transmit

The CAN transmit function allows setting up a message object and triggering the transmission of a CAN message on the bus. 11-bit standard and 29-bit extended messages are supported as well as both standard data and remote-transmit (RTR) messages.

```
void config_txmsgobj (CAN_MSG_OBJ * msg_obj)
```

Example call:

All information provided in this document is subject to legal disclaimers.
© NXP B.V. 2012. All rights reserved.

```
msg_obj.msgobj = 3;
msg_obj.mode_id = 0x123UL;
msg_obj.mask = 0x0UL;
msg_obj.dlc = 1;
msg_obj.data[0] = 0x00;
(*rom)->pCAND->can_transmit(&msg_obj);
```

17.4.7 CANopen configuration

The CAN API supports an Object Dictionary interface and the SDO protocol. In order to activate it, the CANopen configuration function has to be called with a pointer to a structure with the CANopen Node ID (1...127), the message object numbers to use for receive and transmit SDOs, a flag to decide whether the CANopen SDO handling should happen in the interrupt serving function automatically or via the dedicated API function, and two pointers to Object Dictionary configuration tables and their sizes. One table contains all read-only, constant entries of four bytes or less. The second table contains all variable and writable entries as well as SDO segmented entries.

```
typedef struct _CAN_ODCONSTENTRY {
  uint16_t index;
  uint8_t  subindex;
  uint8_t  len;
  uint32_t val;
}  CAN_ODCONSTENTRY;

// upper-nibble values for CAN_ODENTRY.entrytype_len
#define OD_NONE 0x00 // Object Dictionary entry doesn't exist
#define OD_EXP_RO 0x10 // Object Dictionary entry expedited, read-only
#define OD_EXP_WO 0x20 // Object Dictionary entry expedited, write-only
#define OD_EXP_RW 0x30 // Object Dictionary entry expedited, read-write
#define OD_SEG_RO 0x40 // Object Dictionary entry segmented, read-only
#define OD_SEG_WO 0x50 // Object Dictionary entry segmented, write-only
#define OD_SEG_RW 0x60 // Object Dictionary entry segmented, read-write

typedef struct _CAN_ODENTRY {
  uint16_t index;
  uint8_t subindex;
  uint8_t entrytype_len;
  unint8_t isr_handled;
  uint8_t *val;
} CAN_ODENTRY;

typedef struct _CAN_CANOPENCFG {
  uint8_t node_id;
  uint8_t msgobj_rx;
  uint8_t msgobj_tx;
  uint32_t od_const_num;
  CAN_ODCONSTENTRY *od_const_table;
  uint32_t od_num;
  CAN_ODENTRY *od_table;
} CAN_CANOPENCFG;
```


All information provided in this document is subject to legal disclaimers.
© NXP B.V. 2012. All rights reserved.

Example OD tables and CANopen configuration structure:

```
// List of fixed, read-only Object Dictionary (OD) entries
// Expedited SDO only, length=1/2/4 bytes
const CAN_ODCONSTENTRY myConstOD [] = {
// index subindex length value
  { 0x1000, 0x00, 4, 0x54534554UL }, // "TEST"
  { 0x1018, 0x00, 1, 0x00000003UL },
  { 0x1018, 0x01, 4, 0x00000003UL },
  { 0x2000, 0x00, 1, (uint32_t)'M' },
};

// List of variable OD entries
// Expedited SDO with length=1/2/4 bytes
// Segmented SDO application-handled with length and value_pointer don't care
const CAN_ODENTRY myOD [] = {
// index subindex access_type|length value_pointer
  { 0x1001, 0x00, OD_EXP_RO | 1, (uint8_t *)&error_register },
  { 0x1018, 0x02, OD_EXP_RO | 4, (uint8_t *)&device_id },
  { 0x1018, 0x03, OD_EXP_RO | 4, (uint8_t *)&fw_ver },
  { 0x2001, 0x00, OD_EXP_RW | 2, (uint8_t *)&param },
  { 0x2200, 0x00, OD_SEG_RW, (uint8_t *)NULL },
};

// CANopen configuration structure
const CAN_CANOPENCFG myCANopen = {
  20, // node_id
  5, // msgobj_rx
  6, // msgobj_tx
  TRUE, // isr_handled
  sizeof(myConstOD)/sizeof(myConstOD[0]), // od_const_num
  (CAN_ODCONSTENTRY *)myConstOD, // od_const_table
  sizeof(myOD)/sizeof(myOD[0]), // od_num
  (CAN_ODENTRY *)myOD, // od_table
};
```

Example call:

```
// Initialize CANopen handler
(*rom)->pCAND->config_canopen((CAN_CANOPENCFG *)&myCANopen);
```

17.4.8 CANopen handler

The CANopen handler processes the CANopen SDO messages to access the Object Dictionary and calls the CANopen callback functions when initialized. It can either be called by the interrupt handler automatically (isr_handled == TRUE in CANopen initialization structure) or manually via the CANopen handler API function. If called manually, the CANopen handler has to be called cyclically as often as needed for the application.

In a typical CANopen application, SDO handling has the lowest priority and is done in the foreground rather than through interrupt processing.

All information provided in this document is subject to legal disclaimers.

© NXP B.V. 2012. All rights reserved.

Example call:

```
// Call CANopen handler
(*rom)->pCAND->canopen_handler();
```

17.4.9 CAN/CANopen callback functions

The CAN API supports callback functions for various events. The callback functions are published via an API function.

```
typedef struct _CAN_CALLBACKS {
  void (*CAN_rx)(uint8_t msg_obj);
  void (*CAN_tx)(uint8_t msg_obj);
  void (*CAN_error)(uint32_t error_info);
  uint32_t (*CANOPEN_sdo_read)(uint16_t index, uint8_t subindex);
  uint32_t (*CANOPEN_sdo_write)(
    uint16_t index, uint8_t subindex, uint8_t *dat_ptr);
  uint32_t (*CANOPEN_sdo_seg_read)(
    uint16_t index, uint8_t subindex, uint8_t openclose,
    uint8_t *length, uint8_t *data, uint8_t *last);
  uint32_t (*CANOPEN_sdo_seg_write)(
    uint16_t index, uint8_t subindex, uint8_t openclose,
    uint8_t length, uint8_t *data, uint8_t *fast_resp);
  uint8_t (*CANOPEN_sdo_req)(
    uint8_t length_req, uint8_t *req_ptr, uint8_t *length_resp,
    uint8_t *resp_ptr);
}  CAN_CALLBACKS;
```

Example callback table definition:

```
// List of callback function pointers
const CAN_CALLBACKS callbacks = {
  CAN_rx,
  CAN_tx,
  CAN_error,
  CANOPEN_sdo_exp_read,
  CANOPEN_sdo_exp_write,
  CANOPEN_sdo_seg_read,
  CANOPEN_sdo_seg_write,
  CANOPEN_sdo_req,
};
```

Example call:

```
// Publish callbacks
(*rom)->pCAND->config_calb((CAN_CALLBACKS *)&callbacks);
```

17.4.10 CAN message received callback

The CAN message received callback function is called on the interrupt level by the CAN interrupt handler.

Example call:

All information provided in this document is subject to legal disclaimers.
© NXP B.V. 2012. All rights reserved.

```
// CAN receive handler
void CAN_rx(uint8_t msgobj_num)
{
  // Read out received message
  msg_obj.msgobj = msgobj_num;
  (*rom)->pCAND->can_receive(&msg_obj);

  return;
}
```

Remark: The callback is not called if the user CANopen handler is activated for the message object that is used for SDO receive.

17.4.11 CAN message transmit callback

Called on the interrupt level by the CAN interrupt handler after a message has been successfully transmitted on the bus.

Example call:

```
// CAN transmit handler
void CAN_tx(uint8_t msgobj_num)
{
  // Reset flag used by application to wait for transmission finished
  if (wait_for_tx_finished == msgobj_num)
    wait_for_tx_finished = 0;

  return;
}
```

Remark: The callback is not called after the user CANopen handler has used a message object to transmit an SDO response.

17.4.12 CAN error callback

The CAN error callback function is called on the interrupt level by the CAN interrupt handler.

```
// error status bits
#define CAN_ERROR_NONE 0x00000000UL
#define CAN_ERROR_PASS 0x00000001UL
#define CAN_ERROR_WARN 0x00000002UL
#define CAN_ERROR_BOFF 0x00000004UL
#define CAN_ERROR_STUF 0x00000008UL
#define CAN_ERROR_FORM 0x00000010UL
#define CAN_ERROR_ACK 0x00000020UL
#define CAN_ERROR_BIT1 0x00000040UL
#define CAN_ERROR_BIT0 0x00000080UL
#define CAN_ERROR_CRC 0x00000100UL
```

Example call:

```
// CAN error handler
void CAN_error(uint32_t error_info)
```


All information provided in this document is subject to legal disclaimers.

© NXP B.V. 2012. All rights reserved.

```
  // If we went into bus off state, tell the application to
  // re-initialize the CAN controller
  if (error_info & CAN_ERROR_BOFF)
    reset_can = TRUE;

  return;
}
```

17.4.13 CANopen SDO expedited read callback

The CANopen SDO expedited read callback function is called by the CANopen handler. The callback function is called before the SDO response is generated, allowing to modify or update the data.

Example call:

```
// CANopen callback for expedited read accesses
uint32_t CANOPEN_sdo_exp_read(uint16_t index, uint8_t subindex)
{
  // Every read of [2001h,0] increases param by one
  if ((index == 0x2001) && (subindex==0))
    param++;

  return 0;
}
```

Remark: If the flag isr_handled was set to TRUE when initializing CANopen, this callback function will be called by the CAN API interrupt handler and therefore will execute on the interrupt level.

17.4.14 CANopen SDO expedited write callback

The CANopen SDO expedited write callback function is called by the CANopen handler. The callback passes on the new data and is called before the new data has been written, allowing to reject or condition the data.

Example call:

```
// CANopen callback for expedited write accesses
uint32_t CANOPEN_sdo_exp_write(uint16_t index, uint8_t subindex, uint8_t
*dat_ptr)
{
  // Writing 0xAA55 to entry [2001h,0] unlocks writing the config table
  if ((index == 0x2001) && (subindex == 0))
  if (*(uint16_t *)dat_ptr == 0xAA55)
    {
      write_config_ena = TRUE;
          return(TRUE);
    }
    else
      return(FALSE); // Reject any other value
}
```


All information provided in this document is subject to legal disclaimers.
© NXP B.V. 2012. All rights reserved.

Remark: If the flag isr_handled was set TRUE when initializing CANopen, this callback function will be called by the CAN API interrupt handler and therefore will execute on the interrupt level.

17.4.15 CANopen SDO segmented read callback

The CANopen SDO segmented read callback function is called by the CANopen handler. The callback function allows the following actions:

- inform about the opening of the read channel.
- provide data segments of up to seven bytes to the reading host.
- close the channel when all data has been read.
- abort the transmission at any time.

```
// Values for CANOPEN_sdo_seg_read/write() callback 'openclose' parameter
#define CAN_SDOSEG_SEGMENT 0 // segment read/write
#define CAN_SDOSEG_OPEN 1 // channel is opened
#define CAN_SDOSEG_CLOSE 2 // channel is closed
```

Example call (reading a buffer):

```
uint8_t read_buffer[0x123];

// CANopen callback for segmented read accesses
uint32_t CANOPEN_sdo_seg_read(
  uint16_t index, uint8_t subindex, uint8_t openclose,
  uint8_t *length, uint8_t *data, uint8_t *last)
{
  static uint16_t read_ofs;
  uint16_t i;

  if ((index == 0x2200) && (subindex==0))
  {
    if (openclose == CAN_SDOSEG_OPEN)
    {
      // Initialize the read buffer with "something"
      for (i=0; i<sizeof(read_buffer); i++)
      {
        read_buffer[i] = (i+5) + (i<<2);
      }
      read_ofs = 0;
    }
    else if (openclose == CAN_SDOSEG_SEGMENT)
    {
      i = 7;
      while (i && (read_ofs < sizeof(read_buffer)))
      {
        *data++ = read_buffer[read_ofs++];
        i--;
      }
      *length = 7-i;
      if (read_ofs == sizeof(read_buffer)) // The whole buffer read:
```


All information provided in this document is subject to legal disclaimers.

© NXP B.V. 2012. All rights reserved.

```
                                    // this is last segment
      {
        *last = TRUE;
      }
    }
    return 0;
  }
  else
  {
    return SDO_ABORT_NOT_EXISTS;
  }
}
```

Remark: If the flag isr_handled was set TRUE when initializing CANopen, this callback function will be called by the CAN API interrupt handler and therefore will execute on the interrupt level.

17.4.16 CANopen SDO segmented write callback

The CANopen SDO segmented write callback function is called by the CANopen handler. The callback function allows the following actions:

- inform about the opening and closing of the write channel.
- pass on data segments of up to seven bytes from the writing host.
- abort the transmission at any time, for example when there is a buffer overflow.

Responses can be selected to be 8-byte (CANopen standard compliant) or 1-byte (faster but not supported by all SDO clients).

```
// Values for CANOPEN_sdo_seg_read/write() callback 'openclose' parameter
#define CAN_SDOSEG_SEGMENT 0 // segment read/write
#define CAN_SDOSEG_OPEN 1 // channel is opened
#define CAN_SDOSEG_CLOSE 2 // channel is closed
```

Example call (writing a buffer):

```
uint8_t write_buffer[0x321];

// CANopen callback for segmented write accesses
uint32_t CANOPEN_sdo_seg_write(
  uint16_t index, uint8_t subindex, uint8_t openclose,
  uint8_t length, uint8_t *data, uint8_t *fast_resp)
{
  static uint16_t write_ofs;
  uint16_t i;

  if ((index == 0x2200) && (subindex==0))
  {
    if (openclose == CAN_SDOSEG_OPEN)
    {
      // Initialize the write buffer
      for (i=0; i<sizeof(write_buffer); i++)
      {
```


All information provided in this document is subject to legal disclaimers.

© NXP B.V. 2012. All rights reserved.

```
      write_buffer[i] = 0;
    }
    write_ofs = 0;
  }
  else if (openclose == CAN_SDOSEG_SEGMENT)
  {
    *fast_resp = TRUE;  // Use fast 1-byte segment write response
    i = length;
    while (i && (write_ofs < sizeof(write_buffer)))
    {
      write_buffer[write_ofs++] = *data++;
      i--;
    }
    if (i && (write_ofs >= sizeof(write_buffer))) // Too much data to write
    {
      return SDO_ABORT_TRANSFER;  // Data could not be written
    }
  }
  else if (openclose == CAN_SDOSEG_CLOSE)
  {
    // Write has successfully finished: mark the buffer valid etc.
  }
  return 0;
 }
 else
 {
  return SDO_ABORT_NOT_EXISTS;
 }
}
```

Remark: If the flag isr_handled was set TRUE when initializing CANopen, this callback function will be called by the CAN API interrupt handler and therefore will execute on the interrupt level.

17.4.17 CANopen fall-back SDO handler callback

The CANopen fall-back SDO handler callback function is called by the CANopen handler. This function is called whenever an SDO request could not be processed or would end in an SDO abort response. It is called with the full data buffer of the request and allows to generate any type of SDO response. This can be used to implement custom SDO handlers, for example to implement the SDO block transfer method.

```
// Return values for CANOPEN_sdo_req() callback
#define CAN_SDOREQ_NOTHANDLED 0 // process regularly, no impact
#define CAN_SDOREQ_HANDLED_SEND 1 // processed in callback, auto-send
                                  // returned msg
#define CAN_SDOREQ_HANDLED_NOSEND 2 // processed in callback, don't send
                                  // response
```


All information provided in this document is subject to legal disclaimers.

© NXP B.V. 2012. All rights reserved.

Example call (not implementing custom processing):

```
// CANopen callback for custom SDO request handler
uint8_t CANOPEN_sdo_req (
  uint8_t length, uint8_t *req_ptr, uint8_t *length_resp, uint8_t *resp_ptr)
{
  return CAN_SDOREQ_NOTHANDLED;
}
```

Remark: If the flag isr_handled was set TRUE when initializing CANopen, this callback function will be called by the CAN API interrupt handler and therefore will execute on the interrupt level.

All information provided in this document is subject to legal disclaimers.

© NXP B.V. 2012. All rights reserved.

18.1 How to read this chapter

The 16-bit timer blocks are identical for all LPC111x, LPC11D14, and LPC11Cxx parts in the LPC1100, LPC1100C, and LPC1100L series.

Pin-out variations

The match output MAT0 of timer 1 (CT16B1_MAT0) is not pinned out on parts LPC11C22 and LPC11C24.

18.2 Basic configuration

The CT16B0/1 are configured using the following registers:

1. Pins: The CT16B0/1 pins must be configured in the IOCONFIG register block (Section 7.4).
2. Power and peripheral clock: In the SYSAHBCLKCTRL register, set bit 7 and bit 8 (Table 21). The peripheral clock is provided by the system clock (see Table 20).

18.3 Features

- Two 16-bit counter/timers with a programmable 16-bit prescaler.
- Counter or timer operation.
- One 16-bit capture channel that can take a snapshot of the timer value when an input signal transitions. A capture event may also optionally generate an interrupt.
- Four 16-bit match registers that allow:
  - Continuous operation with optional interrupt generation on match.
  - Stop timer on match with optional interrupt generation.
  - Reset timer on match with optional interrupt generation.
- Up to three (CT16B0) or two (CT16B1) external outputs corresponding to match registers with the following capabilities:
  - Set LOW on match.
  - Set HIGH on match.
  - Toggle on match.
  - Do nothing on match.
- For each timer, up to four match registers can be configured as PWM allowing to use up to three match outputs as single edge controlled PWM outputs.

All information provided in this document is subject to legal disclaimers.

© NXP B.V. 2012. All rights reserved.

18.4 Applications

- Interval timer for counting internal events
- Pulse Width Demodulator via capture input
- Free-running timer
- Pulse Width Modulator via match outputs

18.5 Description

Each Counter/timer is designed to count cycles of the peripheral clock (PCLK) or an externally supplied clock and can optionally generate interrupts or perform other actions at specified timer values based on four match registers. The peripheral clock is provided by the system clock (see Figure 8). Each counter/timer also includes one capture input to trap the timer value when an input signal transitions, optionally generating an interrupt.

In PWM mode, three match registers on CT16B0 and two match registers on CT16B1 can be used to provide a single-edge controlled PWM output on the match output pins. It is recommended to use the match registers that are not pinned out to control the PWM cycle length.

Remark: The 16-bit counter/timer0 (CT16B0) and the 16-bit counter/timer1 (CT16B1) are functionally identical except for the peripheral base address.

18.6 Pin description

Table 278 gives a brief summary of each of the counter/timer related pins.

Table 278. Counter/timer pin description

Pin	Type	Description
CT16B0_CAP0 CT16B1_CAP0	Input	Capture Signal: A transition on a capture pin can be configured to load the Capture Register with the value in the counter/timer and optionally generate an interrupt. Counter/Timer block can select a capture signal as a clock source instead of the PCLK derived clock. For more details see Section 18.7.11.
CT16B0_MAT[2:0] CT16B1_MAT[1:0]	Output	External Match Outputs of CT16B0/1: When a match register of CT16B0/1 (MR3:0) equals the timer counter (TC), this output can either toggle, go LOW, go HIGH, or do nothing. The External Match Register (EMR) and the PWM Control Register (PWMCON) control the functionality of this output.

18.7 Register description

The 16-bit counter/timer0 contains the registers shown in Table 279 and the 16-bit counter/timer1 contains the registers shown in Table 280. More detailed descriptions follow.

All information provided in this document is subject to legal disclaimers.
© NXP B.V. 2012. All rights reserved.

Table 279. Register overview: 16-bit counter/timer 0 CT16B0 (base address 0x4000 C000)

Name	Access	Address offset	Description	Reset value[1]
TMR16B0IR	R/W	0x000	Interrupt Register (IR). The IR can be written to clear interrupts. The IR can be read to identify which of five possible interrupt sources are pending.	0
TMR16B0TCR	R/W	0x004	Timer Control Register (TCR). The TCR is used to control the Timer Counter functions. The Timer Counter can be disabled or reset through the TCR.	0
TMR16B0TC	R/W	0x008	Timer Counter (TC). The 16-bit TC is incremented every PR+1 cycles of PCLK. The TC is controlled through the TCR.	0
TMR16B0PR	R/W	0x00C	Prescale Register (PR). When the Prescale Counter (below) is equal to this value, the next clock increments the TC and clears the PC.	0
TMR16B0PC	R/W	0x010	Prescale Counter (PC). The 16-bit PC is a counter which is incremented to the value stored in PR. When the value in PR is reached, the TC is incremented and the PC is cleared. The PC is observable and controllable through the bus interface.	0
TMR16B0MCR	R/W	0x014	Match Control Register (MCR). The MCR is used to control if an interrupt is generated and if the TC is reset when a Match occurs.	0
TMR16B0MR0	R/W	0x018	Match Register 0 (MR0). MR0 can be enabled through the MCR to reset the TC, stop both the TC and PC, and/or generate an interrupt every time MR0 matches the TC.	0
TMR16B0MR1	R/W	0x01C	Match Register 1 (MR1). See MR0 description.	0
TMR16B0MR2	R/W	0x020	Match Register 2 (MR2). See MR0 description.	0
TMR16B0MR3	R/W	0x024	Match Register 3 (MR3). See MR0 description.	0
TMR16B0CCR	R/W	0x028	Capture Control Register (CCR). The CCR controls which edges of the capture inputs are used to load the Capture Registers and whether or not an interrupt is generated when a capture takes place.	0
TMR16B0CR0	RO	0x02C	Capture Register 0 (CR0). CR0 is loaded with the value of TC when there is an event on the CT16B0_CAP0 input.	0
TMR16B0EMR	R/W	0x03C	External Match Register (EMR). The EMR controls the match function and the external match pins CT16B0_MAT[2:0].	0
-	-	0x040 - 0x06C	reserved	-
TMR16B0CTCR	R/W	0x070	Count Control Register (CTCR). The CTCR selects between Timer and Counter mode, and in Counter mode selects the signal and edge(s) for counting.	0
TMR16B0PWMC	R/W	0x074	PWM Control Register (PWMCON). The PWMCON enables PWM mode for the external match pins CT16B0_MAT[2:0].	0

[1] Reset value reflects the data stored in used bits only. It does not include reserved bits content.

All information provided in this document is subject to legal disclaimers.
© NXP B.V. 2012. All rights reserved.

Table 280. Register overview: 16-bit counter/timer 1 CT16B1 (base address 0x4001 0000)

Name	Access	Address offset	Description	Reset value[1]
TMR16B1IR	R/W	0x000	Interrupt Register (IR). The IR can be written to clear interrupts. The IR can be read to identify which of five possible interrupt sources are pending.	0
TMR16B1TCR	R/W	0x004	Timer Control Register (TCR). The TCR is used to control the Timer Counter functions. The Timer Counter can be disabled or reset through the TCR.	0
TMR16B1TC	R/W	0x008	Timer Counter (TC). The 16-bit TC is incremented every PR+1 cycles of PCLK. The TC is controlled through the TCR.	0
TMR16B1PR	R/W	0x00C	Prescale Register (PR). When the Prescale Counter (below) is equal to this value, the next clock increments the TC and clears the PC.	0
TMR16B1PC	R/W	0x010	Prescale Counter (PC). The 16-bit PC is a counter which is incremented to the value stored in PR. When the value in PR is reached, the TC is incremented and the PC is cleared. The PC is observable and controllable through the bus interface.	0
TMR16B1MCR	R/W	0x014	Match Control Register (MCR). The MCR is used to control if an interrupt is generated and if the TC is reset when a Match occurs.	0
TMR16B1MR0	R/W	0x018	Match Register 0 (MR0). MR0 can be enabled through the MCR to reset the TC, stop both the TC and PC, and/or generate an interrupt every time MR0 matches the TC.	0
TMR16B1MR1	R/W	0x01C	Match Register 1 (MR1). See MR0 description.	0
TMR16B1MR2	R/W	0x020	Match Register 2 (MR2). See MR0 description.	0
TMR16B1MR3	R/W	0x024	Match Register 3 (MR3). See MR0 description.	0
TMR16B1CCR	R/W	0x028	Capture Control Register (CCR). The CCR controls which edges of the capture inputs are used to load the Capture Registers and whether or not an interrupt is generated when a capture takes place.	0
TMR16B1CR0	RO	0x02C	Capture Register 0 (CR0). CR0 is loaded with the value of TC when there is an event on the CT16B1_CAP0 input.	0
TMR16B1EMR	R/W	0x03C	External Match Register (EMR). The EMR controls the match function and the external match pins CT16B1_MAT[1:0].	0
-	-	0x040 - 0x06C	reserved	-
TMR16B1CTCR	R/W	0x070	Count Control Register (CTCR). The CTCR selects between Timer and Counter mode, and in Counter mode selects the signal and edge(s) for counting.	0
TMR16B1PWMC	R/W	0x074	PWM Control Register (PWMCON). The PWMCON enables PWM mode for the external match pins CT16B1_MAT[1:0].	0

[1] Reset value reflects the data stored in used bits only. It does not include reserved bits content.

18.7.1 Interrupt Register (TMR16B0IR and TMR16B1IR)

The Interrupt Register (IR) consists of four bits for the match interrupts and one bit for the capture interrupt. If an interrupt is generated then the corresponding bit in the IR will be HIGH. Otherwise, the bit will be LOW. Writing a logic one to the corresponding IR bit will reset the interrupt. Writing a zero has no effect.

All information provided in this document is subject to legal disclaimers. © NXP B.V. 2012. All rights reserved.

Table 281. Interrupt Register (TMR16B0IR - address 0x4000 C000 and TMR16B1IR - address 0x4001 0000) bit description

Bit	Symbol	Description	Reset value
0	MR0 Interrupt	Interrupt flag for match channel 0.	0
1	MR1 Interrupt	Interrupt flag for match channel 1.	0
2	MR2 Interrupt	Interrupt flag for match channel 2.	0
3	MR3 Interrupt	Interrupt flag for match channel 3.	0
4	CR0 Interrupt	Interrupt flag for capture channel 0 event.	0
31:5	-	Reserved	-

18.7.2 Timer Control Register (TMR16B0TCR and TMR16B1TCR)

The Timer Control Register (TCR) is used to control the operation of the counter/timer.

Table 282. Timer Control Register (TMR16B0TCR - address 0x4000 C004 and TMR16B1TCR - address 0x4001 0004) bit description

Bit	Symbol	Description	Reset value
0	CEn	Counter Enable. When one, the Timer Counter and Prescale Counter are enabled for counting. When zero, the counters are disabled.	0
1	CRst	Counter Reset. When one, the Timer Counter and the Prescale Counter are synchronously reset on the next positive edge of PCLK. The counters remain reset until TCR[1] is returned to zero.	0
31:2	-	Reserved, user software should not write ones to reserved bits. The value read from a reserved bit is not defined.	NA

18.7.3 Timer Counter (TMR16B0TC - address 0x4000 C008 and TMR16B1TC - address 0x4001 0008)

The 16-bit Timer Counter is incremented when the Prescale Counter reaches its terminal count. Unless it is reset before reaching its upper limit, the TC will count up through the value 0x0000 FFFF and then wrap back to the value 0x0000 0000. This event does not cause an interrupt, but a Match register can be used to detect an overflow if needed.

Table 283: Timer counter registers (TMR16B0TC, address 0x4000 C008 and TMR16B1TC 0x4001 0008) bit description

Bit	Symbol	Description	Reset value
15:0	TC	Timer counter value.	0
31:16	-	Reserved.	-

18.7.4 Prescale Register (TMR16B0PR - address 0x4000 C00C and TMR16B1PR - address 0x4001 000C)

The 16-bit Prescale Register specifies the maximum value for the Prescale Counter.

All information provided in this document is subject to legal disclaimers.
© NXP B.V. 2012. All rights reserved.

Table 284: Prescale registers (TMR16B0PR, address 0x4000 C00C and TMR16B1PR 0x4001 000C) bit description

Bit	Symbol	Description	Reset value
15:0	PR	Prescale max value.	0
31:16	-	Reserved.	-

18.7.5 Prescale Counter register (TMR16B0PC - address 0x4000 C010 and TMR16B1PC - address 0x4001 0010)

The 16-bit Prescale Counter controls division of PCLK by some constant value before it is applied to the Timer Counter. This allows control of the relationship between the resolution of the timer and the maximum time before the timer overflows. The Prescale Counter is incremented on every PCLK. When it reaches the value stored in the Prescale Register, the Timer Counter is incremented, and the Prescale Counter is reset on the next PCLK. This causes the TC to increment on every PCLK when PR = 0, every 2 PCLKs when PR = 1, etc.

Table 285: Prescale counter registers (TMR16B0PC, address 0x4001 C010 and TMR16B1PC 0x4000 0010) bit description

Bit	Symbol	Description	Reset value
15:0	PC	Prescale counter value.	0
31:16	-	Reserved.	-

18.7.6 Match Control Register (TMR16B0MCR and TMR16B1MCR)

The Match Control Register is used to control what operations are performed when one of the Match Registers matches the Timer Counter. The function of each of the bits is shown in Table 286.

Table 286. Match Control Register (TMR16B0MCR - address 0x4000 C014 and TMR16B1MCR - address 0x4001 0014) bit description

Bit	Symbol	Value	Description	Reset value
0	MR0I		Interrupt on MR0: an interrupt is generated when MR0 matches the value in the TC.	0
		1	Enabled	
		0	Disabled	
1	MR0R		Reset on MR0: the TC will be reset if MR0 matches it.	0
		1	Enabled	
		0	Disabled	
2	MR0S		Stop on MR0: the TC and PC will be stopped and TCR[0] will be set to 0 if MR0 matches the TC.	0
		1	Enabled	
		0	Disabled	
3	MR1I		Interrupt on MR1: an interrupt is generated when MR1 matches the value in the TC.	0
		1	Enabled	
		0	Disabled	

All information provided in this document is subject to legal disclaimers. © NXP B.V. 2012. All rights reserved.

Table 286. Match Control Register (TMR16B0MCR - address 0x4000 C014 and TMR16B1MCR - address 0x4001 0014) bit description *…continued*

Bit	Symbol	Value	Description	Reset value
4	MR1R		Reset on MR1: the TC will be reset if MR1 matches it.	0
		1	Enabled	
		0	Disabled	
5	MR1S		Stop on MR1: the TC and PC will be stopped and TCR[0] will be set to 0 if MR1 matches the TC.	0
		1	Enabled	
		0	Disabled	
6	MR2I		Interrupt on MR2: an interrupt is generated when MR2 matches the value in the TC.	0
		1	Enabled	
		0	Disabled	
7	MR2R		Reset on MR2: the TC will be reset if MR2 matches it.	0
		1	Enabled	
		0	Disabled	
8	MR2S		Stop on MR2: the TC and PC will be stopped and TCR[0] will be set to 0 if MR2 matches the TC.	0
		1	Enabled	
		0	Disabled	
9	MR3I		Interrupt on MR3: an interrupt is generated when MR3 matches the value in the TC.	0
		1	Enabled	
		0	Disabled	
10	MR3R		Reset on MR3: the TC will be reset if MR3 matches it.	0
		1	Enabled	
		0	Disabled	
11	MR3S		Stop on MR3: the TC and PC will be stopped and TCR[0] will be set to 0 if MR3 matches the TC.	0
		1	Enabled	
		0	Disabled	
31:12	-		Reserved, user software should not write ones to reserved bits. The value read from a reserved bit is not defined.	NA

18.7.7 Match Registers (TMR16B0MR0/1/2/3 - addresses 0x4000 C018/1C/20/24 and TMR16B1MR0/1/2/3 - addresses 0x4001 0018/1C/20/24)

The Match register values are continuously compared to the Timer Counter value. When the two values are equal, actions can be triggered automatically. The action possibilities are to generate an interrupt, reset the Timer Counter, or stop the timer. Actions are controlled by the settings in the MCR register.

All information provided in this document is subject to legal disclaimers.
© NXP B.V. 2012. All rights reserved.

Table 287: Match registers (TMR16B0MR0 to 3, addresses 0x4000 C018 to 24 and TMR16B1MR0 to 3, addresses 0x4001 0018 to 24) bit description

Bit	Symbol	Description	Reset value
15:0	MATCH	Timer counter match value.	0
31:16	-	Reserved.	-

18.7.8 Capture Control Register (TMR16B0CCR and TMR16B1CCR)

The Capture Control Register is used to control whether the Capture Register is loaded with the value in the Counter/timer when the capture event occurs, and whether an interrupt is generated by the capture event. Setting both the rising and falling bits at the same time is a valid configuration, resulting in a capture event for both edges. In the description below, n represents the Timer number, 0 or 1.

Table 288. Capture Control Register (TMR16B0CCR - address 0x4000 C028 and TMR16B1CCR - address 0x4001 0028) bit description

Bit	Symbol	Value	Description	Reset value
0	CAP0RE		Capture on CT16Bn_CAP0 rising edge: a sequence of 0 then 1 on CT16Bn_CAP0 will cause CR0 to be loaded with the contents of TC.	0
		1	Enabled	
		0	Disabled	
1	CAP0FE		Capture on CT16Bn_CAP0 falling edge: a sequence of 1 then 0 on CT16Bn_CAP0 will cause CR0 to be loaded with the contents of TC.	0
		1	Enabled	
		0	Disabled	
2	CAP0I		Interrupt on CT16Bn_CAP0 event: a CR0 load due to a CT16Bn_CAP0 event will generate an interrupt.	0
		1	Enabled	
		0	Disabled	
31:3	-	-	Reserved, user software should not write ones to reserved bits. The value read from a reserved bit is not defined.	NA

18.7.9 Capture Register (CT16B0CR0 - address 0x4000 C02C and CT16B1CR0 - address 0x4001 002C)

Each Capture register is associated with a device pin and may be loaded with the counter/timer value when a specified event occurs on that pin. The settings in the Capture Control Register register determine whether the capture function is enabled, and whether a capture event happens on the rising edge of the associated pin, the falling edge, or on both edges.

Table 289: Capture registers (TMR16B0CR0, address 0x4000 C02C and TMR16B1CR0, address 0x4001 002C) bit description

Bit	Symbol	Description	Reset value
15:0	CAP	Timer counter capture value.	0
31:16	-	Reserved.	-

All information provided in this document is subject to legal disclaimers.
© NXP B.V. 2012. All rights reserved.

18.7.10 External Match Register (TMR16B0EMR and TMR16B1EMR)

The External Match Register provides both control and status of the external match channels and external match pins CT16B0_MAT[2:0] and CT16B1_MAT[1:0].

If the match outputs are configured as PWM output in the PWMCON registers (Section 18.7.12), the function of the external match registers is determined by the PWM rules (Section 18.7.13 “Rules for single edge controlled PWM outputs” on page 336).

Table 290. External Match Register (TMR16B0EMR - address 0x4000 C03C and TMR16B1EMR - address 0x4001 003C) bit description

Bit	Symbol	Value	Description	Reset value
0	EM0		External Match 0. This bit reflects the state of output CT16B0_MAT0/CT16B1_MAT0, whether or not this output is connected to its pin. When a match occurs between the TC and MR0, this bit can either toggle, go LOW, go HIGH, or do nothing. Bits EMR[5:4] control the functionality of this output. This bit is driven to the CT16B0_MAT0/CT16B1_MAT0 pins if the match function is selected in the IOCON registers (0 = LOW, 1 = HIGH).	0
1	EM1		External Match 1. This bit reflects the state of output CT16B0_MAT1/CT16B1_MAT1, whether or not this output is connected to its pin. When a match occurs between the TC and MR1, this bit can either toggle, go LOW, go HIGH, or do nothing. Bits EMR[7:6] control the functionality of this output. This bit is driven to the CT16B0_MAT1/CT16B1_MAT1 pins if the match function is selected in the IOCON registers (0 = LOW, 1 = HIGH).	0
2	EM2		External Match 2. This bit reflects the state of output match channel 2, whether or not this output is connected to its pin. When a match occurs between the TC and MR2, this bit can either toggle, go LOW, go HIGH, or do nothing. Bits EMR[9:8] control the functionality of this output. Note that on counter/timer 0 this match channel is not pinned out. This bit is driven to the CT16B1_MAT2 pin if the match function is selected in the IOCON registers (0 = LOW, 1 = HIGH).	0
3	EM3		External Match 3. This bit reflects the state of output of match channel 3. When a match occurs between the TC and MR3, this bit can either toggle, go LOW, go HIGH, or do nothing. Bits EMR[11:10] control the functionality of this output. There is no output pin available for this channel on either of the 16-bit timers.	0
5:4	EMC0		External Match Control 0. Determines the functionality of External Match 0.	00
		0x0	Do Nothing.	
		0x1	Clear the corresponding External Match bit/output to 0 (CT16Bn_MATm pin is LOW if pinned out).	
		0x2	Set the corresponding External Match bit/output to 1 (CT16Bn_MATm pin is HIGH if pinned out).	
		0x3	Toggle the corresponding External Match bit/output.	
7:6	EMC1		External Match Control 1. Determines the functionality of External Match 1.	00
		0x0	Do Nothing.	
		0x1	Clear the corresponding External Match bit/output to 0 (CT16Bn_MATm pin is LOW if pinned out).	
		0x2	Set the corresponding External Match bit/output to 1 (CT16Bn_MATm pin is HIGH if pinned out).	
		0x3	Toggle the corresponding External Match bit/output.	

All information provided in this document is subject to legal disclaimers.
© NXP B.V. 2012. All rights reserved.

Table 290. External Match Register (TMR16B0EMR - address 0x4000 C03C and TMR16B1EMR - address 0x4001 003C) bit description

Bit	Symbol	Value	Description	Reset value
9:8	EMC2		External Match Control 2. Determines the functionality of External Match 2.	00
		0x0	Do Nothing.	
		0x1	Clear the corresponding External Match bit/output to 0 (CT16Bn_MATm pin is LOW if pinned out).	
		0x2	Set the corresponding External Match bit/output to 1 (CT16Bn_MATm pin is HIGH if pinned out).	
		0x3	Toggle the corresponding External Match bit/output.	
11:10	EMC3		External Match Control 3. Determines the functionality of External Match 3.	00
		0x0	Do Nothing.	
		0x1	Clear the corresponding External Match bit/output to 0 (CT16Bn_MATm pin is LOW if pinned out).	
		0x2	Set the corresponding External Match bit/output to 1 (CT16Bn_MATm pin is HIGH if pinned out).	
		0x3	Toggle the corresponding External Match bit/output.	
31:12	-		Reserved, user software should not write ones to reserved bits. The value read from a reserved bit is not defined.	NA

Table 291. External match control

EMR[11:10], EMR[9:8], EMR[7:6], or EMR[5:4]	Function
00	Do Nothing.
01	Clear the corresponding External Match bit/output to 0 (CT16Bn_MATm pin is LOW if pinned out).
10	Set the corresponding External Match bit/output to 1 (CT16Bn_MATm pin is HIGH if pinned out).
11	Toggle the corresponding External Match bit/output.

18.7.11 Count Control Register (TMR16B0CTCR and TMR16B1CTCR)

The Count Control Register (CTCR) is used to select between Timer and Counter mode, and in Counter mode to select the pin and edges for counting.

When Counter Mode is chosen as a mode of operation, the CAP input (selected by the CTCR bits 3:2) is sampled on every rising edge of the PCLK clock. After comparing two consecutive samples of this CAP input, one of the following four events is recognized: rising edge, falling edge, either of edges or no changes in the level of the selected CAP input. Only if the identified event occurs, and the event corresponds to the one selected by bits 1:0 in the CTCR register, will the Timer Counter register be incremented.

Effective processing of the externally supplied clock to the counter has some limitations. Since two successive rising edges of the PCLK clock are used to identify only one edge on the CAP selected input, the frequency of the CAP input can not exceed one half of the PCLK clock. Consequently, duration of the HIGH/LOW levels on the same CAP input in this case can not be shorter than $1/(2 \times PCLK)$.

All information provided in this document is subject to legal disclaimers. © NXP B.V. 2012. All rights reserved.

Table 292. Count Control Register (TMR16B0CTCR - address 0x4000 C070 and TMR16B1CTCR - address 0x4001 0070) bit description

Bit	Symbol	Value	Description	Reset value
1:0	CTM		Counter/Timer Mode. This field selects which rising PCLK edges can increment Timer's Prescale Counter (PC), or clear PC and increment Timer Counter (TC).	00
		0x0	Timer Mode: every rising PCLK edge	
		0x1	Counter Mode: TC is incremented on rising edges on the CAP input selected by bits 3:2.	
		0x2	Counter Mode: TC is incremented on falling edges on the CAP input selected by bits 3:2.	
		0x3	Counter Mode: TC is incremented on both edges on the CAP input selected by bits 3:2.	
3:2	CIS		Count Input Select. In counter mode (when bits 1:0 in this register are not 00), these bits select which CAP pin is sampled for clocking. **Note:** If Counter mode is selected in the CTCR register, bits 2:0 in the Capture Control Register (CCR) must be programmed as 000.	00
		0x0	CT16Bn_CAP0	
		0x1	CT16Bn_CAP1	
		0x2	Reserved.	
		0x3	Reserved.	
31:4	-	-	Reserved, user software should not write ones to reserved bits. The value read from a reserved bit is not defined.	-

18.7.12 PWM Control register (TMR16B0PWMC and TMR16B1PWMC)

The PWM Control Register is used to configure the match outputs as PWM outputs. Each match output can be independently set to perform either as PWM output or as match output whose function is controlled by the External Match Register (EMR).

For timer 0, three single-edge controlled PWM outputs can be selected on the CT16B0_MAT[2:0] outputs. For timer 1, two single-edged PWM outputs can be selected on the CT16B1_Mat[1:0] outputs. One additional match register determines the PWM cycle length. When a match occurs in any of the other match registers, the PWM output is set to HIGH. The timer is reset by the match register that is configured to set the PWM cycle length. When the timer is reset to zero, all currently HIGH match outputs configured as PWM outputs are cleared.

Table 293. PWM Control Register (TMR16B0PWMC - address 0x4000 C074 and TMR16B1PWMC- address 0x4001 0074) bit description

Bit	Symbol	Value	Description	Reset value
0	PWMEN0		PWM channel0 enable	0
		0	CT16Bn_MAT0 is controlled by EM0.	
		1	PWM mode is enabled for CT16Bn_MAT0.	

All information provided in this document is subject to legal disclaimers. © NXP B.V. 2012. All rights reserved.

Table 293. PWM Control Register (TMR16B0PWMC - address 0x4000 C074 and TMR16B1PWMC- address 0x4001 0074) bit description

Bit	Symbol	Value	Description	Reset value
1	PWMEN1		PWM channel1 enable	0
		0	CT16Bn_MAT1 is controlled by EM1.	
		1	PWM mode is enabled for CT16Bn_MAT1.	
2	PWMEN2		PWM channel2 enable	0
		0	Match channel 2 or pin CT16B0_MAT2 is controlled by EM2. Match channel 2 is not pinned out on timer 1.	
		1	PWM mode is enabled for match channel 2 or pin CT16B0_MAT2.	
3	PWMEN3		PWM channel3 enable **Note:** It is recommended to use match channel 3 to set the PWM cycle because it is not pinned out.	0
		0	Match channel 3 match channel 3 is controlled by EM3.	
		1	PWM mode is enabled for match channel 3match channel 3.	
31:4	-		Reserved, user software should not write ones to reserved bits. The value read from a reserved bit is not defined.	NA

18.7.13 Rules for single edge controlled PWM outputs

1. All single edge controlled PWM outputs go LOW at the beginning of each PWM cycle (timer is set to zero) unless their match value is equal to zero.
2. Each PWM output will go HIGH when its match value is reached. If no match occurs (i.e. the match value is greater than the PWM cycle length), the PWM output remains continuously LOW.
3. If a match value larger than the PWM cycle length is written to the match register, and the PWM signal is HIGH already, then the PWM signal will be cleared on the next start of the next PWM cycle.
4. If a match register contains the same value as the timer reset value (the PWM cycle length), then the PWM output will be reset to LOW on the next clock tick. Therefore, the PWM output will always consist of a one clock tick wide positive pulse with a period determined by the PWM cycle length (i.e. the timer reload value).
5. If a match register is set to zero, then the PWM output will go to HIGH the first time the timer goes back to zero and will stay HIGH continuously.

Note: When the match outputs are selected to serve as PWM outputs, the timer reset (MRnR) and timer stop (MRnS) bits in the Match Control Register MCR must be set to 0 except for the match register setting the PWM cycle length. For this register, set the MRnR bit to 1 to enable the timer reset when the timer value matches the value of the corresponding match register.

All information provided in this document is subject to legal disclaimers.
© NXP B.V. 2012. All rights reserved.

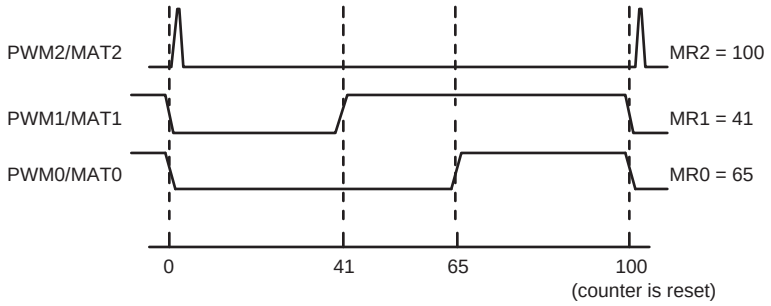

Fig 68. Sample PWM waveforms with a PWM cycle length of 100 (selected by MR3) and MAT3:0 enabled as PWM outputs by the PWCON register.

18.8 Example timer operation

Figure 69 shows a timer configured to reset the count and generate an interrupt on match. The prescaler is set to 2 and the match register set to 6. At the end of the timer cycle where the match occurs, the timer count is reset. This gives a full length cycle to the match value. The interrupt indicating that a match occurred is generated in the next clock after the timer reached the match value.

Figure 70 shows a timer configured to stop and generate an interrupt on match. The prescaler is again set to 2 and the match register set to 6. In the next clock after the timer reaches the match value, the timer enable bit in TCR is cleared, and the interrupt indicating that a match occurred is generated.

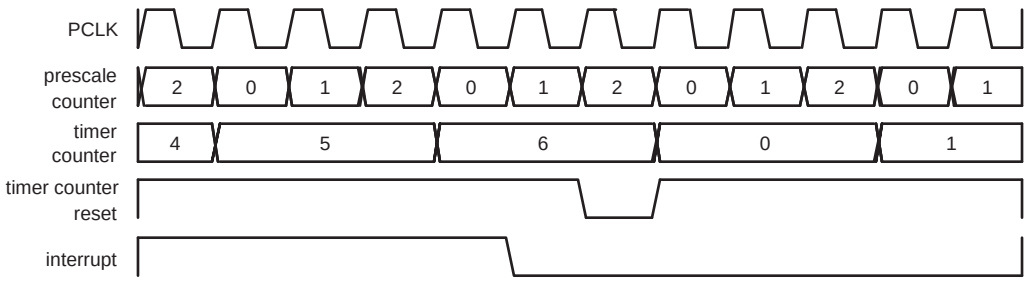

Fig 69. A timer cycle in which PR=2, MRx=6, and both interrupt and reset on match are enabled

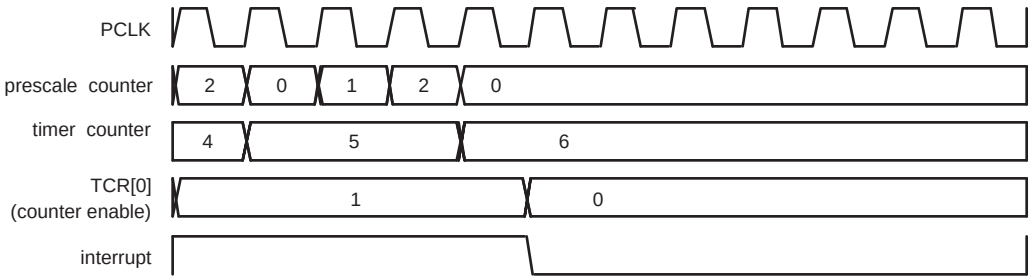

Fig 70. A timer cycle in which PR=2, MRx=6, and both interrupt and stop on match are enabled

All information provided in this document is subject to legal disclaimers.
© NXP B.V. 2012. All rights reserved.

18.9 Architecture

The block diagram for counter/timer0 and counter/timer1 is shown in Figure 71.

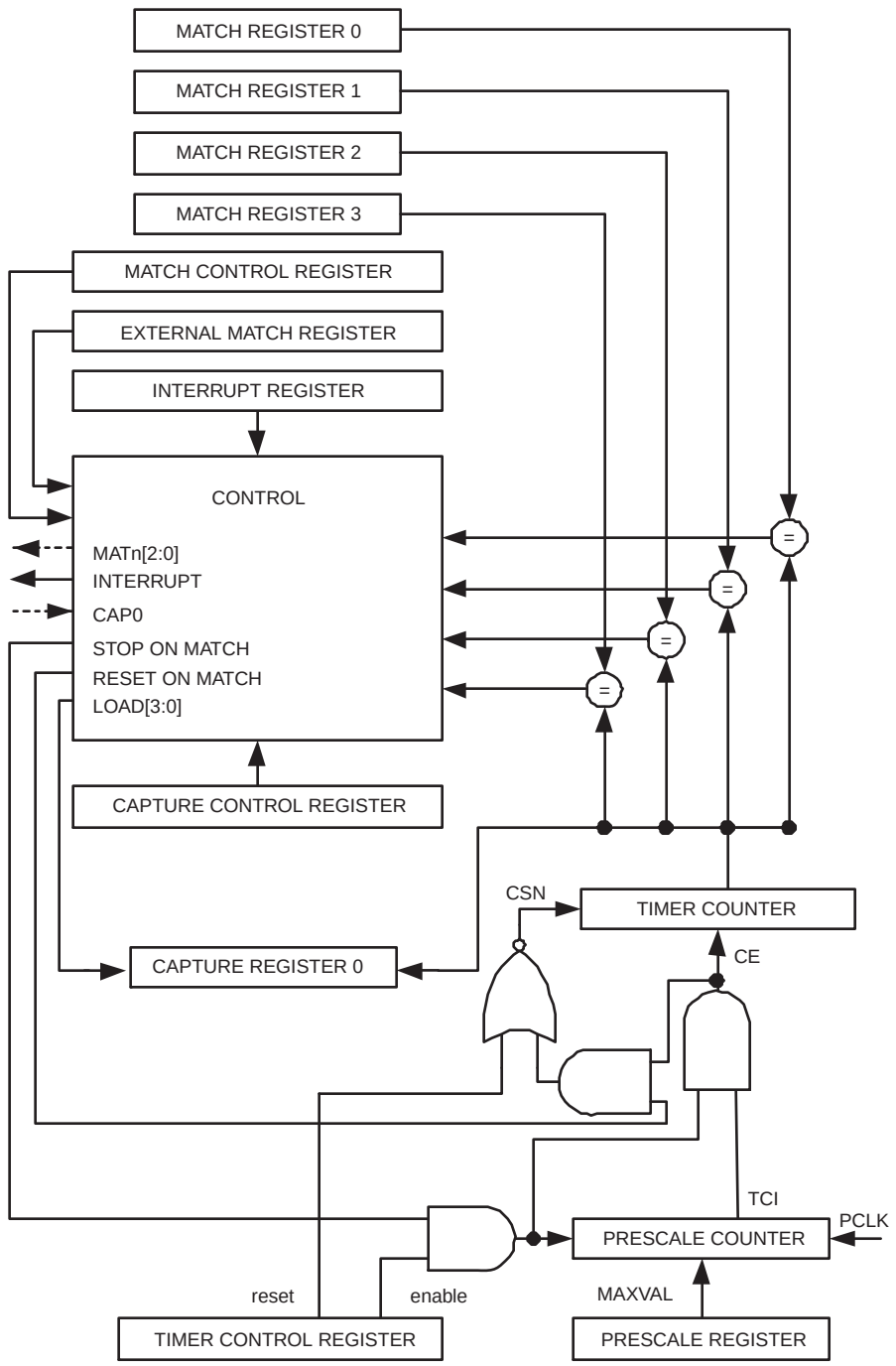

Fig 71. 16-bit counter/timer block diagram

All information provided in this document is subject to legal disclaimers.
© NXP B.V. 2012. All rights reserved.

19.1 How to read this chapter

The 16-bit timer blocks are identical for all LPC1100XL parts.

Compared to the timer block for the LPC1100/LPC1100L/LPC1100C series, the following features have been added:

- One additional capture input for each timer.
- Capture-clear function for easy pulse-width measurement (see Section 19.7.11).

19.2 Basic configuration

The CT16B0/1 are configured using the following registers:

1. Pins: The CT16B0/1 pins must be configured in the IOCONFIG register block (Section 7.4).
2. Power and peripheral clock: In the SYSAHBCLKCTRL register, set bit 7 and bit 8 (Table 21). The peripheral clock is provided by the system clock (see Table 20).

19.3 Features

- Two 16-bit counter/timers with a programmable 16-bit prescaler.
- Counter or timer operation.
- The timer and prescaler may be configured to be cleared on a designated capture event. This feature permits easy pulse-width measurement by clearing the timer on the leading edge of an input pulse and capturing the timer value on the trailing edge.
- Two 16-bit capture channels that can take a snapshot of the timer value when an input signal transitions. A capture event may also optionally generate an interrupt.
- Four 16-bit match registers that allow:
  - Continuous operation with optional interrupt generation on match.
  - Stop timer on match with optional interrupt generation.
  - Reset timer on match with optional interrupt generation.
- Up to three (CT16B0) or two (CT16B1) external outputs corresponding to match registers with the following capabilities:
  - Set LOW on match.
  - Set HIGH on match.
  - Toggle on match.
  - Do nothing on match.
- For each timer, up to four match registers can be configured as PWM allowing to use up to three match outputs as single edge controlled PWM outputs.

All information provided in this document is subject to legal disclaimers.
© NXP B.V. 2012. All rights reserved.

19.4 Applications

- Interval timer for counting internal events
- Pulse Width Demodulator via capture input
- Free-running timer
- Pulse Width Modulator via match outputs

19.5 Description

Each Counter/timer is designed to count cycles of the peripheral clock (PCLK) or an externally supplied clock and can optionally generate interrupts or perform other actions at specified timer values based on four match registers. The peripheral clock is provided by the system clock (see Figure 8). Each counter/timer also includes one capture input to trap the timer value when an input signal transitions, optionally generating an interrupt.

In PWM mode, three match registers on CT16B0 and two match registers on CT16B1 can be used to provide a single-edge controlled PWM output on the match output pins. It is recommended to use the match registers that are not pinned out to control the PWM cycle length.

Remark: The 16-bit counter/timer0 (CT16B0) and the 16-bit counter/timer1 (CT16B1) are functionally identical except for the peripheral base address.

19.6 Pin description

Table 294 gives a brief summary of each of the counter/timer related pins.

Table 294. Counter/timer pin description

Pin	Type	Description
CT16B0_CAP[1:0] CT16B1_CAP0[1:0]	Input	Capture Signal: A transition on a capture pin can be configured to load the Capture Register with the value in the counter/timer and optionally generate an interrupt. Counter/Timer block can select a capture signal as a clock source instead of the PCLK derived clock. For more details see Section 19.7.11.
CT16B0_MAT[2:0] CT16B1_MAT[1:0]	Output	External Match Outputs of CT16B0/1: When a match register of CT16B0/1 (MR3:0) equals the timer counter (TC), this output can either toggle, go LOW, go HIGH, or do nothing. The External Match Register (EMR) and the PWM Control Register (PWMCON) control the functionality of this output.

19.7 Register description

The 16-bit counter/timer0 contains the registers shown in Table 295 and the 16-bit counter/timer1 contains the registers shown in Table 296. More detailed descriptions follow.

All information provided in this document is subject to legal disclaimers.
© NXP B.V. 2012. All rights reserved.

Table 295. Register overview: 16-bit counter/timer 0 CT16B0 (base address 0x4000 C000)

Name	Access	Address offset	Description	Reset value[1]
TMR16B0IR	R/W	0x000	Interrupt Register (IR). The IR can be written to clear interrupts. The IR can be read to identify which of five possible interrupt sources are pending.	0
TMR16B0TCR	R/W	0x004	Timer Control Register (TCR). The TCR is used to control the Timer Counter functions. The Timer Counter can be disabled or reset through the TCR.	0
TMR16B0TC	R/W	0x008	Timer Counter (TC). The 16-bit TC is incremented every PR+1 cycles of PCLK. The TC is controlled through the TCR.	0
TMR16B0PR	R/W	0x00C	Prescale Register (PR). When the Prescale Counter (below) is equal to this value, the next clock increments the TC and clears the PC.	0
TMR16B0PC	R/W	0x010	Prescale Counter (PC). The 16-bit PC is a counter which is incremented to the value stored in PR. When the value in PR is reached, the TC is incremented and the PC is cleared. The PC is observable and controllable through the bus interface.	0
TMR16B0MCR	R/W	0x014	Match Control Register (MCR). The MCR is used to control if an interrupt is generated and if the TC is reset when a Match occurs.	0
TMR16B0MR0	R/W	0x018	Match Register 0 (MR0). MR0 can be enabled through the MCR to reset the TC, stop both the TC and PC, and/or generate an interrupt every time MR0 matches the TC.	0
TMR16B0MR1	R/W	0x01C	Match Register 1 (MR1). See MR0 description.	0
TMR16B0MR2	R/W	0x020	Match Register 2 (MR2). See MR0 description.	0
TMR16B0MR3	R/W	0x024	Match Register 3 (MR3). See MR0 description.	0
TMR16B0CCR	R/W	0x028	Capture Control Register (CCR). The CCR controls which edges of the capture inputs are used to load the Capture Registers and whether or not an interrupt is generated when a capture takes place.	0
TMR16B0CR0	RO	0x02C	Capture Register 0 (CR0). CR0 is loaded with the value of TC when there is an event on the CT16B0_CAP0 input.	0
TMR16B0CR1	RO	0x030	Capture Register 1 (CR1). CR1 is loaded with the value of TC when there is an event on the CT16B0_CAP1 input.	0
-	-	0x034 - 0x038	Reserved	-
TMR16B0EMR	R/W	0x03C	External Match Register (EMR). The EMR controls the match function and the external match pins CT16B0_MAT[2:0].	0
-	-	0x040 - 0x06C	Reserved	-
TMR16B0CTCR	R/W	0x070	Count Control Register (CTCR). The CTCR selects between Timer and Counter mode, and in Counter mode selects the signal and edge(s) for counting.	0
TMR16B0PWMC	R/W	0x074	PWM Control Register (PWMCON). The PWMCON enables PWM mode for the external match pins CT16B0_MAT[2:0].	0

[1] Reset value reflects the data stored in used bits only. It does not include reserved bits content.

All information provided in this document is subject to legal disclaimers.
© NXP B.V. 2012. All rights reserved.

Table 296. Register overview: 16-bit counter/timer 1 CT16B1 (base address 0x4001 0000)

Name	Access	Address offset	Description	Reset value[1]
TMR16B1IR	R/W	0x000	Interrupt Register (IR). The IR can be written to clear interrupts. The IR can be read to identify which of five possible interrupt sources are pending.	0
TMR16B1TCR	R/W	0x004	Timer Control Register (TCR). The TCR is used to control the Timer Counter functions. The Timer Counter can be disabled or reset through the TCR.	0
TMR16B1TC	R/W	0x008	Timer Counter (TC). The 16-bit TC is incremented every PR+1 cycles of PCLK. The TC is controlled through the TCR.	0
TMR16B1PR	R/W	0x00C	Prescale Register (PR). When the Prescale Counter (below) is equal to this value, the next clock increments the TC and clears the PC.	0
TMR16B1PC	R/W	0x010	Prescale Counter (PC). The 16-bit PC is a counter which is incremented to the value stored in PR. When the value in PR is reached, the TC is incremented and the PC is cleared. The PC is observable and controllable through the bus interface.	0
TMR16B1MCR	R/W	0x014	Match Control Register (MCR). The MCR is used to control if an interrupt is generated and if the TC is reset when a Match occurs.	0
TMR16B1MR0	R/W	0x018	Match Register 0 (MR0). MR0 can be enabled through the MCR to reset the TC, stop both the TC and PC, and/or generate an interrupt every time MR0 matches the TC.	0
TMR16B1MR1	R/W	0x01C	Match Register 1 (MR1). See MR0 description.	0
TMR16B1MR2	R/W	0x020	Match Register 2 (MR2). See MR0 description.	0
TMR16B1MR3	R/W	0x024	Match Register 3 (MR3). See MR0 description.	0
TMR16B1CCR	R/W	0x028	Capture Control Register (CCR). The CCR controls which edges of the capture inputs are used to load the Capture Registers and whether or not an interrupt is generated when a capture takes place.	0
TMR16B1CR0	RO	0x02C	Capture Register 0 (CR0). CR0 is loaded with the value of TC when there is an event on the CT16B1_CAP0 input.	0
TMR16B1CR1	RO	0x030	Capture Register 1 (CR1). CR1 is loaded with the value of TC when there is an event on the CT16B1_CAP1 input.	0
-	-	0x034 - 0x038	Reserved	-
TMR16B1EMR	R/W	0x03C	External Match Register (EMR). The EMR controls the match function and the external match pins CT16B1_MAT[1:0].	0
-	-	0x040 - 0x06C	Reserved	-
TMR16B1CTCR	R/W	0x070	Count Control Register (CTCR). The CTCR selects between Timer and Counter mode, and in Counter mode selects the signal and edge(s) for counting.	0
TMR16B1PWMC	R/W	0x074	PWM Control Register (PWMCON). The PWMCON enables PWM mode for the external match pins CT16B1_MAT[1:0].	0

[1] Reset value reflects the data stored in used bits only. It does not include reserved bits content.

All information provided in this document is subject to legal disclaimers.
© NXP B.V. 2012. All rights reserved.

19.7.1 Interrupt Register (TMR16B0IR and TMR16B1IR)

The Interrupt Register (IR) consists of four bits for the match interrupts and one bit for the capture interrupt. If an interrupt is generated then the corresponding bit in the IR will be HIGH. Otherwise, the bit will be LOW. Writing a logic one to the corresponding IR bit will reset the interrupt. Writing a zero has no effect.

Table 297. Interrupt Register (TMR16B0IR - address 0x4000 C000 and TMR16B1IR - address 0x4001 0000) bit description

Bit	Symbol	Description	Reset value
0	MR0INT	Interrupt flag for match channel 0.	0
1	MR1INT	Interrupt flag for match channel 1.	0
2	MR2INT	Interrupt flag for match channel 2.	0
3	MR3INT	Interrupt flag for match channel 3.	0
4	CR0INT	Interrupt flag for capture channel 0 event.	0
5	CR1INT	Interrupt flag for capture channel 1 event.	0
31:6	-	Reserved	-

19.7.2 Timer Control Register (TMR16B0TCR and TMR16B1TCR)

The Timer Control Register (TCR) is used to control the operation of the counter/timer.

Table 298. Timer Control Register (TMR16B0TCR - address 0x4000 C004 and TMR16B1TCR - address 0x4001 0004) bit description

Bit	Symbol	Description	Reset value
0	CEN	Counter Enable. When one, the Timer Counter and Prescale Counter are enabled for counting. When zero, the counters are disabled.	0
1	CRST	Counter Reset. When one, the Timer Counter and the Prescale Counter are synchronously reset on the next positive edge of PCLK. The counters remain reset until TCR[1] is returned to zero.	0
31:2	-	Reserved, user software should not write ones to reserved bits. The value read from a reserved bit is not defined.	NA

19.7.3 Timer Counter (TMR16B0TC - address 0x4000 C008 and TMR16B1TC - address 0x4001 0008)

The 16-bit Timer Counter is incremented when the Prescale Counter reaches its terminal count. Unless it is reset before reaching its upper limit, the TC will count up through the value 0x0000 FFFF and then wrap back to the value 0x0000 0000. This event does not cause an interrupt, but a Match register can be used to detect an overflow if needed.

Table 299: Timer counter registers (TMR16B0TC, address 0x4000 C008 and TMR16B1TC 0x4001 0008) bit description

Bit	Symbol	Description	Reset value
15:0	TC	Timer counter value.	0
31:16	-	Reserved.	-

All information provided in this document is subject to legal disclaimers.
© NXP B.V. 2012. All rights reserved.

19.7.4 Prescale Register (TMR16B0PR - address 0x4000 C00C and TMR16B1PR - address 0x4001 000C)

The 16-bit Prescale Register specifies the maximum value for the Prescale Counter.

Table 300: Prescale registers (TMR16B0PR, address 0x4000 C00C and TMR16B1PR 0x4001 000C) bit description

Bit	Symbol	Description	Reset value
15:0	PR	Prescale max value.	0
31:16	-	Reserved.	-

19.7.5 Prescale Counter register (TMR16B0PC - address 0x4000 C010 and TMR16B1PC - address 0x4001 0010)

The 16-bit Prescale Counter controls division of PCLK by some constant value before it is applied to the Timer Counter. This allows control of the relationship between the resolution of the timer and the maximum time before the timer overflows. The Prescale Counter is incremented on every PCLK. When it reaches the value stored in the Prescale Register, the Timer Counter is incremented, and the Prescale Counter is reset on the next PCLK. This causes the TC to increment on every PCLK when PR = 0, every 2 PCLKs when PR = 1, etc.

Table 301: Prescale counter registers (TMR16B0PC, address 0x4001 C010 and TMR16B1PC 0x4000 0010) bit description

Bit	Symbol	Description	Reset value
15:0	PC	Prescale counter value.	0
31:16	-	Reserved.	-

19.7.6 Match Control Register (TMR16B0MCR and TMR16B1MCR)

The Match Control Register is used to control what operations are performed when one of the Match Registers matches the Timer Counter. The function of each of the bits is shown in Table 302.

Table 302. Match Control Register (TMR16B0MCR - address 0x4000 C014 and TMR16B1MCR - address 0x4001 0014) bit description

Bit	Symbol	Value	Description	Reset value
0	MR0I		Interrupt on MR0: an interrupt is generated when MR0 matches the value in the TC.	0
		1	Enabled	
		0	Disabled	
1	MR0R		Reset on MR0: the TC will be reset if MR0 matches it.	0
		1	Enabled	
		0	Disabled	
2	MR0S		Stop on MR0: the TC and PC will be stopped and TCR[0] will be set to 0 if MR0 matches the TC.	0
		1	Enabled	
		0	Disabled	

All information provided in this document is subject to legal disclaimers. © NXP B.V. 2012. All rights reserved.

Table 302. Match Control Register (TMR16B0MCR - address 0x4000 C014 and TMR16B1MCR - address 0x4001 0014) bit description *…continued*

Bit	Symbol	Value	Description	Reset value
3	MR1I		Interrupt on MR1: an interrupt is generated when MR1 matches the value in the TC.	0
		1	Enabled	
		0	Disabled	
4	MR1R		Reset on MR1: the TC will be reset if MR1 matches it.	0
		1	Enabled	
		0	Disabled	
5	MR1S		Stop on MR1: the TC and PC will be stopped and TCR[0] will be set to 0 if MR1 matches the TC.	0
		1	Enabled	
		0	Disabled	
6	MR2I		Interrupt on MR2: an interrupt is generated when MR2 matches the value in the TC.	0
		1	Enabled	
		0	Disabled	
7	MR2R		Reset on MR2: the TC will be reset if MR2 matches it.	0
		1	Enabled	
		0	Disabled	
8	MR2S		Stop on MR2: the TC and PC will be stopped and TCR[0] will be set to 0 if MR2 matches the TC.	0
		1	Enabled	
		0	Disabled	
9	MR3I		Interrupt on MR3: an interrupt is generated when MR3 matches the value in the TC.	0
		1	Enabled	
		0	Disabled	
10	MR3R		Reset on MR3: the TC will be reset if MR3 matches it.	0
		1	Enabled	
		0	Disabled	
11	MR3S		Stop on MR3: the TC and PC will be stopped and TCR[0] will be set to 0 if MR3 matches the TC.	0
		1	Enabled	
		0	Disabled	
31:12	-		Reserved, user software should not write ones to reserved bits. The value read from a reserved bit is not defined.	NA

19.7.7 Match Registers (TMR16B0MR0/1/2/3 - addresses 0x4000 C018/1C/20/24 and TMR16B1MR0/1/2/3 - addresses 0x4001 0018/1C/20/24)

The Match register values are continuously compared to the Timer Counter value. When the two values are equal, actions can be triggered automatically. The action possibilities are to generate an interrupt, reset the Timer Counter, or stop the timer. Actions are controlled by the settings in the MCR register.

All information provided in this document is subject to legal disclaimers.
© NXP B.V. 2012. All rights reserved.

Table 303: Match registers (TMR16B0MR0 to 3, addresses 0x4000 C018 to 24 and TMR16B1MR0 to 3, addresses 0x4001 0018 to 24) bit description

Bit	Symbol	Description	Reset value
15:0	MATCH	Timer counter match value.	0
31:16	-	Reserved.	-

19.7.8 Capture Control Register (TMR16B0CCR and TMR16B1CCR)

The Capture Control Register is used to control whether the Capture Register is loaded with the value in the Counter/timer when the capture event occurs, and whether an interrupt is generated by the capture event. Setting both the rising and falling bits at the same time is a valid configuration, resulting in a capture event for both edges. In the description below, n represents the Timer number, 0 or 1.

Table 304. Capture Control Register (TMR16B0CCR - address 0x4000 C028 and TMR16B1CCR - address 0x4001 0028) bit description

Bit	Symbol	Value	Description	Reset value
0	CAP0RE		Capture on CT16Bn_CAP0 rising edge: a sequence of 0 then 1 on CT16Bn_CAP0 will cause CR0 to be loaded with the contents of TC.	0
		1	Enabled	
		0	Disabled	
1	CAP0FE		Capture on CT16Bn_CAP0 falling edge: a sequence of 1 then 0 on CT16Bn_CAP0 will cause CR0 to be loaded with the contents of TC.	0
		1	Enabled	
		0	Disabled	
2	CAP0I		Interrupt on CT16Bn_CAP0 event: a CR0 load due to a CT16Bn_CAP0 event will generate an interrupt.	0
		1	Enabled	
		0	Disabled	
3	CAP1RE		Capture on CT16Bn_CAP1 rising edge: a sequence of 0 then 1 on CT16Bn_CAP1 will cause CR1 to be loaded with the contents of TC.	0
		1	Enabled	
		0	Disabled	
4	CAP1FE		Capture on CT16Bn_CAP1 falling edge: a sequence of 1 then 0 on CT16Bn_CAP1 will cause CR1 to be loaded with the contents of TC.	0
		1	Enabled	
		0	Disabled	
5	CAP1I		Interrupt on CT16Bn_CAP1 event: a CR1 load due to a CT16Bn_CAP1 event will generate an interrupt.	0
		1	Enabled	
		0	Disabled	
31:6	-	-	Reserved, user software should not write ones to reserved bits. The value read from a reserved bit is not defined.	NA

All information provided in this document is subject to legal disclaimers.
© NXP B.V. 2012. All rights reserved.

19.7.9 Capture Register (CT16B0CR0/1 - address 0x4000 C02C/30 and CT16B1CR0/1 - address 0x4001 002C/30)

Each Capture register is associated with a device pin and may be loaded with the counter/timer value when a specified event occurs on that pin. The settings in the Capture Control Register register determine whether the capture function is enabled, and whether a capture event happens on the rising edge of the associated pin, the falling edge, or on both edges.

Table 305: Capture registers (TMR16B0CR0/1, address 0x4000 C02C/30 and TMR16B1CR0/1, address 0x4001 002C/30) bit description

Bit	Symbol	Description	Reset value
15:0	CAP	Timer counter capture value.	0
31:16	-	Reserved.	-

19.7.10 External Match Register (TMR16B0EMR and TMR16B1EMR)

The External Match Register provides both control and status of the external match channels and external match pins CT16B0_MAT[2:0] and CT16B1_MAT[1:0].

If the match outputs are configured as PWM output in the PWMCON registers (Section 19.7.12), the function of the external match registers is determined by the PWM rules (Section 19.7.13 “Rules for single edge controlled PWM outputs” on page 351).

Table 306. External Match Register (TMR16B0EMR - address 0x4000 C03C and TMR16B1EMR - address 0x4001 003C) bit description

Bit	Symbol	Value	Description	Reset value
0	EM0		External Match 0. This bit reflects the state of output CT16B0_MAT0/CT16B1_MAT0, whether or not this output is connected to its pin. When a match occurs between the TC and MR0, this bit can either toggle, go LOW, go HIGH, or do nothing. Bits EMR[5:4] control the functionality of this output. This bit is driven to the CT16B0_MAT0/CT16B1_MAT0 pins if the match function is selected in the IOCON registers (0 = LOW, 1 = HIGH).	0
1	EM1		External Match 1. This bit reflects the state of output CT16B0_MAT1/CT16B1_MAT1, whether or not this output is connected to its pin. When a match occurs between the TC and MR1, this bit can either toggle, go LOW, go HIGH, or do nothing. Bits EMR[7:6] control the functionality of this output. This bit is driven to the CT16B0_MAT1/CT16B1_MAT1 pins if the match function is selected in the IOCON registers (0 = LOW, 1 = HIGH).	0
2	EM2		External Match 2. This bit reflects the state of output match channel 2, whether or not this output is connected to its pin. When a match occurs between the TC and MR2, this bit can either toggle, go LOW, go HIGH, or do nothing. Bits EMR[9:8] control the functionality of this output. Note that on counter/timer 0 this match channel is not pinned out. This bit is driven to the CT16B1_MAT2 pin if the match function is selected in the IOCON registers (0 = LOW, 1 = HIGH).	0
3	EM3		External Match 3. This bit reflects the state of output of match channel 3. When a match occurs between the TC and MR3, this bit can either toggle, go LOW, go HIGH, or do nothing. Bits EMR[11:10] control the functionality of this output. There is no output pin available for this channel on either of the 16-bit timers.	0

All information provided in this document is subject to legal disclaimers. © NXP B.V. 2012. All rights reserved.

Table 306. External Match Register (TMR16B0EMR - address 0x4000 C03C and TMR16B1EMR - address 0x4001 003C) bit description

Bit	Symbol	Value	Description	Reset value
5:4	EMC0		External Match Control 0. Determines the functionality of External Match 0.	00
		0x0	Do Nothing.	
		0x1	Clear the corresponding External Match bit/output to 0 (CT16Bn_MATm pin is LOW if pinned out).	
		0x2	Set the corresponding External Match bit/output to 1 (CT16Bn_MATm pin is HIGH if pinned out).	
		0x3	Toggle the corresponding External Match bit/output.	
7:6	EMC1		External Match Control 1. Determines the functionality of External Match 1.	00
		0x0	Do Nothing.	
		0x1	Clear the corresponding External Match bit/output to 0 (CT16Bn_MATm pin is LOW if pinned out).	
		0x2	Set the corresponding External Match bit/output to 1 (CT16Bn_MATm pin is HIGH if pinned out).	
		0x3	Toggle the corresponding External Match bit/output.	
9:8	EMC2		External Match Control 2. Determines the functionality of External Match 2.	00
		0x0	Do Nothing.	
		0x1	Clear the corresponding External Match bit/output to 0 (CT16Bn_MATm pin is LOW if pinned out).	
		0x2	Set the corresponding External Match bit/output to 1 (CT16Bn_MATm pin is HIGH if pinned out).	
		0x3	Toggle the corresponding External Match bit/output.	
11:10	EMC3		External Match Control 3. Determines the functionality of External Match 3.	00
		0x0	Do Nothing.	
		0x1	Clear the corresponding External Match bit/output to 0 (CT16Bn_MATm pin is LOW if pinned out).	
		0x2	Set the corresponding External Match bit/output to 1 (CT16Bn_MATm pin is HIGH if pinned out).	
		0x3	Toggle the corresponding External Match bit/output.	
31:12	-		Reserved, user software should not write ones to reserved bits. The value read from a reserved bit is not defined.	NA

Table 307. External match control

EMR[11:10], EMR[9:8], EMR[7:6], or EMR[5:4]	Function
00	Do Nothing.
01	Clear the corresponding External Match bit/output to 0 (CT16Bn_MATm pin is LOW if pinned out).
10	Set the corresponding External Match bit/output to 1 (CT16Bn_MATm pin is HIGH if pinned out).
11	Toggle the corresponding External Match bit/output.

All information provided in this document is subject to legal disclaimers.
© NXP B.V. 2012. All rights reserved.

19.7.11 Count Control Register (TMR16B0CTCR and TMR16B1CTCR)

The Count Control Register (CTCR) is used to select between Timer and Counter mode, and in Counter mode to select the pin and edge(s) for counting.

When Counter Mode is chosen as a mode of operation, the CAP input (selected by the CTCR bits 3:2) is sampled on every rising edge of the PCLK clock. After comparing two consecutive samples of this CAP input, one of the following four events is recognized: rising edge, falling edge, either of edges or no changes in the level of the selected CAP input. Only if the identified event occurs, and the event corresponds to the one selected by bits 1:0 in the CTCR register, will the Timer Counter register be incremented.

Effective processing of the externally supplied clock to the counter has some limitations. Since two successive rising edges of the PCLK clock are used to identify only one edge on the CAP selected input, the frequency of the CAP input can not exceed one half of the PCLK clock. Consequently, duration of the HIGH/LOW levels on the same CAP input in this case can not be shorter than 1/(2 × PCLK).

Bits 7:4 of this register are used to enable and configure the capture-clears-timer feature. This feature allows for a designated edge on a particular CAP input to reset the timer to all zeros. Using this mechanism to clear the timer on the leading edge of an input pulse and performing a capture on the trailing edge permits direct pulse-width measurement using a single capture input without the need to perform a subtraction operation in software.

Table 308. Count Control Register (TMR16B0CTCR - address 0x4000 C070 and TMR16B1CTCR - address 0x4001 0070) bit description

Bit	Symbol	Value	Description	Reset value
1:0	CTM		Counter/Timer Mode. This field selects which rising PCLK edges can increment Timer's Prescale Counter (PC), or clear PC and increment Timer Counter (TC).	00
		0x0	Timer Mode: every rising PCLK edge	
		0x1	Counter Mode: TC is incremented on rising edges on the CAP input selected by bits 3:2.	
		0x2	Counter Mode: TC is incremented on falling edges on the CAP input selected by bits 3:2.	
		0x3	Counter Mode: TC is incremented on both edges on the CAP input selected by bits 3:2.	
3:2	CIS		Count Input Select. In counter mode (when bits 1:0 in this register are not 00), these bits select which CAP pin is sampled for clocking. **Note:** If Counter mode is selected in the CTCR register, bits 2:0 in the Capture Control Register (CCR) must be programmed as 000.	00
		0x0	CT16Bn_CAP0	
		0x1	CT16Bn_CAP1	
		0x2	Reserved.	
		0x0	Reserved.	
4	ENCC		Setting this bit to one enables clearing of the timer and the prescaler when the capture-edge event specified in bits 7:5 occurs.	0

All information provided in this document is subject to legal disclaimers. © NXP B.V. 2012. All rights reserved.

Table 308. Count Control Register (TMR16B0CTCR - address 0x4000 C070 and TMR16B1CTCR - address 0x4001 0070) bit description

Bit	Symbol	Value	Description	Reset value
7:5	SELCC		When bit 4 is one, these bits select which capture input edge will cause the timer and prescaler to be cleared. These bits have no effect when bit 4 is zero.	0
		0x0	Rising Edge of CAP0 clears the timer (if bit 4 is set).	
		0x1	Falling Edge of CAP0 clears the timer (if bit 4 is set).	
		0x2	Rising Edge of CAP1 clears the timer (if bit 4 is set).	
		0x3	Falling Edge of CAP1 clears the timer (if bit 4 is set).	
		0x4	Reserved.	
		0x5	Reserved.	
		0x6	Reserved.	
		0x7	Reserved.	
31:8	-	-	Reserved, user software should not write ones to reserved bits. The value read from a reserved bit is not defined.	-

19.7.12 PWM Control register (TMR16B0PWMC and TMR16B1PWMC)

The PWM Control Register is used to configure the match outputs as PWM outputs. Each match output can be independently set to perform either as PWM output or as match output whose function is controlled by the External Match Register (EMR).

For timer 0, three single-edge controlled PWM outputs can be selected on the CT16B0_MAT[2:0] outputs. For timer 1, two single-edged PWM outputs can be selected on the CT16B1_Mat[1:0] outputs. One additional match register determines the PWM cycle length. When a match occurs in any of the other match registers, the PWM output is set to HIGH. The timer is reset by the match register that is configured to set the PWM cycle length. When the timer is reset to zero, all currently HIGH match outputs configured as PWM outputs are cleared.

Table 309. PWM Control Register (TMR16B0PWMC - address 0x4000 C074 and TMR16B1PWMC- address 0x4001 0074) bit description

Bit	Symbol	Value	Description	Reset value
0	PWMEN0		PWM channel0 enable	0
		0	CT16Bn_MAT0 is controlled by EM0.	
		1	PWM mode is enabled for CT16Bn_MAT0.	
1	PWMEN1		PWM channel1 enable	0
		0	CT16Bn_MAT1 is controlled by EM1.	
		1	PWM mode is enabled for CT16Bn_MAT1.	
2	PWMEN2		PWM channel2 enable	0
		0	Match channel 2 or pin CT16B0_MAT2 is controlled by EM2. Match channel 2 is not pinned out on timer 1.	
		1	PWM mode is enabled for match channel 2 or pin CT16B0_MAT2.	

All information provided in this document is subject to legal disclaimers. © NXP B.V. 2012. All rights reserved.

Table 309. PWM Control Register (TMR16B0PWMC - address 0x4000 C074 and TMR16B1PWMC- address 0x4001 0074) bit description

Bit	Symbol	Value	Description	Reset value
3	PWMEN3		PWM channel3 enable **Note:** It is recommended to use match channel 3 to set the PWM cycle because it is not pinned out.	0
		0	Match channel 3 match channel 3 is controlled by EM3.	
		1	PWM mode is enabled for match channel 3match channel 3.	
31:4	-		Reserved, user software should not write ones to reserved bits. The value read from a reserved bit is not defined.	NA

19.7.13 Rules for single edge controlled PWM outputs

1. All single edge controlled PWM outputs go LOW at the beginning of each PWM cycle (timer is set to zero) unless their match value is equal to zero.
2. Each PWM output will go HIGH when its match value is reached. If no match occurs (i.e. the match value is greater than the PWM cycle length), the PWM output remains continuously LOW.
3. If a match value larger than the PWM cycle length is written to the match register, and the PWM signal is HIGH already, then the PWM signal will be cleared on the next start of the next PWM cycle.
4. If a match register contains the same value as the timer reset value (the PWM cycle length), then the PWM output will be reset to LOW on the next clock tick. Therefore, the PWM output will always consist of a one clock tick wide positive pulse with a period determined by the PWM cycle length (i.e. the timer reload value).
5. If a match register is set to zero, then the PWM output will go to HIGH the first time the timer goes back to zero and will stay HIGH continuously.

Note: When the match outputs are selected to serve as PWM outputs, the timer reset (MRnR) and timer stop (MRnS) bits in the Match Control Register MCR must be set to 0 except for the match register setting the PWM cycle length. For this register, set the MRnR bit to 1 to enable the timer reset when the timer value matches the value of the corresponding match register.

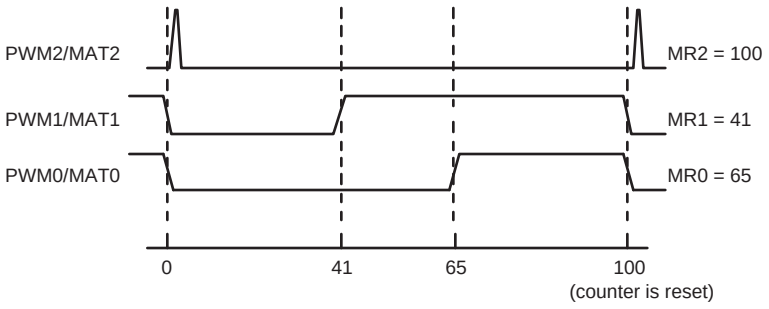

Fig 72. Sample PWM waveforms with a PWM cycle length of 100 (selected by MR3) and MAT3:0 enabled as PWM outputs by the PWCON register.

All information provided in this document is subject to legal disclaimers.

© NXP B.V. 2012. All rights reserved.

19.8 Example timer operation

Figure 73 shows a timer configured to reset the count and generate an interrupt on match. The prescaler is set to 2 and the match register set to 6. At the end of the timer cycle where the match occurs, the timer count is reset. This gives a full length cycle to the match value. The interrupt indicating that a match occurred is generated in the next clock after the timer reached the match value.

Figure 74 shows a timer configured to stop and generate an interrupt on match. The prescaler is again set to 2 and the match register set to 6. In the next clock after the timer reaches the match value, the timer enable bit in TCR is cleared, and the interrupt indicating that a match occurred is generated.

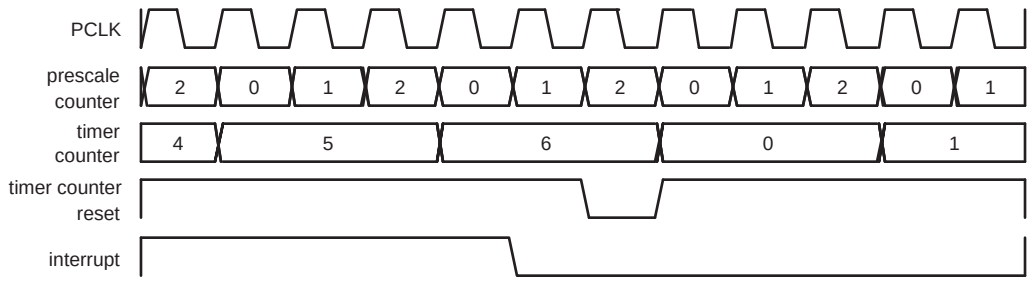

Fig 73. A timer cycle in which PR=2, MRx=6, and both interrupt and reset on match are enabled

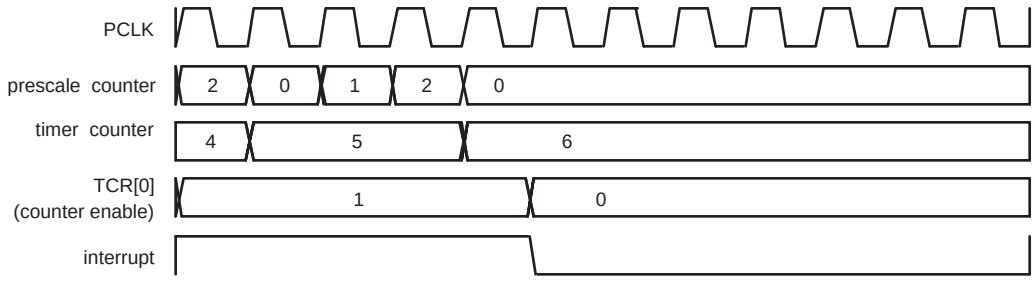

Fig 74. A timer cycle in which PR=2, MRx=6, and both interrupt and stop on match are enabled

19.9 Architecture

The block diagram for counter/timer0 and counter/timer1 is shown in Figure 75.

All information provided in this document is subject to legal disclaimers.

© NXP B.V. 2012. All rights reserved.

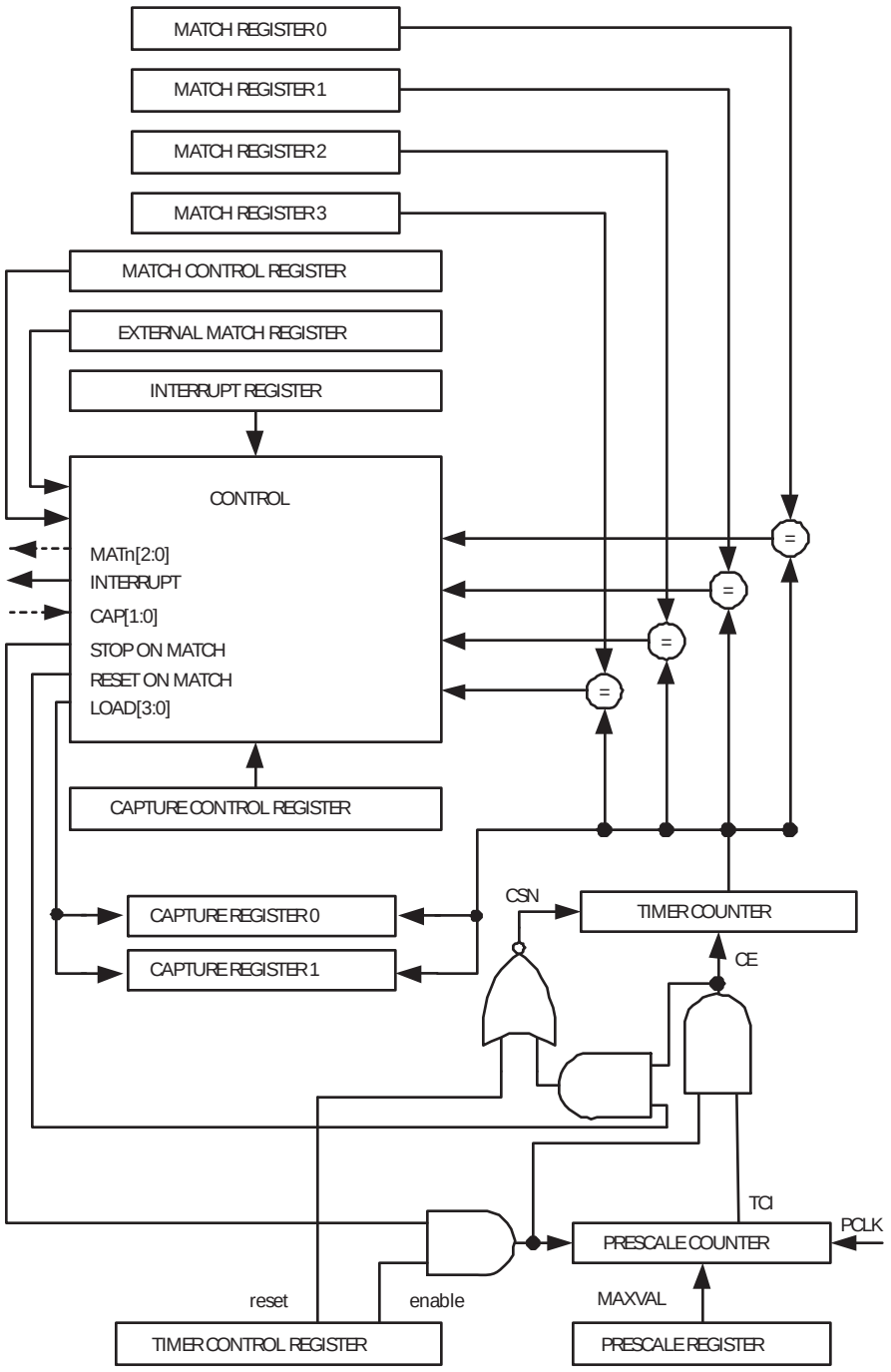

Fig 75. 16-bit counter/timer block diagram

All information provided in this document is subject to legal disclaimers.

© NXP B.V. 2012. All rights reserved.

20.1 How to read this chapter

The 32-bit timer blocks are identical for all LPC111x, LPC11D14, and LPC11Cxx parts.

20.2 Basic configuration

The CT32B0/1 are configured using the following registers:

1. Pins: The CT32B0/1 pins must be configured in the IOCONFIG register block (Section 7.4).
2. Power and peripheral clock: In the SYSAHBCLKCTRL register, set bit 9 and bit 10 (Table 21). The peripheral clock (PCLK) is provided by the system clock (see Table 20).

20.3 Features

- Two 32-bit counter/timers with a programmable 32-bit prescaler.
- Counter or Timer operation.
- One 32-bit capture channel that can take a snapshot of the timer value when an input signal transitions. A capture event may also optionally generate an interrupt.
- Four 32-bit match registers that allow:
  - Continuous operation with optional interrupt generation on match.
  - Stop timer on match with optional interrupt generation.
  - Reset timer on match with optional interrupt generation.
- Four external outputs corresponding to match registers with the following capabilities:
  - Set LOW on match.
  - Set HIGH on match.
  - Toggle on match.
  - Do nothing on match.
- For each timer, up to four match registers can be configured as PWM allowing to use up to three match outputs as single edge controlled PWM outputs.

20.4 Applications

- Interval timer for counting internal events
- Pulse Width Demodulator via capture input
- Free running timer
- Pulse Width Modulator via match outputs

All information provided in this document is subject to legal disclaimers.

© NXP B.V. 2012. All rights reserved.

20.5 Description

Each Counter/timer is designed to count cycles of the peripheral clock (PCLK) or an externally supplied clock and can optionally generate interrupts or perform other actions at specified timer values based on four match registers. The peripheral clock is provided by the system clock (see Figure 8). Each counter/timer also includes one capture input to trap the timer value when an input signal transitions, optionally generating an interrupt.

In PWM mode, three match registers can be used to provide a single-edge controlled PWM output on the match output pins. One match register is used to control the PWM cycle length.

Remark: 32-bit counter/timer0 (CT32B0) and 32-bit counter/timer1 (CT32B1) are functionally identical except for the peripheral base address.

20.6 Pin description

Table 310 gives a brief summary of each of the counter/timer related pins.

Table 310. Counter/timer pin description

Pin	Type	Description
CT32B0_CAP0 CT32B1_CAP0	Input	Capture Signals: A transition on a capture pin can be configured to load one of the Capture Registers with the value in the Timer Counter and optionally generate an interrupt. The counter/timer block can select a capture signal as a clock source instead of the PCLK derived clock. For more details see Section 20.7.11 “Count Control Register (TMR32B0CTCR and TMR32B1TCR)” on page 363.
CT32B0_MAT[3:0] CT32B1_MAT[3:0]	Output	External Match Output of CT32B0/1: When a match register TMR32B0/1MR3:0 equals the timer counter (TC), this output can either toggle, go LOW, go HIGH, or do nothing. The External Match Register (EMR) and the PWM Control register (PWMCON) control the functionality of this output.

20.7 Register description

32-bit counter/timer0 contains the registers shown in Table 311 and 32-bit counter/timer1 contains the registers shown in Table 312. More detailed descriptions follow.

Table 311. Register overview: 32-bit counter/timer 0 CT32B0 (base address 0x4001 4000)

Name	Access	Address offset	Description	Reset value[1]
TMR32B0IR	R/W	0x000	Interrupt Register (IR). The IR can be written to clear interrupts. The IR can be read to identify which of five possible interrupt sources are pending.	0
TMR32B0TCR	R/W	0x004	Timer Control Register (TCR). The TCR is used to control the Timer Counter functions. The Timer Counter can be disabled or reset through the TCR.	0
TMR32B0TC	R/W	0x008	Timer Counter (TC). The 32-bit TC is incremented every PR+1 cycles of PCLK. The TC is controlled through the TCR.	0
TMR32B0PR	R/W	0x00C	Prescale Register (PR). When the Prescale Counter (below) is equal to this value, the next clock increments the TC and clears the PC.	0

All information provided in this document is subject to legal disclaimers.
© NXP B.V. 2012. All rights reserved.

Table 311. Register overview: 32-bit counter/timer 0 CT32B0 (base address 0x4001 4000) *…continued*

Name	Access	Address offset	Description	Reset value[1]
TMR32B0PC	R/W	0x010	Prescale Counter (PC). The 32-bit PC is a counter which is incremented to the value stored in PR. When the value in PR is reached, the TC is incremented and the PC is cleared. The PC is observable and controllable through the bus interface.	0
TMR32B0MCR	R/W	0x014	Match Control Register (MCR). The MCR is used to control if an interrupt is generated and if the TC is reset when a Match occurs.	0
TMR32B0MR0	R/W	0x018	Match Register 0 (MR0). MR0 can be enabled through the MCR to reset the TC, stop both the TC and PC, and/or generate an interrupt every time MR0 matches the TC.	0
TMR32B0MR1	R/W	0x01C	Match Register 1 (MR1). See MR0 description.	0
TMR32B0MR2	R/W	0x020	Match Register 2 (MR2). See MR0 description.	0
TMR32B0MR3	R/W	0x024	Match Register 3 (MR3). See MR0 description.	0
TMR32B0CCR	R/W	0x028	Capture Control Register (CCR). The CCR controls which edges of the capture inputs are used to load the Capture Registers and whether or not an interrupt is generated when a capture takes place.	0
TMR32B0CR0	RO	0x02C	Capture Register 0 (CR0). CR0 is loaded with the value of TC when there is an event on the CT32B0_CAP0 input.	0
TMR32B0EMR	R/W	0x03C	External Match Register (EMR). The EMR controls the match function and the external match pins CT32B0_MAT[3:0].	0
-	-	0x040 - 0x06C	reserved	-
TMR32B0CTCR	R/W	0x070	Count Control Register (CTCR). The CTCR selects between Timer and Counter mode, and in Counter mode selects the signal and edge(s) for counting.	0
TMR32B0PWMC	R/W	0x074	PWM Control Register (PWMCON). The PWMCON enables PWM mode for the external match pins CT32B0_MAT[3:0].	0

[1] Reset value reflects the data stored in used bits only. It does not include reserved bits content.

Table 312. Register overview: 32-bit counter/timer 1 CT32B1 (base address 0x4001 8000)

Name	Access	Address offset	Description	Reset value[1]
TMR32B1IR	R/W	0x000	Interrupt Register (IR). The IR can be written to clear interrupts. The IR can be read to identify which of five possible interrupt sources are pending.	0
TMR32B1TCR	R/W	0x004	Timer Control Register (TCR). The TCR is used to control the Timer Counter functions. The Timer Counter can be disabled or reset through the TCR.	0
TMR32B1TC	R/W	0x008	Timer Counter (TC). The 32-bit TC is incremented every PR+1 cycles of PCLK. The TC is controlled through the TCR.	0
TMR32B1PR	R/W	0x00C	Prescale Register (PR). When the Prescale Counter (below) is equal to this value, the next clock increments the TC and clears the PC.	0
TMR32B1PC	R/W	0x010	Prescale Counter (PC). The 32-bit PC is a counter which is incremented to the value stored in PR. When the value in PR is reached, the TC is incremented and the PC is cleared. The PC is observable and controllable through the bus interface.	0

All information provided in this document is subject to legal disclaimers. © NXP B.V. 2012. All rights reserved.

Table 312. Register overview: 32-bit counter/timer 1 CT32B1 (base address 0x4001 8000) *…continued*

Name	Access	Address offset	Description	Reset value[1]
TMR32B1MCR	R/W	0x014	Match Control Register (MCR). The MCR is used to control if an interrupt is generated and if the TC is reset when a Match occurs.	0
TMR32B1MR0	R/W	0x018	Match Register 0 (MR0). MR0 can be enabled through the MCR to reset the TC, stop both the TC and PC, and/or generate an interrupt every time MR0 matches the TC.	0
TMR32B1MR1	R/W	0x01C	Match Register 1 (MR1). See MR0 description.	0
TMR32B1MR2	R/W	0x020	Match Register 2 (MR2). See MR0 description.	0
TMR32B1MR3	R/W	0x024	Match Register 3 (MR3). See MR0 description.	0
TMR32B1CCR	R/W	0x028	Capture Control Register (CCR). The CCR controls which edges of the capture inputs are used to load the Capture Registers and whether or not an interrupt is generated when a capture takes place.	0
TMR32B1CR0	RO	0x02C	Capture Register 0 (CR0). CR0 is loaded with the value of TC when there is an event on the CT32B1_CAP0 input.	0
TMR32B1EMR	R/W	0x03C	External Match Register (EMR). The EMR controls the match function and the external match pins CT32B1_MAT[3:0].	0
-	-	0x040 - 0x06C	reserved	-
TMR32B1CTCR	R/W	0x070	Count Control Register (CTCR). The CTCR selects between Timer and Counter mode, and in Counter mode selects the signal and edge(s) for counting.	0
TMR32B1PWMC	R/W	0x074	PWM Control Register (PWMCON). The PWMCON enables PWM mode for the external match pins CT32B1_MAT[3:0].	0

[1] Reset value reflects the data stored in used bits only. It does not include reserved bits content.

20.7.1 Interrupt Register (TMR32B0IR and TMR32B1IR)

The Interrupt Register consists of four bits for the match interrupts and one bit for the capture interrupts. If an interrupt is generated then the corresponding bit in the IR will be HIGH. Otherwise, the bit will be LOW. Writing a logic one to the corresponding IR bit will reset the interrupt. Writing a zero has no effect.

Table 313: Interrupt Register (TMR32B0IR - address 0x4001 4000 and TMR32B1IR - address 0x4001 8000) bit description

Bit	Symbol	Description	Reset value
0	MR0 Interrupt	Interrupt flag for match channel 0.	0
1	MR1 Interrupt	Interrupt flag for match channel 1.	0
2	MR2 Interrupt	Interrupt flag for match channel 2.	0
3	MR3 Interrupt	Interrupt flag for match channel 3.	0
4	CR0 Interrupt	Interrupt flag for capture channel 0 event.	0
31:5	-	Reserved	-

20.7.2 Timer Control Register (TMR32B0TCR and TMR32B1TCR)

The Timer Control Register (TCR) is used to control the operation of the counter/timer.

All information provided in this document is subject to legal disclaimers. © NXP B.V. 2012. All rights reserved.

Table 314: Timer Control Register (TMR32B0TCR - address 0x4001 4004 and TMR32B1TCR - address 0x4001 8004) bit description

Bit	Symbol	Description	Reset value
0	CEn	When one, the Timer Counter and Prescale Counter are enabled for counting. When zero, the counters are disabled.	0
1	CRst	When one, the Timer Counter and the Prescale Counter are synchronously reset on the next positive edge of PCLK. The counters remain reset until TCR[1] is returned to zero.	0
31:2	-	Reserved, user software should not write ones to reserved bits. The value read from a reserved bit is not defined.	NA

20.7.3 Timer Counter (TMR32B0TC - address 0x4001 4008 and TMR32B1TC - address 0x4001 8008)

The 32-bit Timer Counter is incremented when the Prescale Counter reaches its terminal count. Unless it is reset before reaching its upper limit, the TC will count up through the value 0xFFFF FFFF and then wrap back to the value 0x0000 0000. This event does not cause an interrupt, but a Match register can be used to detect an overflow if needed.

Table 315: Timer counter registers (TMR32B0TC, address 0x4001 4008 and TMR32B1TC 0x4001 8008) bit description

Bit	Symbol	Description	Reset value
31:0	TC	Timer counter value.	0

20.7.4 Prescale Register (TMR32B0PR - address 0x4001 400C and TMR32B1PR - address 0x4001 800C)

The 32-bit Prescale Register specifies the maximum value for the Prescale Counter.

Table 316: Prescale registers (TMR32B0PR, address 0x4001 400C and TMR32B1PR 0x4001 800C) bit description

Bit	Symbol	Description	Reset value
31:0	PR	Prescale value.	0

20.7.5 Prescale Counter Register (TMR32B0PC - address 0x4001 4010 and TMR32B1PC - address 0x4001 8010)

The 32-bit Prescale Counter controls division of PCLK by some constant value before it is applied to the Timer Counter. This allows control of the relationship between the resolution of the timer and the maximum time before the timer overflows. The Prescale Counter is incremented on every PCLK. When it reaches the value stored in the Prescale Register, the Timer Counter is incremented, and the Prescale Counter is reset on the next PCLK. This causes the TC to increment on every PCLK when PR = 0, every 2 PCLKs when PR = 1, etc.

All information provided in this document is subject to legal disclaimers.
© NXP B.V. 2012. All rights reserved.

Table 317: Prescale counter registers (TMR32B0PC, address 0x4001 4010 and TMR32B1PC 0x4001 8010) bit description

Bit	Symbol	Description	Reset value
31:0	PC	Prescale counter value.	0

20.7.6 Match Control Register (TMR32B0MCR and TMR32B1MCR)

The Match Control Register is used to control what operations are performed when one of the Match Registers matches the Timer Counter. The function of each of the bits is shown in Table 318.

Table 318: Match Control Register (TMR32B0MCR - address 0x4001 4014 and TMR32B1MCR - address 0x4001 8014) bit description

Bit	Symbol	Value	Description	Reset value
0	MR0I		Interrupt on MR0: an interrupt is generated when MR0 matches the value in the TC.	0
		1	Enabled	
		0	Disabled	
1	MR0R		Reset on MR0: the TC will be reset if MR0 matches it.	0
		1	Enabled	
		0	Disabled	
2	MR0S		Stop on MR0: the TC and PC will be stopped and TCR[0] will be set to 0 if MR0 matches the TC.	0
		1	Enabled	
		0	Disabled	
3	MR1I		Interrupt on MR1: an interrupt is generated when MR1 matches the value in the TC.	0
		1	Enabled	
		0	Disabled	
4	MR1R		Reset on MR1: the TC will be reset if MR1 matches it.	0
		1	Enabled	
		0	Disabled	
5	MR1S		Stop on MR1: the TC and PC will be stopped and TCR[0] will be set to 0 if MR1 matches the TC.	0
		1	Enabled	
		0	Disabled	
6	MR2I		Interrupt on MR2: an interrupt is generated when MR2 matches the value in the TC.	0
		1	Enabled	
		0	Disabled	
7	MR2R		Reset on MR2: the TC will be reset if MR2 matches it.	0
		1	Enabled	
		0	Disabled	
8	MR2S		Stop on MR2: the TC and PC will be stopped and TCR[0] will be set to 0 if MR2 matches the TC.	0
		1	Enabled	
		0	Disabled	

All information provided in this document is subject to legal disclaimers.
© NXP B.V. 2012. All rights reserved.

Table 318: Match Control Register (TMR32B0MCR - address 0x4001 4014 and TMR32B1MCR - address 0x4001 8014) bit description

Bit	Symbol	Value	Description	Reset value
9	MR3I		Interrupt on MR3: an interrupt is generated when MR3 matches the value in the TC.	0
		1	Enabled	
		0	Disabled	
10	MR3R		Reset on MR3: the TC will be reset if MR3 matches it.	0
		1	Enabled	
		0	Disabled	
11	MR3S		Stop on MR3: the TC and PC will be stopped and TCR[0] will be set to 0 if MR3 matches the TC.	0
		1	Enabled	
		0	Disabled	
31:12	-		Reserved, user software should not write ones to reserved bits. The value read from a reserved bit is not defined.	NA

20.7.7 Match Registers (TMR32B0MR0/1/2/3 - addresses 0x4001 4018/1C/20/24 and TMR32B1MR0/1/2/3 addresses 0x4001 8018/1C/20/24)

The Match register values are continuously compared to the Timer Counter value. When the two values are equal, actions can be triggered automatically. The action possibilities are to generate an interrupt, reset the Timer Counter, or stop the timer. Actions are controlled by the settings in the MCR register.

Table 319: Match registers (TMR32B0MR0 to 3, addresses 0x4001 4018 to 24 and TMR32B1MR0 to 3, addresses 0x4001 8018 to 24) bit description

Bit	Symbol	Description	Reset value
31:0	MATCH	Timer counter match value.	0

20.7.8 Capture Control Register (TMR32B0CCR and TMR32B1CCR)

The Capture Control Register is used to control whether the Capture Register is loaded with the value in the Timer Counter when the capture event occurs, and whether an interrupt is generated by the capture event. Setting both the rising and falling bits at the same time is a valid configuration, resulting in a capture event for both edges. In the description below, “n” represents the Timer number, 0 or 1.

Table 320: Capture Control Register (TMR32B0CCR - address 0x4001 4028 and TMR32B1CCR - address 0x4001 8028) bit description

Bit	Symbol	Value	Description	Reset value
0	CAP0RE		Capture on CT32Bn_CAP0 rising edge: a sequence of 0 then 1 on CT32Bn_CAP0 will cause CR0 to be loaded with the contents of TC.	0
		1	Enabled	
		0	Disabled	

All information provided in this document is subject to legal disclaimers.
© NXP B.V. 2012. All rights reserved.

Table 320: Capture Control Register (TMR32B0CCR - address 0x4001 4028 and TMR32B1CCR - address 0x4001 8028) bit description

Bit	Symbol	Value	Description	Reset value
1	CAP0FE		Capture on CT32Bn_CAP0 falling edge: a sequence of 1 then 0 on CT32Bn_CAP0 will cause CR0 to be loaded with the contents of TC.	0
		1	Enabled	
		0	Disabled	
2	CAP0I		Interrupt on CT32Bn_CAP0 event: a CR0 load due to a CT32Bn_CAP0 event will generate an interrupt.	0
		1	Enabled	
		0	Disabled	
31:3	-		Reserved, user software should not write ones to reserved bits. The value read from a reserved bit is not defined.	NA

20.7.9 Capture Register (TMR32B0CR0 - address 0x4001 402C and TMR32B1CR0 - address 0x4001 802C)

Each Capture register is associated with a device pin and may be loaded with the Timer Counter value when a specified event occurs on that pin. The settings in the Capture Control Register register determine whether the capture function is enabled, and whether a capture event happens on the rising edge of the associated pin, the falling edge, or on both edges.

Table 321: Capture registers (TMR32B0CR0, addresses 0x4001 402C and TMR32B1CR0, addresses 0x4001 802C) bit description

Bit	Symbol	Description	Reset value
31:0	CAP	Timer counter capture value.	0

20.7.10 External Match Register (TMR32B0EMR and TMR32B1EMR)

The External Match Register provides both control and status of the external match pins CAP32Bn_MAT[3:0].

If the match outputs are configured as PWM output, the function of the external match registers is determined by the PWM rules (Section 20.7.13 “Rules for single edge controlled PWM outputs” on page 365).

All information provided in this document is subject to legal disclaimers.
© NXP B.V. 2012. All rights reserved.

Table 322: External Match Register (TMR32B0EMR - address 0x4001 403C and TMR32B1EMR - address0x4001 803C) bit description

Bit	Symbol	Value	Description	Reset value
0	EM0		External Match 0. This bit reflects the state of output CT32Bn_MAT0, whether or not this output is connected to its pin. When a match occurs between the TC and MR0, this bit can either toggle, go LOW, go HIGH, or do nothing. Bits EMR[5:4] control the functionality of this output. This bit is driven to the CT32B0_MAT0/CT16B1_MAT0 pins if the match function is selected in the IOCON registers (0 = LOW, 1 = HIGH).	0
1	EM1		External Match 1. This bit reflects the state of output CT32Bn_MAT1, whether or not this output is connected to its pin. When a match occurs between the TC and MR1, this bit can either toggle, go LOW, go HIGH, or do nothing. Bits EMR[7:6] control the functionality of this output. This bit is driven to the CT32B0_MAT1/CT16B1_MAT1 pins if the match function is selected in the IOCON registers (0 = LOW, 1 = HIGH).	0
2	EM2		External Match 2. This bit reflects the state of output CT32Bn_MAT2, whether or not this output is connected to its pin. When a match occurs between the TC and MR2, this bit can either toggle, go LOW, go HIGH, or do nothing. Bits EMR[9:8] control the functionality of this output. This bit is driven to the CT32B0_MAT2/CT16B1_MAT2 pins if the match function is selected in the IOCON registers (0 = LOW, 1 = HIGH).	0
3	EM3		External Match 3. This bit reflects the state of output CT32Bn_MAT3, whether or not this output is connected to its pin. When a match occurs between the TC and MR3, this bit can either toggle, go LOW, go HIGH, or do nothing. Bits EMR[11:10] control the functionality of this output. This bit is driven to the CT32B0_MAT3/CT16B1_MAT3 pins if the match function is selected in the IOCON registers (0 = LOW, 1 = HIGH).	0
5:4	EMC0		External Match Control 0. Determines the functionality of External Match 0.	00
		0x0	Do Nothing.	
		0x1	Clear the corresponding External Match bit/output to 0 (CT32Bn_MATm pin is LOW if pinned out).	
		0x2	Set the corresponding External Match bit/output to 1 (CT32Bn_MATm pin is HIGH if pinned out).	
		0x3	Toggle the corresponding External Match bit/output.	
7:6	EMC1		External Match Control 1. Determines the functionality of External Match 1.	00
		0x0	Do Nothing.	
		0x1	Clear the corresponding External Match bit/output to 0 (CT32Bn_MATm pin is LOW if pinned out).	
		0x2	Set the corresponding External Match bit/output to 1 (CT32Bn_MATm pin is HIGH if pinned out).	
		0x3	Toggle the corresponding External Match bit/output.	
9:8	EMC2		External Match Control 2. Determines the functionality of External Match 2.	00
		0x0	Do Nothing.	
		0x1	Clear the corresponding External Match bit/output to 0 (CT32Bn_MATm pin is LOW if pinned out).	
		0x2	Set the corresponding External Match bit/output to 1 (CT32Bn_MATm pin is HIGH if pinned out).	
		0x3	Toggle the corresponding External Match bit/output.	

All information provided in this document is subject to legal disclaimers.
© NXP B.V. 2012. All rights reserved.

Table 322: External Match Register (TMR32B0EMR - address 0x4001 403C and TMR32B1EMR - address0x4001 803C) bit description

Bit	Symbol	Value	Description	Reset value
11:10	EMC3		External Match Control 3. Determines the functionality of External Match 3.	00
		0x0	Do Nothing.	
		0x1	Clear the corresponding External Match bit/output to 0 (CT32Bn_MATm pin is LOW if pinned out).	
		0x2	Set the corresponding External Match bit/output to 1 (CT32Bn_MATm pin is HIGH if pinned out).	
		0x3	Toggle the corresponding External Match bit/output.	
31:12	-		Reserved, user software should not write ones to reserved bits. The value read from a reserved bit is not defined.	NA

Table 323. External match control

EMR[11:10], EMR[9:8], EMR[7:6], or EMR[5:4]	Function
00	Do Nothing.
01	Clear the corresponding External Match bit/output to 0 (CT32Bn_MATm pin is LOW if pinned out).
10	Set the corresponding External Match bit/output to 1 (CT32Bn_MATm pin is HIGH if pinned out).
11	Toggle the corresponding External Match bit/output.

20.7.11 Count Control Register (TMR32B0CTCR and TMR32B1TCR)

The Count Control Register (CTCR) is used to select between Timer and Counter mode, and in Counter mode to select the pin and edge(s) for counting.

When Counter Mode is chosen as a mode of operation, the CAP input (selected by the CTCR bits 3:2) is sampled on every rising edge of the PCLK clock. After comparing two consecutive samples of this CAP input, one of the following four events is recognized: rising edge, falling edge, either of edges or no changes in the level of the selected CAP input. Only if the identified event occurs, and the event corresponds to the one selected by bits 1:0 in the CTCR register, will the Timer Counter register be incremented.

Effective processing of the externally supplied clock to the counter has some limitations. Since two successive rising edges of the PCLK clock are used to identify only one edge on the CAP selected input, the frequency of the CAP input can not exceed one half of the PCLK clock. Consequently, duration of the HIGH/LOW levels on the same CAP input in this case can not be shorter than $1/(2 \times PCLK)$.

All information provided in this document is subject to legal disclaimers.
© NXP B.V. 2012. All rights reserved.

Table 324: Count Control Register (TMR32B0CTCR - address 0x4001 4070 and TMR32B1TCR - address 0x4001 8070) bit description

Bit	Symbol	Value	Description	Reset value
1:0	CTM		Counter/Timer Mode. This field selects which rising PCLK edges can increment Timer's Prescale Counter (PC), or clear PC and increment Timer Counter (TC). Timer Mode: every rising PCLK edge	00
		0x0	Timer Mode: every rising PCLK edge	
		0x1	Counter Mode: TC is incremented on rising edges on the CAP input selected by bits 3:2.	
		0x2	Counter Mode: TC is incremented on falling edges on the CAP input selected by bits 3:2.	
		0x3	Counter Mode: TC is incremented on both edges on the CAP input selected by bits 3:2.	
3:2	CIS		Count Input Select. When bits 1:0 in this register are not 00, these bits select which CAP pin is sampled for clocking:	00
		0x0	CT32Bn_CAP0	
		0x1	Reserved	
		0x2	Reserved	
		0x3	Reserved **Note:** If Counter mode is selected in the TnCTCR, the 3 bits for that input in the Capture Control Register (TnCCR) must be programmed as 000.	
31:4	-	-	Reserved, user software should not write ones to reserved bits. The value read from a reserved bit is not defined.	NA

20.7.12 PWM Control Register (TMR32B0PWMC and TMR32B1PWMC)

The PWM Control Register is used to configure the match outputs as PWM outputs. Each match output can be independently set to perform either as PWM output or as match output whose function is controlled by the External Match Register (EMR).

For each timer, a maximum of three-single edge controlled PWM outputs can be selected on the MATn[2:0] outputs. One additional match register determines the PWM cycle length. When a match occurs in any of the other match registers, the PWM output is set to HIGH. The timer is reset by the match register that is configured to set the PWM cycle length. When the timer is reset to zero, all currently HIGH match outputs configured as PWM outputs are cleared.

Table 325: PWM Control Register (TMR32B0PWMC - 0x4001 4074 and TMR32B1PWMC - 0x4001 8074) bit description

Bit	Symbol	Value	Description	Reset value
0	PWMEN0		PWM channel 0 enable	0
		0	CT32Bn_MAT0 is controlled by EM0.	
		1	PWM mode is enabled for CT32Bn_MAT0.	

All information provided in this document is subject to legal disclaimers.
© NXP B.V. 2012. All rights reserved.

Table 325: PWM Control Register (TMR32B0PWMC - 0x4001 4074 and TMR32B1PWMC - 0x4001 8074) bit description

Bit	Symbol	Value	Description	Reset value
1	PWMEN1		PWM channel 1 enable	0
		0	CT32Bn_MAT1 is controlled by EM1.	
		1	PWM mode is enabled for CT32Bn_MAT1.	
2	PWMEN2		PWM channel 2 enable	0
		0	CT32Bn_MAT2 is controlled by EM2.	
		1	PWM mode is enabled for CT32Bn_MAT2.	
3	PWMEN3		PWM channel 3 enable **Note:** It is recommended to use match channel 3 to set the PWM cycle.	0
		0	CT32Bn_MAT3 is controlled by EM3.	
		1	PWM mode is enabled for CT32Bn_MAT3.	
31:4	-		Reserved, user software should not write ones to reserved bits. The value read from a reserved bit is not defined.	NA

20.7.13 Rules for single edge controlled PWM outputs

1. All single edge controlled PWM outputs go LOW at the beginning of each PWM cycle (timer is set to zero) unless their match value is equal to zero.
2. Each PWM output will go HIGH when its match value is reached. If no match occurs (i.e. the match value is greater than the PWM cycle length), the PWM output remains continuously LOW.
3. If a match value larger than the PWM cycle length is written to the match register, and the PWM signal is HIGH already, then the PWM signal will be cleared with the start of the next PWM cycle.
4. If a match register contains the same value as the timer reset value (the PWM cycle length), then the PWM output will be reset to LOW on the next clock tick after the timer reaches the match value. Therefore, the PWM output will always consist of a one clock tick wide positive pulse with a period determined by the PWM cycle length (i.e. the timer reload value).
5. If a match register is set to zero, then the PWM output will go to HIGH the first time the timer goes back to zero and will stay HIGH continuously.

Note: When the match outputs are selected to function as PWM outputs, the timer reset (MRnR) and timer stop (MRnS) bits in the Match Control Register MCR must be set to 0 except for the match register setting the PWM cycle length. For this register, set the MRnR bit to 1 to enable the timer reset when the timer value matches the value of the corresponding match register.

All information provided in this document is subject to legal disclaimers.
© NXP B.V. 2012. All rights reserved.

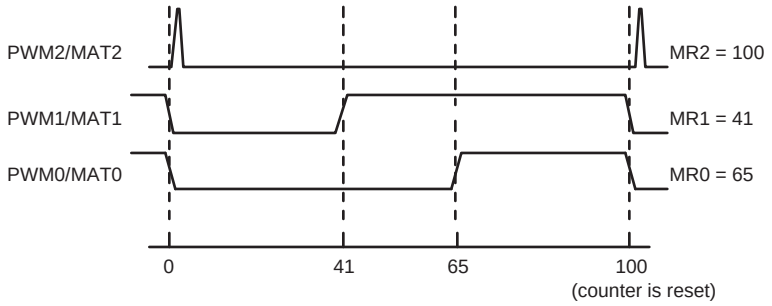

Fig 76. Sample PWM waveforms with a PWM cycle length of 100 (selected by MR3) and MAT3:0 enabled as PWM outputs by the PWCON register.

20.8 Example timer operation

Figure 77 shows a timer configured to reset the count and generate an interrupt on match. The prescaler is set to 2 and the match register set to 6. At the end of the timer cycle where the match occurs, the timer count is reset. This gives a full length cycle to the match value. The interrupt indicating that a match occurred is generated in the next clock after the timer reached the match value.

Figure 78 shows a timer configured to stop and generate an interrupt on match. The prescaler is again set to 2 and the match register set to 6. In the next clock after the timer reaches the match value, the timer enable bit in TCR is cleared, and the interrupt indicating that a match occurred is generated.

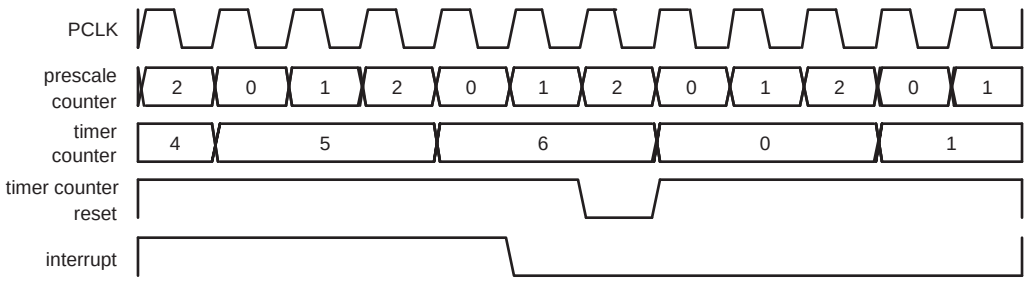

Fig 77. A timer cycle in which PR=2, MRx=6, and both interrupt and reset on match are enabled

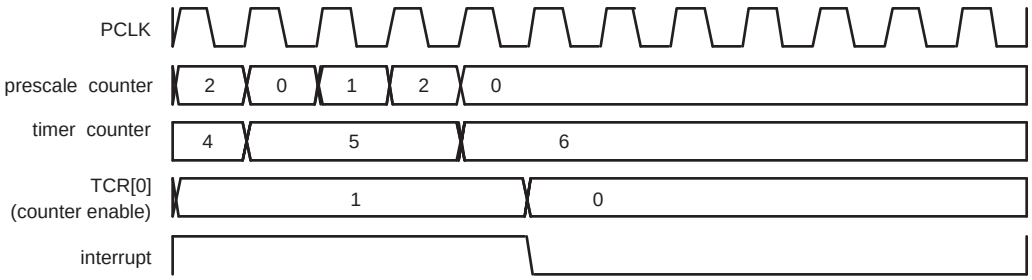

Fig 78. A timer cycle in which PR=2, MRx=6, and both interrupt and stop on match are enabled

All information provided in this document is subject to legal disclaimers.
© NXP B.V. 2012. All rights reserved.

20.9 Architecture

The block diagram for 32-bit counter/timer0 and 32-bit counter/timer1 is shown in Figure 79.

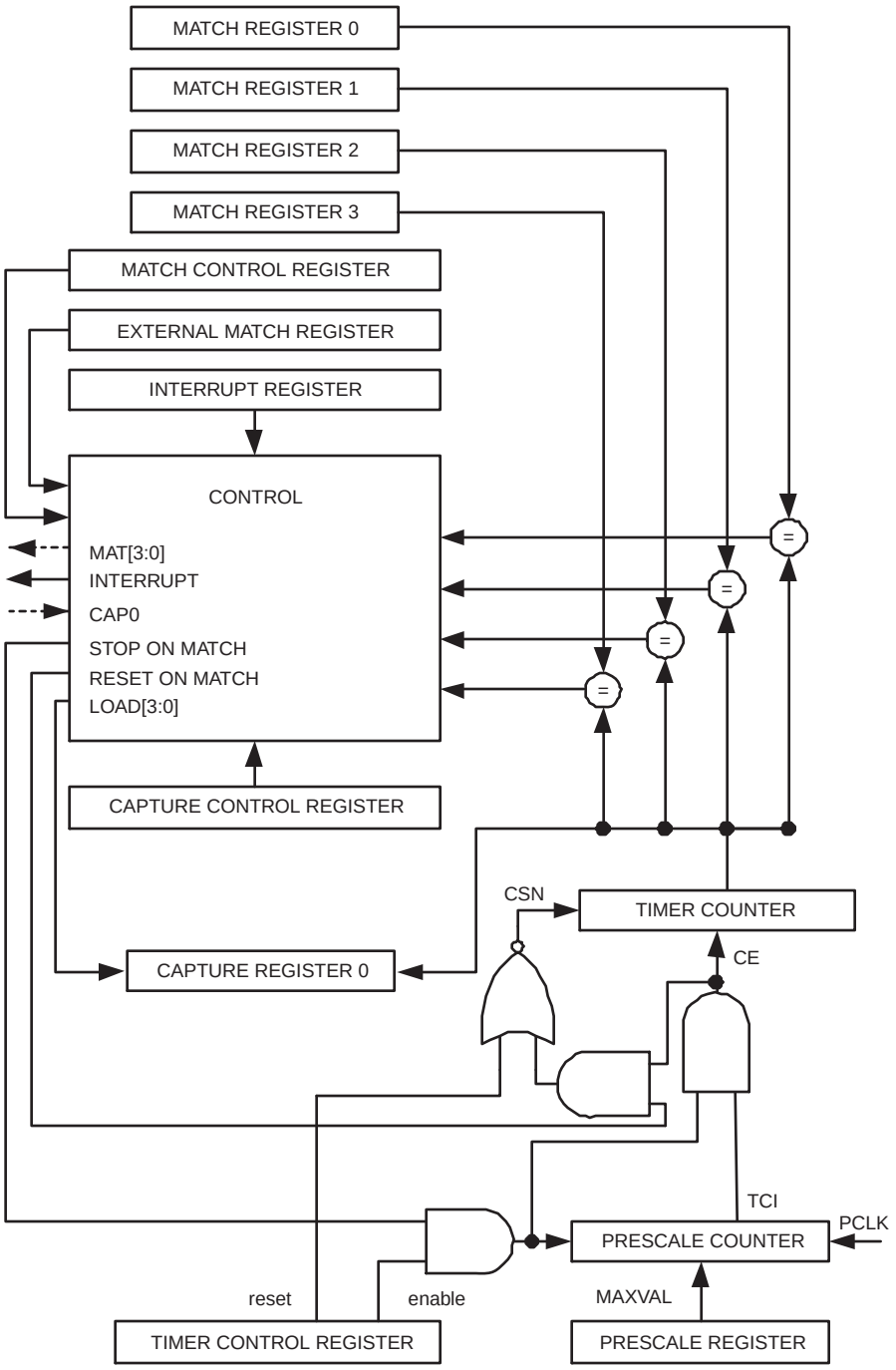

Fig 79. 32-bit counter/timer block diagram

All information provided in this document is subject to legal disclaimers.
© NXP B.V. 2012. All rights reserved.

21.1 How to read this chapter

The 32-bit timer blocks are identical for all LPC1100XL parts.

Compared to the timer block for the LPC1100/LPC1100L/LPC1100C series, the following features have been added:

- One additional capture input for each timer.
- Capture-clear function for easy pulse-width measurement (see Section 21.7.11).

21.2 Basic configuration

The CT32B0/1 are configured using the following registers:

1. Pins: The CT32B0/1 pins must be configured in the IOCONFIG register block (Section 7.4).
2. Power and peripheral clock: In the SYSAHBCLKCTRL register, set bit 9 and bit 10 (Table 21). The peripheral clock (PCLK) is provided by the system clock (see Table 20).

21.3 Features

- Two 32-bit counter/timers with a programmable 32-bit prescaler.
- Counter or Timer operation.
- The timer and prescaler may be configured to be cleared on a designated capture event. This feature permits easy pulse-width measurement by clearing the timer on the leading edge of an input pulse and capturing the timer value on the trailing edge.
- Two 32-bit capture channels that can take a snapshot of the timer value when an input signal transitions. A capture event may also optionally generate an interrupt.
- Four 32-bit match registers that allow:
  - Continuous operation with optional interrupt generation on match.
  - Stop timer on match with optional interrupt generation.
  - Reset timer on match with optional interrupt generation.
- Up to four external outputs corresponding to match registers with the following capabilities:
  - Set LOW on match.
  - Set HIGH on match.
  - Toggle on match.
  - Do nothing on match.
- For each timer, up to four match registers can be configured as PWM allowing to use up to three match outputs as single edge controlled PWM outputs.

All information provided in this document is subject to legal disclaimers.
© NXP B.V. 2012. All rights reserved.

21.4 Applications

- Interval timer for counting internal events
- Pulse Width Demodulator via capture input
- Free running timer
- Pulse Width Modulator via match outputs

21.5 Description

Each Counter/timer is designed to count cycles of the peripheral clock (PCLK) or an externally supplied clock and can optionally generate interrupts or perform other actions at specified timer values based on four match registers. The peripheral clock is provided by the system clock (see Figure 8). Each counter/timer also includes one capture input to trap the timer value when an input signal transitions, optionally generating an interrupt.

In PWM mode, three match registers can be used to provide a single-edge controlled PWM output on the match output pins. One match register is used to control the PWM cycle length.

Remark: 32-bit counter/timer0 (CT32B0) and 32-bit counter/timer1 (CT32B1) are functionally identical except for the peripheral base address.

21.6 Pin description

Table 326 gives a brief summary of each of the counter/timer related pins.

Table 326. Counter/timer pin description

Pin	Type	Description
CT32B0_CAP[1:0] CT32B1_CAP[1:0]	Input	Capture Signals: A transition on a capture pin can be configured to load one of the Capture Registers with the value in the Timer Counter and optionally generate an interrupt. The counter/timer block can select a capture signal as a clock source instead of the PCLK derived clock. For more details see Section 21.7.11 “Count Control Register (TMR32B0CTCR and TMR32B1TCR)” on page 378.
CT32B0_MAT[3:0] CT32B1_MAT[3:0]	Output	External Match Output of CT32B0/1: When a match register TMR32B0/1MR3:0 equals the timer counter (TC), this output can either toggle, go LOW, go HIGH, or do nothing. The External Match Register (EMR) and the PWM Control register (PWMCON) control the functionality of this output.

21.7 Register description

32-bit counter/timer0 contains the registers shown in Table 327 and 32-bit counter/timer1 contains the registers shown in Table 328. More detailed descriptions follow.

All information provided in this document is subject to legal disclaimers.
© NXP B.V. 2012. All rights reserved.

Table 327. Register overview: 32-bit counter/timer 0 CT32B0 (base address 0x4001 4000)

Name	Access	Address offset	Description	Reset value[1]
TMR32B0IR	R/W	0x000	Interrupt Register (IR). The IR can be written to clear interrupts. The IR can be read to identify which of five possible interrupt sources are pending.	0
TMR32B0TCR	R/W	0x004	Timer Control Register (TCR). The TCR is used to control the Timer Counter functions. The Timer Counter can be disabled or reset through the TCR.	0
TMR32B0TC	R/W	0x008	Timer Counter (TC). The 32-bit TC is incremented every PR+1 cycles of PCLK. The TC is controlled through the TCR.	0
TMR32B0PR	R/W	0x00C	Prescale Register (PR). When the Prescale Counter (below) is equal to this value, the next clock increments the TC and clears the PC.	0
TMR32B0PC	R/W	0x010	Prescale Counter (PC). The 32-bit PC is a counter which is incremented to the value stored in PR. When the value in PR is reached, the TC is incremented and the PC is cleared. The PC is observable and controllable through the bus interface.	0
TMR32B0MCR	R/W	0x014	Match Control Register (MCR). The MCR is used to control if an interrupt is generated and if the TC is reset when a Match occurs.	0
TMR32B0MR0	R/W	0x018	Match Register 0 (MR0). MR0 can be enabled through the MCR to reset the TC, stop both the TC and PC, and/or generate an interrupt every time MR0 matches the TC.	0
TMR32B0MR1	R/W	0x01C	Match Register 1 (MR1). See MR0 description.	0
TMR32B0MR2	R/W	0x020	Match Register 2 (MR2). See MR0 description.	0
TMR32B0MR3	R/W	0x024	Match Register 3 (MR3). See MR0 description.	0
TMR32B0CCR	R/W	0x028	Capture Control Register (CCR). The CCR controls which edges of the capture inputs are used to load the Capture Registers and whether or not an interrupt is generated when a capture takes place.	0
TMR32B0CR0	RO	0x02C	Capture Register 0 (CR0). CR0 is loaded with the value of TC when there is an event on the CT32B0_CAP0 input.	0
TMR32B0CR1	RO	0x030	Capture Register 1 (CR1). CR1 is loaded with the value of TC when there is an event on the CT32B0_CAP1 input.	0
-	-	0x034 - 0x038	Reserved	-
TMR32B0EMR	R/W	0x03C	External Match Register (EMR). The EMR controls the match function and the external match pins CT32B0_MAT[3:0].	0
-	-	0x040 - 0x06C	Reserved	-
TMR32B0CTCR	R/W	0x070	Count Control Register (CTCR). The CTCR selects between Timer and Counter mode, and in Counter mode selects the signal and edge(s) for counting.	0
TMR32B0PWMC	R/W	0x074	PWM Control Register (PWMCON). The PWMCON enables PWM mode for the external match pins CT32B0_MAT[3:0].	0

[1] Reset value reflects the data stored in used bits only. It does not include reserved bits content.

All information provided in this document is subject to legal disclaimers.
© NXP B.V. 2012. All rights reserved.

Table 328. Register overview: 32-bit counter/timer 1 CT32B1 (base address 0x4001 8000)

Name	Access	Address offset	Description	Reset value[1]
TMR32B1IR	R/W	0x000	Interrupt Register (IR). The IR can be written to clear interrupts. The IR can be read to identify which of five possible interrupt sources are pending.	0
TMR32B1TCR	R/W	0x004	Timer Control Register (TCR). The TCR is used to control the Timer Counter functions. The Timer Counter can be disabled or reset through the TCR.	0
TMR32B1TC	R/W	0x008	Timer Counter (TC). The 32-bit TC is incremented every PR+1 cycles of PCLK. The TC is controlled through the TCR.	0
TMR32B1PR	R/W	0x00C	Prescale Register (PR). When the Prescale Counter (below) is equal to this value, the next clock increments the TC and clears the PC.	0
TMR32B1PC	R/W	0x010	Prescale Counter (PC). The 32-bit PC is a counter which is incremented to the value stored in PR. When the value in PR is reached, the TC is incremented and the PC is cleared. The PC is observable and controllable through the bus interface.	0
TMR32B1MCR	R/W	0x014	Match Control Register (MCR). The MCR is used to control if an interrupt is generated and if the TC is reset when a Match occurs.	0
TMR32B1MR0	R/W	0x018	Match Register 0 (MR0). MR0 can be enabled through the MCR to reset the TC, stop both the TC and PC, and/or generate an interrupt every time MR0 matches the TC.	0
TMR32B1MR1	R/W	0x01C	Match Register 1 (MR1). See MR0 description.	0
TMR32B1MR2	R/W	0x020	Match Register 2 (MR2). See MR0 description.	0
TMR32B1MR3	R/W	0x024	Match Register 3 (MR3). See MR0 description.	0
TMR32B1CCR	R/W	0x028	Capture Control Register (CCR). The CCR controls which edges of the capture inputs are used to load the Capture Registers and whether or not an interrupt is generated when a capture takes place.	0
TMR32B1CR0	RO	0x02C	Capture Register 0 (CR0). CR0 is loaded with the value of TC when there is an event on the CT32B1_CAP0 input.	0
TMR32B1CR1	RO	0x030	Capture Register 1 (CR1). CR1 is loaded with the value of TC when there is an event on the CT32B1_CAP1 input.	0
-	-	0x034 - 0x038	Reserved	-
TMR32B1EMR	R/W	0x03C	External Match Register (EMR). The EMR controls the match function and the external match pins CT32B1_MAT[3:0].	0
-	-	0x040 - 0x06C	Reserved	-
TMR32B1CTCR	R/W	0x070	Count Control Register (CTCR). The CTCR selects between Timer and Counter mode, and in Counter mode selects the signal and edge(s) for counting.	0
TMR32B1PWMC	R/W	0x074	PWM Control Register (PWMCON). The PWMCON enables PWM mode for the external match pins CT32B1_MAT[3:0].	0

[1] Reset value reflects the data stored in used bits only. It does not include reserved bits content.

All information provided in this document is subject to legal disclaimers.
© NXP B.V. 2012. All rights reserved.

21.7.1 Interrupt Register (TMR32B0IR and TMR32B1IR)

The Interrupt Register consists of four bits for the match interrupts and one bit for the capture interrupts. If an interrupt is generated then the corresponding bit in the IR will be HIGH. Otherwise, the bit will be LOW. Writing a logic one to the corresponding IR bit will reset the interrupt. Writing a zero has no effect.

Table 329: Interrupt Register (TMR32B0IR - address 0x4001 4000 and TMR32B1IR - address 0x4001 8000) bit description

Bit	Symbol	Description	Reset value
0	MR0INT	Interrupt flag for match channel 0.	0
1	MR1INT	Interrupt flag for match channel 1.	0
2	MR2INT	Interrupt flag for match channel 2.	0
3	MR3INT	Interrupt flag for match channel 3.	0
4	CR0INT	Interrupt flag for capture channel 0 event.	0
5	CR1INT	Interrupt flag for capture channel 1 event.	0
31:6	-	Reserved	-

21.7.2 Timer Control Register (TMR32B0TCR and TMR32B1TCR)

The Timer Control Register (TCR) is used to control the operation of the counter/timer.

Table 330: Timer Control Register (TMR32B0TCR - address 0x4001 4004 and TMR32B1TCR - address 0x4001 8004) bit description

Bit	Symbol	Description	Reset value
0	CEN	When one, the Timer Counter and Prescale Counter are enabled for counting. When zero, the counters are disabled.	0
1	CRST	When one, the Timer Counter and the Prescale Counter are synchronously reset on the next positive edge of PCLK. The counters remain reset until TCR[1] is returned to zero.	0
31:2	-	Reserved, user software should not write ones to reserved bits. The value read from a reserved bit is not defined.	NA

21.7.3 Timer Counter (TMR32B0TC - address 0x4001 4008 and TMR32B1TC - address 0x4001 8008)

The 32-bit Timer Counter is incremented when the Prescale Counter reaches its terminal count. Unless it is reset before reaching its upper limit, the TC will count up through the value 0xFFFF FFFF and then wrap back to the value 0x0000 0000. This event does not cause an interrupt, but a Match register can be used to detect an overflow if needed.

Table 331: Timer counter registers (TMR32B0TC, address 0x4001 4008 and TMR32B1TC 0x4001 8008) bit description

Bit	Symbol	Description	Reset value
31:0	TC	Timer counter value.	0

All information provided in this document is subject to legal disclaimers.
© NXP B.V. 2012. All rights reserved.

21.7.4 Prescale Register (TMR32B0PR - address 0x4001 400C and TMR32B1PR - address 0x4001 800C)

The 32-bit Prescale Register specifies the maximum value for the Prescale Counter.

Table 332: Prescale registers (TMR32B0PR, address 0x4001 400C and TMR32B1PR 0x4001 800C) bit description

Bit	Symbol	Description	Reset value
31:0	PR	Prescale value.	0

21.7.5 Prescale Counter Register (TMR32B0PC - address 0x4001 4010 and TMR32B1PC - address 0x4001 8010)

The 32-bit Prescale Counter controls division of PCLK by some constant value before it is applied to the Timer Counter. This allows control of the relationship between the resolution of the timer and the maximum time before the timer overflows. The Prescale Counter is incremented on every PCLK. When it reaches the value stored in the Prescale Register, the Timer Counter is incremented, and the Prescale Counter is reset on the next PCLK. This causes the TC to increment on every PCLK when PR = 0, every 2 PCLKs when PR = 1, etc.

Table 333: Prescale counter registers (TMR32B0PC, address 0x4001 4010 and TMR32B1PC 0x4001 8010) bit description

Bit	Symbol	Description	Reset value
31:0	PC	Prescale counter value.	0

21.7.6 Match Control Register (TMR32B0MCR and TMR32B1MCR)

The Match Control Register is used to control what operations are performed when one of the Match Registers matches the Timer Counter. The function of each of the bits is shown in Table 334.

Table 334: Match Control Register (TMR32B0MCR - address 0x4001 4014 and TMR32B1MCR - address 0x4001 8014) bit description

Bit	Symbol	Value	Description	Reset value
0	MR0I		Interrupt on MR0: an interrupt is generated when MR0 matches the value in the TC.	0
		1	Enabled	
		0	Disabled	
1	MR0R		Reset on MR0: the TC will be reset if MR0 matches it.	0
		1	Enabled	
		0	Disabled	
2	MR0S		Stop on MR0: the TC and PC will be stopped and TCR[0] will be set to 0 if MR0 matches the TC.	0
		1	Enabled	
		0	Disabled	

All information provided in this document is subject to legal disclaimers.
© NXP B.V. 2012. All rights reserved.

Table 334: Match Control Register (TMR32B0MCR - address 0x4001 4014 and TMR32B1MCR - address 0x4001 8014) bit description

Bit	Symbol	Value	Description	Reset value
3	MR1I		Interrupt on MR1: an interrupt is generated when MR1 matches the value in the TC.	0
		1	Enabled	
		0	Disabled	
4	MR1R		Reset on MR1: the TC will be reset if MR1 matches it.	0
		1	Enabled	
		0	Disabled	
5	MR1S		Stop on MR1: the TC and PC will be stopped and TCR[0] will be set to 0 if MR1 matches the TC.	0
		1	Enabled	
		0	Disabled	
6	MR2I		Interrupt on MR2: an interrupt is generated when MR2 matches the value in the TC.	0
		1	Enabled	
		0	Disabled	
7	MR2R		Reset on MR2: the TC will be reset if MR2 matches it.	0
		1	Enabled	
		0	Disabled	
8	MR2S		Stop on MR2: the TC and PC will be stopped and TCR[0] will be set to 0 if MR2 matches the TC.	0
		1	Enabled	
		0	Disabled	
9	MR3I		Interrupt on MR3: an interrupt is generated when MR3 matches the value in the TC.	0
		1	Enabled	
		0	Disabled	
10	MR3R		Reset on MR3: the TC will be reset if MR3 matches it.	0
		1	Enabled	
		0	Disabled	
11	MR3S		Stop on MR3: the TC and PC will be stopped and TCR[0] will be set to 0 if MR3 matches the TC.	0
		1	Enabled	
		0	Disabled	
31:12	-		Reserved, user software should not write ones to reserved bits. The value read from a reserved bit is not defined.	NA

21.7.7 Match Registers (TMR32B0MR0/1/2/3 - addresses 0x4001 4018/1C/20/24 and TMR32B1MR0/1/2/3 addresses 0x4001 8018/1C/20/24)

The Match register values are continuously compared to the Timer Counter value. When the two values are equal, actions can be triggered automatically. The action possibilities are to generate an interrupt, reset the Timer Counter, or stop the timer. Actions are controlled by the settings in the MCR register.

All information provided in this document is subject to legal disclaimers.
© NXP B.V. 2012. All rights reserved.

Table 335: Match registers (TMR32B0MR0 to 3, addresses 0x4001 4018 to 24 and TMR32B1MR0 to 3, addresses 0x4001 8018 to 24) bit description

Bit	Symbol	Description	Reset value
31:0	MATCH	Timer counter match value.	0

21.7.8 Capture Control Register (TMR32B0CCR and TMR32B1CCR)

The Capture Control Register is used to control whether the Capture Register is loaded with the value in the Timer Counter when the capture event occurs, and whether an interrupt is generated by the capture event. Setting both the rising and falling bits at the same time is a valid configuration, resulting in a capture event for both edges. In the description below, “n” represents the Timer number, 0 or 1.

Table 336: Capture Control Register (TMR32B0CCR - address 0x4001 4028 and TMR32B1CCR - address 0x4001 8028) bit description

Bit	Symbol	Value	Description	Reset value
0	CAP0RE		Capture on CT32Bn_CAP0 rising edge: a sequence of 0 then 1 on CT32Bn_CAP0 will cause CR0 to be loaded with the contents of TC.	0
		1	Enabled	
		0	Disabled	
1	CAP0FE		Capture on CT32Bn_CAP0 falling edge: a sequence of 1 then 0 on CT32Bn_CAP0 will cause CR0 to be loaded with the contents of TC.	0
		1	Enabled	
		0	Disabled	
2	CAP0I		Interrupt on CT32Bn_CAP0 event: a CR0 load due to a CT32Bn_CAP0 event will generate an interrupt.	0
		1	Enabled	
		0	Disabled	
3	CAP1RE		Capture on CT32Bn_CAP1 rising edge: a sequence of 0 then 1 on CT32Bn_CAP1 will cause CR1 to be loaded with the contents of TC.	0
		1	Enabled	
		0	Disabled	
4	CAP1FE		Capture on CT32Bn_CAP1 falling edge: a sequence of 1 then 0 on CT32Bn_CAP1 will cause CR1 to be loaded with the contents of TC.	0
		1	Enabled	
		0	Disabled	
5	CAP1I		Interrupt on CT32Bn_CAP1 event: a CR1 load due to a CT32Bn_CAP1 event will generate an interrupt.	0
		1	Enabled	
		0	Disabled	
31:6	-		Reserved, user software should not write ones to reserved bits. The value read from a reserved bit is not defined.	NA

All information provided in this document is subject to legal disclaimers.
© NXP B.V. 2012. All rights reserved.

21.7.9 Capture Register (TMR32B0CR0/1 - address 0x4001 402C/30 and TMR32B1CR0/1 - address 0x4001 802C/30)

Each Capture register is associated with a device pin and may be loaded with the Timer Counter value when a specified event occurs on that pin. The settings in the Capture Control Register register determine whether the capture function is enabled and whether a capture event happens on the rising edge of the associated pin, the falling edge, or on both edges.

Table 337: Capture registers (TMR32B0CR0/1, addresses 0x4001 402C/30 and TMR32B1CR0/1, addresses 0x4001 802C/30) bit description

Bit	Symbol	Description	Reset value
31:0	CAP	Timer counter capture value.	0

21.7.10 External Match Register (TMR32B0EMR and TMR32B1EMR)

The External Match Register provides both control and status of the external match pins CAP32Bn_MAT[3:0].

If the match outputs are configured as PWM output, the function of the external match registers is determined by the PWM rules (Section 21.8.2 “Rules for single edge controlled PWM outputs” on page 381).

Table 338: External Match Register (TMR32B0EMR - address 0x4001 403C and TMR32B1EMR - address0x4001 803C) bit description

Bit	Symbol	Value	Description	Reset value
0	EM0		External Match 0. This bit reflects the state of output CT32Bn_MAT0, whether or not this output is connected to its pin. When a match occurs between the TC and MR0, this bit can either toggle, go LOW, go HIGH, or do nothing. Bits EMR[5:4] control the functionality of this output. This bit is driven to the CT32B0_MAT0/CT16B1_MAT0 pins if the match function is selected in the IOCON registers (0 = LOW, 1 = HIGH).	0
1	EM1		External Match 1. This bit reflects the state of output CT32Bn_MAT1, whether or not this output is connected to its pin. When a match occurs between the TC and MR1, this bit can either toggle, go LOW, go HIGH, or do nothing. Bits EMR[7:6] control the functionality of this output. This bit is driven to the CT32B0_MAT1/CT16B1_MAT1 pins if the match function is selected in the IOCON registers (0 = LOW, 1 = HIGH).	0
2	EM2		External Match 2. This bit reflects the state of output CT32Bn_MAT2, whether or not this output is connected to its pin. When a match occurs between the TC and MR2, this bit can either toggle, go LOW, go HIGH, or do nothing. Bits EMR[9:8] control the functionality of this output. This bit is driven to the CT32B0_MAT2/CT16B1_MAT2 pins if the match function is selected in the IOCON registers (0 = LOW, 1 = HIGH).	0
3	EM3		External Match 3. This bit reflects the state of output CT32Bn_MAT3, whether or not this output is connected to its pin. When a match occurs between the TC and MR3, this bit can either toggle, go LOW, go HIGH, or do nothing. Bits EMR[11:10] control the functionality of this output. This bit is driven to the CT32B0_MAT3/CT16B1_MAT3 pins if the match function is selected in the IOCON registers (0 = LOW, 1 = HIGH).	0

All information provided in this document is subject to legal disclaimers.
© NXP B.V. 2012. All rights reserved.

Table 338: External Match Register (TMR32B0EMR - address 0x4001 403C and TMR32B1EMR - address0x4001 803C) bit description

Bit	Symbol	Value	Description	Reset value
5:4	EMC0		External Match Control 0. Determines the functionality of External Match 0.	00
		0x0	Do Nothing.	
		0x1	Clear the corresponding External Match bit/output to 0 (CT32Bn_MATm pin is LOW if pinned out).	
		0x2	Set the corresponding External Match bit/output to 1 (CT32Bn_MATm pin is HIGH if pinned out).	
		0x3	Toggle the corresponding External Match bit/output.	
7:6	EMC1		External Match Control 1. Determines the functionality of External Match 1.	00
		0x0	Do Nothing.	
		0x1	Clear the corresponding External Match bit/output to 0 (CT32Bn_MATm pin is LOW if pinned out).	
		0x2	Set the corresponding External Match bit/output to 1 (CT32Bn_MATm pin is HIGH if pinned out).	
		0x3	Toggle the corresponding External Match bit/output.	
9:8	EMC2		External Match Control 2. Determines the functionality of External Match 2.	00
		0x0	Do Nothing.	
		0x1	Clear the corresponding External Match bit/output to 0 (CT32Bn_MATm pin is LOW if pinned out).	
		0x2	Set the corresponding External Match bit/output to 1 (CT32Bn_MATm pin is HIGH if pinned out).	
		0x3	Toggle the corresponding External Match bit/output.	
11:10	EMC3		External Match Control 3. Determines the functionality of External Match 3.	00
		0x0	Do Nothing.	
		0x1	Clear the corresponding External Match bit/output to 0 (CT32Bn_MATm pin is LOW if pinned out).	
		0x2	Set the corresponding External Match bit/output to 1 (CT32Bn_MATm pin is HIGH if pinned out).	
		0x3	Toggle the corresponding External Match bit/output.	
31:12	-		Reserved, user software should not write ones to reserved bits. The value read from a reserved bit is not defined.	NA

Table 339. External match control

EMR[11:10], EMR[9:8], EMR[7:6], or EMR[5:4]	Function
00	Do Nothing.
01	Clear the corresponding External Match bit/output to 0 (CT32Bn_MATm pin is LOW if pinned out).
10	Set the corresponding External Match bit/output to 1 (CT32Bn_MATm pin is HIGH if pinned out).
11	Toggle the corresponding External Match bit/output.

All information provided in this document is subject to legal disclaimers.
© NXP B.V. 2012. All rights reserved.

21.7.11 Count Control Register (TMR32B0CTCR and TMR32B1TCR)

The Count Control Register (CTCR) is used to select between Timer and Counter mode, and in Counter mode to select the pin and edge(s) for counting.

When Counter Mode is chosen as a mode of operation, the CAP input (selected by the CTCR bits 3:2) is sampled on every rising edge of the PCLK clock. After comparing two consecutive samples of this CAP input, one of the following four events is recognized: rising edge, falling edge, either of edges or no changes in the level of the selected CAP input. Only if the identified event occurs, and the event corresponds to the one selected by bits 1:0 in the CTCR register, will the Timer Counter register be incremented.

Effective processing of the externally supplied clock to the counter has some limitations. Since two successive rising edges of the PCLK clock are used to identify only one edge on the CAP selected input, the frequency of the CAP input can not exceed one half of the PCLK clock. Consequently, duration of the HIGH/LOW levels on the same CAP input in this case can not be shorter than 1/(2 × PCLK).

Bits 7:4 of this register are used to enable and configure the capture-clears-timer feature. This feature allows for a designated edge on a particular CAP input to reset the timer to all zeros. Using this mechanism to clear the timer on the leading edge of an input pulse and performing a capture on the trailing edge permits direct pulse-width measurement using a single capture input without the need to perform a subtraction operation in software.

Table 340: Count Control Register (TMR32B0CTCR - address 0x4001 4070 and TMR32B1TCR - address 0x4001 8070) bit description

Bit	Symbol	Value	Description	Reset value
1:0	CTM		Counter/Timer Mode. This field selects which rising PCLK edges can increment Timer's Prescale Counter (PC), or clear PC and increment Timer Counter (TC). Timer Mode: every rising PCLK edge	00
		0x0	Timer Mode: every rising PCLK edge	
		0x1	Counter Mode: TC is incremented on rising edges on the CAP input selected by bits 3:2.	
		0x2	Counter Mode: TC is incremented on falling edges on the CAP input selected by bits 3:2.	
		0x3	Counter Mode: TC is incremented on both edges on the CAP input selected by bits 3:2.	
3:2	CIS		Count Input Select. When bits 1:0 in this register are not 00, these bits select which CAP pin is sampled for clocking:	00
		0x0	CT32Bn_CAP0	
		0x1	CT32Bn_CAP1	
		0x2	Reserved	
		0x3	Reserved **Note:** If Counter mode is selected in the TnCTCR, the 3 bits for that input in the Capture Control Register (TnCCR) must be programmed as 000.	
4	ENCC		Setting this bit to one enables clearing of the timer and the prescaler when the capture-edge event specified in bits 7:5 occurs.	0

All information provided in this document is subject to legal disclaimers.
© NXP B.V. 2012. All rights reserved.

Table 340: Count Control Register (TMR32B0CTCR - address 0x4001 4070 and TMR32B1TCR - address 0x4001 8070) bit description *…continued*

Bit	Symbol	Value	Description	Reset value
7:5	SELCC		When bit 4 is one, these bits select which capture input edge will cause the timer and prescaler to be cleared. These bits have no effect when bit 4 is zero.	0
		0x0	Rising Edge of CAP0 clears the timer (if bit 4 is set).	
		0x1	Falling Edge of CAP0 clears the timer (if bit 4 is set).	
		0x2	Rising Edge of CAP1 clears the timer (if bit 4 is set).	
		0x3	Falling Edge of CAP1 clears the timer (if bit 4 is set).	
		0x4	Reserved.	
		0x5	Reserved.	
		0x6	Reserved.	
		0x7	Reserved.	
31:8	-	-	Reserved, user software should not write ones to reserved bits. The value read from a reserved bit is not defined.	-

21.7.12 PWM Control Register (TMR32B0PWMC and TMR32B1PWMC)

The PWM Control Register is used to configure the match outputs as PWM outputs. Each match output can be independently set to perform either as PWM output or as match output whose function is controlled by the External Match Register (EMR).

For each timer, a maximum of three-single edge controlled PWM outputs can be selected on the MATn[2:0] outputs. One additional match register determines the PWM cycle length. When a match occurs in any of the other match registers, the PWM output is set to HIGH. The timer is reset by the match register that is configured to set the PWM cycle length. When the timer is reset to zero, all currently HIGH match outputs configured as PWM outputs are cleared.

Table 341: PWM Control Register (TMR32B0PWMC - 0x4001 4074 and TMR32B1PWMC - 0x4001 8074) bit description

Bit	Symbol	Value	Description	Reset value
0	PWMEN0		PWM channel 0 enable	0
		0	CT32Bn_MAT0 is controlled by EM0.	
		1	PWM mode is enabled for CT32Bn_MAT0.	
1	PWMEN1		PWM channel 1 enable	0
		0	CT32Bn_MAT1 is controlled by EM1.	
		1	PWM mode is enabled for CT32Bn_MAT1.	
2	PWMEN2		PWM channel 2 enable	0
		0	CT32Bn_MAT2 is controlled by EM2.	
		1	PWM mode is enabled for CT32Bn_MAT2.	

All information provided in this document is subject to legal disclaimers.
© NXP B.V. 2012. All rights reserved.

Table 341: PWM Control Register (TMR32B0PWMC - 0x4001 4074 and TMR32B1PWMC - 0x4001 8074) bit description

Bit	Symbol	Value	Description	Reset value
3	PWMEN3		PWM channel 3 enable **Note:** It is recommended to use match channel 3 to set the PWM cycle.	0
		0	CT32Bn_MAT3 is controlled by EM3.	
		1	PWM mode is enabled for CT32Bn_MAT3.	
31:4	-		Reserved, user software should not write ones to reserved bits. The value read from a reserved bit is not defined.	NA

21.8 Functional description

21.8.1 Example timer operation

Figure 80 shows a timer configured to reset the count and generate an interrupt on match. The prescaler is set to 2 and the match register set to 6. At the end of the timer cycle where the match occurs, the timer count is reset. This gives a full length cycle to the match value. The interrupt indicating that a match occurred is generated in the next clock after the timer reached the match value.

Figure 81 shows a timer configured to stop and generate an interrupt on match. The prescaler is again set to 2 and the match register set to 6. In the next clock after the timer reaches the match value, the timer enable bit in TCR is cleared, and the interrupt indicating that a match occurred is generated.

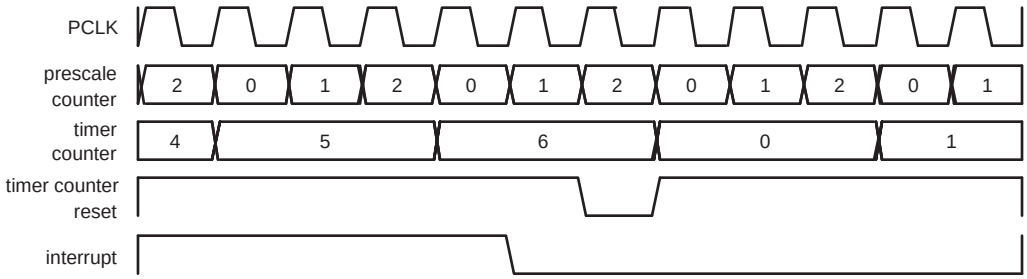

Fig 80. A timer cycle in which PR=2, MRx=6, and both interrupt and reset on match are enabled

All information provided in this document is subject to legal disclaimers.

© NXP B.V. 2012. All rights reserved.

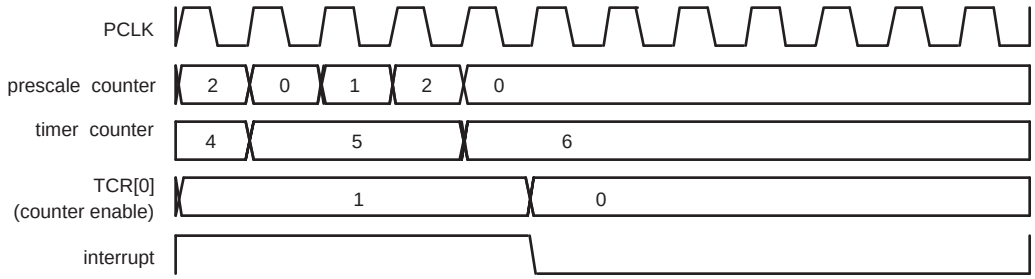

Fig 81. A timer cycle in which PR=2, MRx=6, and both interrupt and stop on match are enabled

21.8.2 Rules for single edge controlled PWM outputs

1. All single edge controlled PWM outputs go LOW at the beginning of each PWM cycle (timer is set to zero) unless their match value is equal to zero.
2. Each PWM output will go HIGH when its match value is reached. If no match occurs (i.e. the match value is greater than the PWM cycle length), the PWM output remains continuously LOW.
3. If a match value larger than the PWM cycle length is written to the match register, and the PWM signal is HIGH already, then the PWM signal will be cleared with the start of the next PWM cycle.
4. If a match register contains the same value as the timer reset value (the PWM cycle length), then the PWM output will be reset to LOW on the next clock tick after the timer reaches the match value. Therefore, the PWM output will always consist of a one clock tick wide positive pulse with a period determined by the PWM cycle length (i.e. the timer reload value).
5. If a match register is set to zero, then the PWM output will go to HIGH the first time the timer goes back to zero and will stay HIGH continuously.

Note: When the match outputs are selected to function as PWM outputs, the timer reset (MRnR) and timer stop (MRnS) bits in the Match Control Register MCR must be set to 0 except for the match register setting the PWM cycle length. For this register, set the MRnR bit to 1 to enable the timer reset when the timer value matches the value of the corresponding match register.

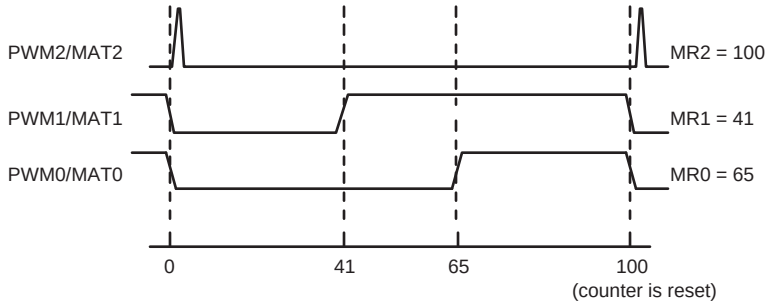

Fig 82. Sample PWM waveforms with a PWM cycle length of 100 (selected by MR3) and MAT3:0 enabled as PWM outputs by the PWMC register.

All information provided in this document is subject to legal disclaimers.

© NXP B.V. 2012. All rights reserved.

21.9 Architecture

The block diagram for 32-bit counter/timer0 and 32-bit counter/timer1 is shown in Figure 83.

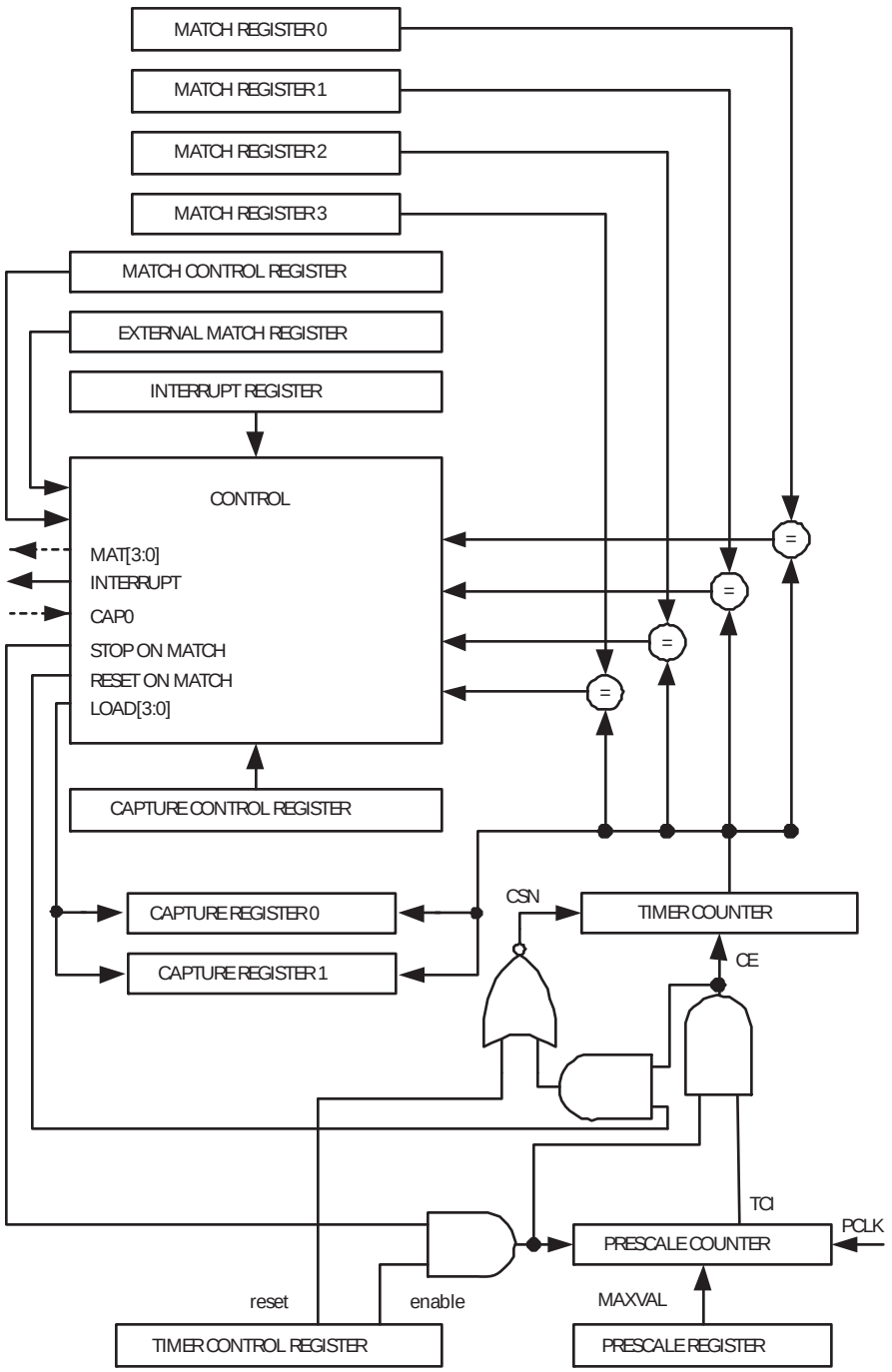

Fig 83. 32-bit counter/timer block diagram

All information provided in this document is subject to legal disclaimers.
© NXP B.V. 2012. All rights reserved.

22.1 How to read this chapter

This chapter describes the Windowed WDT available on all parts of the LPC1100L and :LPC1100XL series.

22.2 Basic configuration

The WDT is configured using the following registers:

1. Pins: The WDT uses no external pins.
2. Power: In the SYSAHBCLKCTRL register, set bit 15 (Table 21).
3. Peripheral clock: Select the WDT clock source (Table 25) and enable the WDT peripheral clock by writing to the WDTCLKDIV register (Table 27).

   Remark: The frequency of the watchdog oscillator is undefined after reset. The watchdog oscillator frequency must be programmed by writing to the WDTOSCCTRL register (see Table 13) before using the watchdog oscillator for the WDT.
4. Lock features: Once the watchdog timer is enabled by setting the WDEN bit in the WDMOD register, the following lock features are in effect:
   a. The WDEN bit cannot be changed to 0, that is the WDT cannot be disabled.
   b. The watch dog clock source cannot be changed. If the WDT is needed in Deep-sleep mode, select the watch dog oscillator as the clock source before setting the WDEN bit.

22.3 Features

- Internally resets chip if not reloaded during the programmable time-out period.
- Optional windowed operation requires reload to occur between a minimum and maximum time-out period, both programmable.
- Optional warning interrupt can be generated at a programmable time prior to watchdog time-out.
- Programmable 24-bit timer with internal fixed pre-scaler.
- Selectable time period from 1,024 watchdog clocks ($T_{WDCLK} \times 256 \times 4$) to over 67 million watchdog clocks ($T_{WDCLK} \times 2^{24} \times 4$) in increments of 4 watchdog clocks.
- “Safe” watchdog operation. Once enabled, requires a hardware reset or a Watchdog reset to be disabled.
- A dedicated on-chip watchdog oscillator provides a reliable clock source that cannot be turned off when the Watchdog Timer is running.
- Incorrect feed sequence causes immediate watchdog reset if the watchdog is enabled.
- The watchdog reload value can optionally be protected such that it can only be changed after the “warning interrupt” time is reached.

All information provided in this document is subject to legal disclaimers. © NXP B.V. 2012. All rights reserved.

- Flag to indicate Watchdog reset.

22.4 Applications

The purpose of the Watchdog Timer is to reset the microcontroller within a reasonable amount of time if it enters an erroneous state. When enabled, a watchdog event will be generated if the user program fails to feed (or reload) the Watchdog within a predetermined amount of time. The Watchdog event will cause a chip reset if configured to do so.

When a watchdog window is programmed, an early watchdog feed is also treated as a watchdog event. This allows preventing situations where a system failure may still feed the watchdog. For example, application code could be stuck in an interrupt service that contains a watchdog feed. Setting the window such that this would result in an early feed will generate a watchdog event, allowing for system recovery.

.

22.5 General description

The Watchdog consists of a fixed divide-by-4 pre-scaler and a 24-bit counter which decrements when clocked. The minimum value from which the counter decrements is 0xFF. Setting a value lower than 0xFF causes 0xFF to be loaded in the counter. Hence the minimum Watchdog interval is ($T_{WDCLK} \times 256 \times 4$) and the maximum Watchdog interval is ($T_{WDCLK} \times 2^{24} \times 4$) in multiples of ($T_{WDCLK} \times 4$). The Watchdog should be used in the following manner:

- Set the Watchdog timer constant reload value in WDTC register.
- Setup the Watchdog timer operating mode in WDMOD register.
- Set a value for the watchdog window time in WDWINDOW register if windowed operation is required.
- Set a value for the watchdog warning interrupt in the WDWARNINT register if a warning interrupt is required.
- Enable the Watchdog by writing 0xAA followed by 0x55 to the WDFEED register.
- The Watchdog must be fed again before the Watchdog counter reaches zero in order to prevent a watchdog event. If a window value is programmed, the feed must also occur after the watchdog counter passes that value.

When the Watchdog Timer is configured so that a watchdog event will cause a reset and the counter reaches zero, the CPU will be reset, loading the stack pointer and program counter from the vector table as in the case of external reset. The Watchdog time-out flag (WDTOF) can be examined to determine if the Watchdog has caused the reset condition. The WDTOF flag must be cleared by software.

When the Watchdog Timer is configured to generate a warning interrupt, the interrupt will occur when the counter matches the value defined by the WDWARNINT register.

The block diagram of the Watchdog is shown below in the Figure 84. The synchronization logic (PCLK - WDCLK) is not shown in the block diagram.

All information provided in this document is subject to legal disclaimers.
© NXP B.V. 2012. All rights reserved.

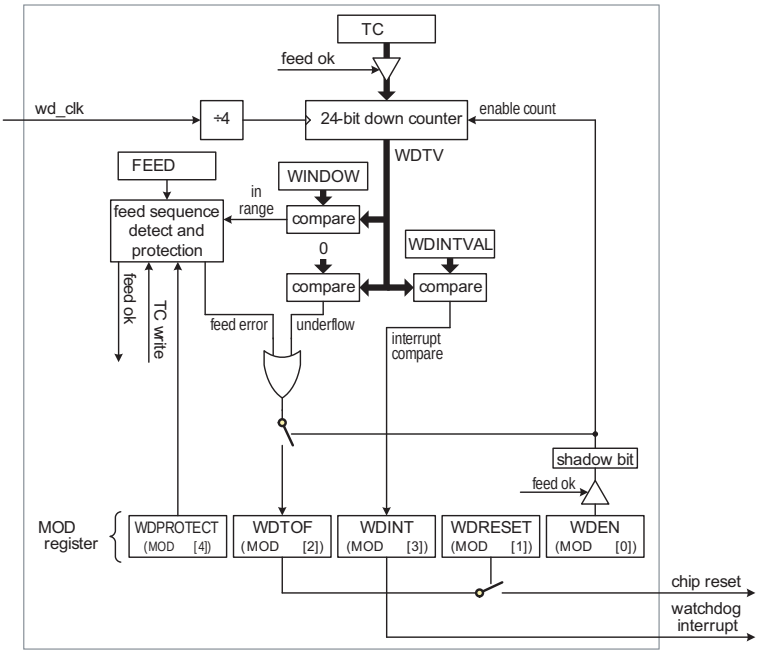

Fig 84. Windowed Watchdog Timer (WWDT) block diagram

22.6 Clock control

The watchdog timer block uses two clocks: PCLK and WDCLK. PCLK is used for the APB accesses to the watchdog registers and is derived from the system clock (see Figure 8). The WDCLK is used for the watchdog timer counting and is derived from the WDT clock divider in Figure 8. Several clocks can be used as a clock source for wdt_clk clock: the IRC, the watchdog oscillator, and the main clock. The clock source is selected in the syscon block (see Table 25). The WDCLK has its own clock divider (Table 27) which can also disable this clock.

There is some synchronization logic between these two clock domains. When the WDMOD and WDTC registers are updated by APB operations, the new value will take effect in 3 WDCLK cycles on the logic in the WDCLK clock domain. When the watchdog timer is counting on WDCLK, the synchronization logic will first lock the value of the counter on WDCLK and then synchronize it with the PCLK for reading as the WDTV register by the CPU.

The watchdog oscillator can be powered down in the PDRUNCFG register (Table 43) if it is not used. The clock to the watchdog register block (PCLK) can be disabled in the SYSAHBCLKCTRL register (Table 21) for power savings.

Remark: The frequency of the watchdog oscillator is undefined after reset. The watchdog oscillator frequency must be programmed by writing to the WDTOSCCTRL register (see Table 13) before using the watchdog oscillator for the WDT.

All information provided in this document is subject to legal disclaimers.
© NXP B.V. 2012. All rights reserved.

22.7 Register description

The Watchdog contains the registers shown in Table 342.

Table 342. Register overview: Watchdog timer (base address 0x4000 4000)

Name	Access	Address offset	Description	Reset value[1]
WDMOD	R/W	0x000	Watchdog mode register. This register contains the basic mode and status of the Watchdog Timer.	0
WDTC	R/W	0x004	Watchdog timer constant register. This register determines the time-out value.	0xFF
WDFEED	WO	0x008	Watchdog feed sequence register. Writing 0xAA followed by 0x55 to this register reloads the Watchdog timer with the value contained in WDTC.	-
WDTV	RO	0x00C	Watchdog timer value register. This register reads out the current value of the Watchdog timer.	0xFF
WDWARNINT	R/W	0x014	Watchdog Warning Interrupt compare value.	0
WDWINDOW	R/W	0x018	Watchdog Window compare value.	0xFF FFFF

[1] Reset Value reflects the data stored in used bits only. It does not include reserved bits content.

22.7.1 Watchdog Mode register

The WDMOD register controls the operation of the Watchdog as per the combination of WDEN and RESET bits. Note that a watchdog feed must be performed before any changes to the WDMOD register take effect.

Table 343: Watchdog Mode register (WDMOD - 0x4000 4000) bit description

Bit	Symbol	Value	Description	Reset value
0	WDEN		Watchdog enable bit. This bit is Set Only. **Remark:** Setting this bit to one also locks the watchdog clock source. Once the watchdog timer is enabled, the watchdog timer clock source cannot be changed. If the watchdog timer is needed in Deep-sleep mode, the watchdog clock source must be changed to the watchdog oscillator before setting this bit to one.	0
		0	The watchdog timer is stopped.	
		1	The watchdog timer is running.	
1	WDRESET		Watchdog reset enable bit. This bit is Set Only.	0
		0	A watchdog timeout will not cause a chip reset.	
		1	A watchdog timeout will cause a chip reset.	
2	WDTOF		Watchdog time-out flag. Set when the watchdog timer times out, by a feed error, or by events associated with WDPROTECT, cleared by software. Causes a chip reset if WDRESET = 1.	0 (Only after external reset)
3	WDINT		Watchdog interrupt flag. Set when the timer reaches the value in WDWARNINT. Cleared by software.	0

All information provided in this document is subject to legal disclaimers.
© NXP B.V. 2012. All rights reserved.

Table 343: Watchdog Mode register (WDMOD - 0x4000 4000) bit description

Bit	Symbol	Value	Description	Reset value
4	WDPROTECT		Watchdog update mode. This bit is Set Only.	0
		0	The watchdog reload value (WDTC) can be changed at any time.	
		1	The watchdog reload value (WDTC) can be changed only after the counter is below the value of WDWARNINT and WDWINDOW. **Note**: this mode is intended for use only when WDRESET =1.	
31:5	-		Reserved. Read value is undefined, only zero should be written.	-

Once the **WDEN**, **WDPROTECT**, or **WDRESET** bits are set they can not be cleared by software. Both flags are cleared by an external reset or a Watchdog timer reset.

WDTOF The Watchdog time-out flag is set when the Watchdog times out, when a feed error occurs, or when WDPROTECT =1 and an attempt is made to write to the WDTC register. This flag is cleared by software writing a 0 to this bit.

WDINT The Watchdog interrupt flag is set when the Watchdog counter reaches the value specified by WDWARNINT. This flag is cleared when any reset occurs, and is cleared by software by writing a 1 to this bit.

Watchdog reset or interrupt will occur any time the watchdog is running. If a watchdog interrupt occurs in Sleep mode, it will wake up the device.

Table 344. Watchdog operating modes selection

WDEN	WDRESET	Mode of Operation
0	X (0 or 1)	Debug/Operate without the Watchdog running.
1	0	Watchdog interrupt mode: the watchdog warning interrupt will be generated but watchdog reset will not. When this mode is selected, the watchdog counter reaching the value specified by WDWARNINT will set the WDINT flag and the Watchdog interrupt request will be generated.
1	1	Watchdog reset mode: both the watchdog interrupt and watchdog reset are enabled. When this mode is selected, the watchdog counter reaching the value specified by WDWARNINT will set the WDINT flag and the Watchdog interrupt request will be generated, and the watchdog counter reaching zero will reset the microcontroller. A watchdog feed prior to reaching the value of WDWINDOW will also cause a watchdog reset.

22.7.2 Watchdog Timer Constant register

The WDTC register determines the time-out value. Every time a feed sequence occurs the WDTC content is reloaded in to the Watchdog timer. This is pre-loaded with the value 0x00 00FF upon reset. Writing values below 0xFF will cause 0x00 00FF to be loaded into the WDTC. Thus the minimum time-out interval is $T_{WDCLK} \times 256 \times 4$.

If the WDPROTECT bit in WDMOD = 1, an attempt to change the value of WDTC before the watchdog counter is below the values of WDWARNINT and WDWINDOW will cause a watchdog reset and set the WDTOF flag.

All information provided in this document is subject to legal disclaimers.
© NXP B.V. 2012. All rights reserved.

Table 345: Watchdog Timer Constant register (WDTC - 0x4000 4004) bit description

Bit	Symbol	Description	Reset value
23:0	Count	Watchdog time-out interval.	0x00 00FF
31:24	-	Reserved. Read value is undefined, only zero should be written.	NA

22.7.3 Watchdog Feed register

Writing 0xAA followed by 0x55 to this register will reload the Watchdog timer with the WDTC value. This operation will also start the Watchdog if it is enabled via the WDMOD register. Setting the WDEN bit in the WDMOD register is not sufficient to enable the Watchdog. A valid feed sequence must be completed after setting WDEN before the Watchdog is capable of generating a reset. Until then, the Watchdog will ignore feed errors. After writing 0xAA to WDFEED, access to any Watchdog register other than writing 0x55 to WDFEED causes an immediate reset/interrupt when the Watchdog is enabled, and sets the WDTOF flag. The reset will be generated during the second PCLK following an incorrect access to a Watchdog register during a feed sequence.

Table 346: Watchdog Feed register (WDFEED - 0x4000 4008) bit description

Bit	Symbol	Description	Reset value
7:0	Feed	Feed value should be 0xAA followed by 0x55.	-
31:8	-	Reserved	-

22.7.4 Watchdog Timer Value register

The WDTV register is used to read the current value of Watchdog timer counter.

When reading the value of the 24-bit counter, the lock and synchronization procedure takes up to 6 WDCLK cycles plus 6 PCLK cycles, so the value of WDTV is older than the actual value of the timer when it's being read by the CPU.

Table 347: Watchdog Timer Value register (WDTV - 0x4000 400C) bit description

Bit	Symbol	Description	Reset value
23:0	Count	Counter timer value.	0x00 00FF
31:24	-	Reserved. Read value is undefined, only zero should be written.	-

22.7.5 Watchdog Timer Warning Interrupt register

The WDWARNINT register determines the watchdog timer counter value that will generate a watchdog interrupt. When the watchdog timer counter matches the value defined by WDWARNINT, an interrupt will be generated after the subsequent WDCLK.

A match of the watchdog timer counter to WDWARNINT occurs when the bottom 10 bits of the counter have the same value as the 10 bits of WARNINT, and the remaining upper bits of the counter are all 0. This gives a maximum time of 1,023 watchdog timer counts (4,096 watchdog clocks) for the interrupt to occur prior to a watchdog event. If WARNINT is set to 0, the interrupt will occur at the same time as the watchdog event.

All information provided in this document is subject to legal disclaimers.
© NXP B.V. 2012. All rights reserved.

Table 348: Watchdog Timer Warning Interrupt register (WDWARNINT - 0x4000 4014) bit description

Bit	Symbol	Description	Reset value
9:0	WARNINT	Watchdog warning interrupt compare value.	0
31:10	-	Reserved. Read value is undefined, only zero should be written.	-

22.7.6 Watchdog Timer Window register

The WDWINDOW register determines the highest WDTV value allowed when a watchdog feed is performed. If a feed valid sequence completes prior to WDTV reaching the value in WDWINDOW, a watchdog event will occur.

WDWINDOW resets to the maximum possible WDTV value, so windowing is not in effect.

Table 349: Watchdog Timer Window register (WDWINDOW - 0x4000 4018) bit description

Bit	Symbol	Description	Reset value
23:0	WINDOW	Watchdog window value.	0xFF FFFF
31:24	-	Reserved. Read value is undefined, only zero should be written.	-

22.7.7 Watchdog timing examples

The following figures illustrate several aspects of Watchdog Timer operation.

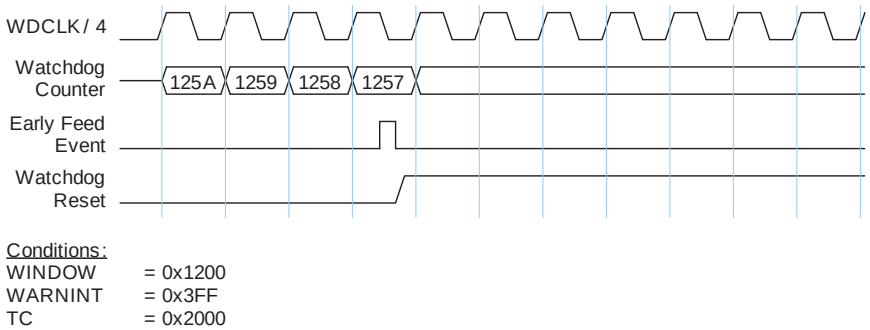

Fig 85. Early Watchdog Feed with Windowed Mode Enabled

All information provided in this document is subject to legal disclaimers.

© NXP B.V. 2012. All rights reserved.

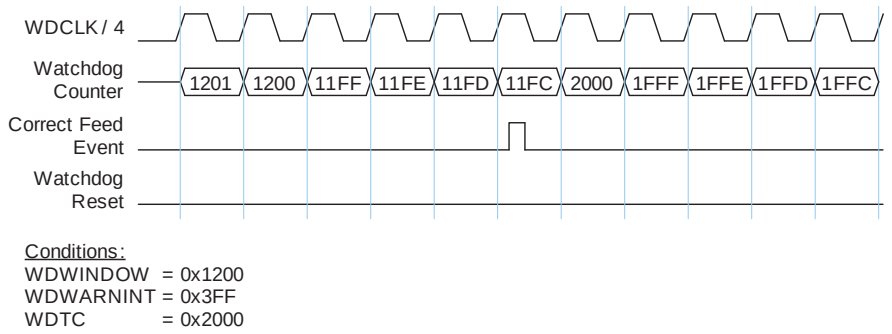

Fig 86. Correct Watchdog Feed with Windowed Mode Enabled

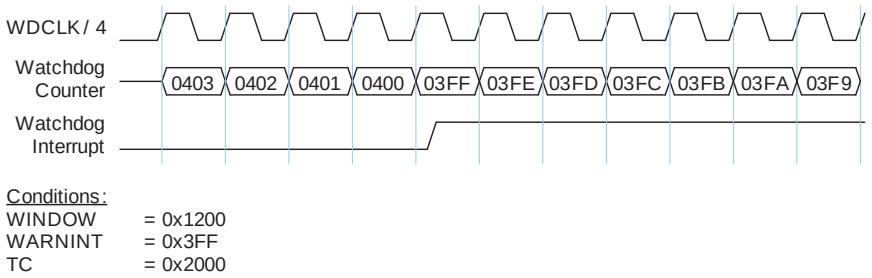

Fig 87. Watchdog Warning Interrupt

All information provided in this document is subject to legal disclaimers.

© NXP B.V. 2012. All rights reserved.

23.1 How to read this chapter

The WDT block (not windowed) is available for parts LPC111x and LPC11Cxx.

For parts LPC11Cxx only, a clock source lock feature is implemented whenever the WDT is enabled.

23.2 Basic configuration

The WDT is configured using the following registers:

1. Pins: The WDT uses no external pins.
2. Power: In the SYSAHBCLKCTRL register, set bit 15 (Table 21).
3. Peripheral clock: Select the watchdog clock source Table 25) and enable the WDT peripheral clock by writing to the WDTCLKDIV register (Table 27).

   Remark: The frequency of the watchdog oscillator is undefined after reset. The watchdog oscillator frequency must be programmed by writing to the WDTOSCCTRL register (see Table 13) before using the watchdog oscillator for the WDT.
4. Lock features: Once the watchdog timer is enabled by setting the WDEN bit in the WDMOD register, the following lock features are in effect:
   a. The WDEN bit cannot be changed to 0, that is the WDT cannot be disabled (LPC111x/101/201/301 and LPC11Cxx).
   b. The watch dog clock source cannot be changed. If the WDT is needed in Deep-sleep mode, select the watch dog oscillator as the clock source before setting the WDEN bit. (LPC11Cxx only).

23.3 Features

- Internally resets chip if not periodically reloaded.
- Debug mode.
- Enabled by software but requires a hardware reset or a Watchdog reset/interrupt to be disabled.
- Incorrect/Incomplete feed sequence causes reset/interrupt if enabled.
- Flag to indicate Watchdog reset.
- Programmable 24 bit timer with internal pre-scaler.
- Selectable time period from ($T_{WDCLK} \times 256 \times 4$) to ($T_{WDCLK} \times 2^{24} \times 4$) in multiples of $T_{WDCLK} \times 4$.
- The Watchdog clock (WDCLK) source is selected in the syscon block from the Internal RC oscillator (IRC), the main clock, or the Watchdog oscillator, see Table 25. This gives a wide range of potential timing choices for Watchdog operation under different power reduction conditions. For increased reliability, it also provides the ability to run the Watchdog timer from an entirely internal source that is not dependent on an external crystal and its associated components and wiring.

All information provided in this document is subject to legal disclaimers.
© NXP B.V. 2012. All rights reserved.

23.4 Applications

The purpose of the Watchdog is to reset the microcontroller within a reasonable amount of time if it enters an erroneous state. When enabled, the Watchdog will generate a system reset if the user program fails to feed (or reload) the Watchdog within a predetermined amount of time.

23.5 Description

The Watchdog consists of a divide by 4 fixed pre-scaler and a 24-bit counter. The clock is fed to the timer via a pre-scaler. The timer decrements when clocked. The minimum value from which the counter decrements is 0xFF. Setting a value lower than 0xFF causes 0xFF to be loaded in the counter. Hence the minimum Watchdog interval is ($T_{WDCLK} \times 256 \times 4$) and the maximum Watchdog interval is ($T_{WDCLK} \times 2^{24} \times 4$) in multiples of ($T_{WDCLK} \times 4$). The Watchdog should be used in the following manner:

1. Set the Watchdog timer constant reload value in WDTC register.
2. Setup the Watchdog timer operating mode in WDMOD register.
3. Enable the Watchdog by writing 0xAA followed by 0x55 to the WDFEED register.
4. The Watchdog should be fed again before the Watchdog counter underflows to prevent reset/interrupt.

When the Watchdog is in the reset mode and the counter underflows, the CPU will be reset, loading the stack pointer and program counter from the vector table as in the case of external reset. The Watchdog time-out flag (WDTOF) can be examined to determine if the Watchdog has caused the reset condition. The WDTOF flag must be cleared by software.

23.6 WDT clocking

The watchdog timer block uses two clocks: PCLK and WDCLK. PCLK is used for the APB accesses to the watchdog registers and is derived from the system clock (see Figure 8). The WDCLK is used for the watchdog timer counting and is derived from the wdt_clk in Figure 8. Several clocks can be used as a clock source for wdt_clk clock: the IRC, the watchdog oscillator, and the main clock. The clock source is selected in the syscon block (see Table 25). The WDCLK has its own clock divider (Section 3.5.20), which can also disable this clock.

There is some synchronization logic between these two clock domains. When the WDMOD and WDTC registers are updated by APB operations, the new value will take effect in 3 WDCLK cycles on the logic in the WDCLK clock domain. When the watchdog timer is counting on WDCLK, the synchronization logic will first lock the value of the counter on WDCLK and then synchronize it with the PCLK for reading as the WDTV register by the CPU.

Remark: The frequency of the watchdog oscillator is undefined after reset. The watchdog oscillator frequency must be programmed by writing to the WDTOSCCTRL register (see Table 13) before using the watchdog oscillator for the WDT.

All information provided in this document is subject to legal disclaimers.
© NXP B.V. 2012. All rights reserved.

23.7 Register description

The Watchdog contains four registers as shown in Table 350 below.

Table 350. Register overview: Watchdog timer (base address 0x4000 4000)

Name	Access	Address offset	Description	Reset Value[1]
WDMOD	R/W	0x000	Watchdog mode register. This register contains the basic mode and status of the Watchdog Timer.	0
WDTC	R/W	0x004	Watchdog timer constant register. This register determines the time-out value.	0xFF
WDFEED	WO	0x008	Watchdog feed sequence register. Writing 0xAA followed by 0x55 to this register reloads the Watchdog timer with the value contained in WDTC.	NA
WDTV	RO	0x00C	Watchdog timer value register. This register reads out the current value of the Watchdog timer.	0xFF

[1] Reset Value reflects the data stored in used bits only. It does not include reserved bits content.

23.7.1 Watchdog Mode register (WDMOD - 0x4000 0000)

The WDMOD register controls the operation of the Watchdog through the combination of WDEN and RESET bits. Note that a watchdog feed must be performed before any changes to the WDMOD register take effect.

Table 351. Watchdog Mode register (WDMOD - address 0x4000 4000) bit description

Bit	Symbol	Description	Reset Value
0	WDEN	WDEN Watchdog enable bit (Set Only). When 1, the watchdog timer is running. **Remark:** Setting this bit to one also locks the watchdog clock source. Once the watchdog timer is enabled, the watchdog timer clock source cannot be changed. If the watchdog timer is needed in Deep-sleep mode, the watchdog clock source must be changed to the watchdog oscillator before setting this bit to one. The clock source lock feature is not available on all parts, see Section 23.1).	0
1	WDRESET	WDRESET Watchdog reset enable bit (Set Only). When 1, a watchdog time-out will cause a chip reset.	0
2	WDTOF	WDTOF Watchdog time-out flag. Set when the watchdog timer times out, cleared by software.	0 (Only after POR and BOD reset)
3	WDINT	WDINT Watchdog interrupt flag (Read Only, not clearable by software).	0
7:4	-	Reserved, user software should not write ones to reserved bits. The value read from a reserved bit is not defined.	NA
31:8	-	reserved	-

Once the **WDEN** and/or **WDRESET** bits are set, they can not be cleared by software. Both flags are cleared by a reset or a Watchdog timer underflow.

WDTOF The Watchdog time-out flag is set when the Watchdog times out. This flag is cleared by software or a POR or Brown-Out-Detect reset.

All information provided in this document is subject to legal disclaimers.

© NXP B.V. 2012. All rights reserved.

WDINT The Watchdog interrupt flag is set when the Watchdog times out. This flag is cleared when any reset occurs. Once the watchdog interrupt is serviced, it can be disabled in the NVIC or the watchdog interrupt request will be generated indefinitely. The intent of the watchdog interrupt is to allow debugging watchdog activity without resetting the device when the watchdog overflows.

Watchdog reset or interrupt will occur any time the watchdog is running and has an operating clock source. Any clock source works in Sleep mode, and if a watchdog interrupt occurs in Sleep mode, it will wake up the device.

Table 352. Watchdog operating modes selection

WDEN	WDRESET	Mode of Operation
0	X (0 or 1)	Debug/Operate without the Watchdog running.
1	0	Watchdog interrupt mode: debug with the Watchdog interrupt but no WDRESET enabled. When this mode is selected, a watchdog counter underflow will set the WDINT flag and the Watchdog interrupt request will be generated. **Remark:** In interrupt mode, check the WDINT flag. If this flag is set, the interrupt is true and can be serviced by the interrupt routine. If this flag is not set, the interrupt should be ignored.
1	1	Watchdog reset mode: operate with the Watchdog interrupt and WDRESET enabled. When this mode is selected, a watchdog counter underflow will reset the microcontroller. Although the Watchdog interrupt is also enabled in this case (WDEN = 1) it will not be recognized since the watchdog reset will clear the WDINT flag.

23.7.2 Watchdog Timer Constant register (WDTC - 0x4000 4004)

The WDTC register determines the time-out value. Every time a feed sequence occurs the WDTC content is reloaded in to the Watchdog timer. It's a 32-bit register with 8 LSB set to 1 on reset. Writing values below 0xFF will cause 0x0000 00FF to be loaded to the WDTC. Thus the minimum time-out interval is $T_{WDCLK} \times 256 \times 4$.

Table 353. Watchdog Constant register (WDTC - address 0x4000 4004) bit description

Bit	Symbol	Description	Reset Value
23:0	Count	Watchdog time-out interval.	0x0000 00FF
31:25	-	Reserved	-

23.7.3 Watchdog Feed register (WDFEED - 0x4000 4008)

Writing 0xAA followed by 0x55 to this register will reload the Watchdog timer with the WDTC value. This operation will also start the Watchdog if it is enabled via the WDMOD register. Setting the WDEN bit in the WDMOD register is not sufficient to enable the Watchdog. A valid feed sequence must be completed after setting WDEN before the Watchdog is capable of generating a reset. Until then, the Watchdog will ignore feed errors. After writing 0xAA to WDFEED, access to any Watchdog register other than writing 0x55 to WDFEED causes an immediate reset/interrupt when the Watchdog is enabled. The reset will be generated during the second PCLK following an incorrect access to a Watchdog register during a feed sequence.

All information provided in this document is subject to legal disclaimers.
© NXP B.V. 2012. All rights reserved.

Interrupts should be disabled during the feed sequence. An abort condition will occur if an interrupt happens during the feed sequence.

Table 354. Watchdog Feed register (WDFEED - address 0x4000 4008) bit description

Bit	Symbol	Description	Reset Value
7:0	Feed	Feed value should be 0xAA followed by 0x55.	NA
31:8	-	Reserved	-

23.7.4 Watchdog Timer Value register (WDTV - 0x4000 400C)

The WDTV register is used to read the current value of Watchdog timer.

When reading the value of the 24-bit timer, the lock and synchronization procedure takes up to 6 WDCLK cycles plus 6 PCLK cycles, so the value of WDTV is older than the actual value of the timer when it's being read by the CPU.

Table 355. Watchdog Timer Value register (WDTV - address 0x4000 000C) bit description

Bit	Symbol	Description	Reset Value
23:0	Count	Counter timer value.	0x0000 00FF
31:24	-	Reserved	-

23.8 Block diagram

The block diagram of the Watchdog is shown below in the Figure 88. The synchronization logic (PCLK/WDCLK) is not shown in the block diagram.

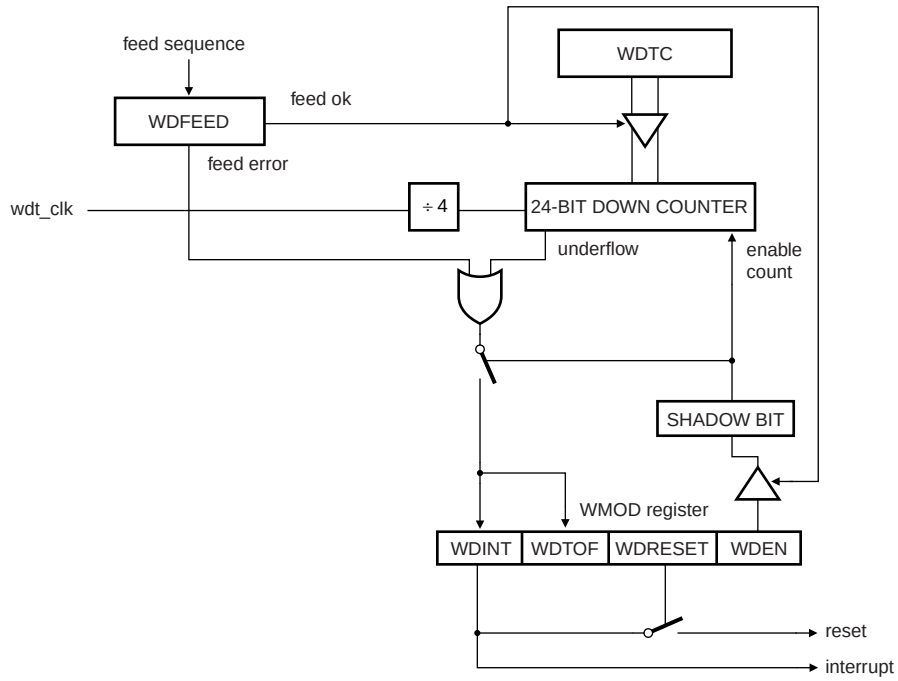

Fig 88. Watchdog block diagram

All information provided in this document is subject to legal disclaimers.
© NXP B.V. 2012. All rights reserved.

24.1 How to read this chapter

The system tick timer (SysTick timer) is part of the ARM Cortex-M0 core and is identical for all LPC111x, LPC11D14, and LPC11Cxx parts.

24.2 Basic configuration

The system tick timer is configured using the following registers:

1. Pins: The system tick timer uses no external pins.
2. Power: The system tick timer is enabled through the SysTick control register (Section 28.6.4.1). The system tick timer clock is fixed to half the frequency of the system clock.
3. Enable the clock source for the SysTick timer in the SYST_CSR register (Table 357).

24.3 Features

- Simple 24-bit timer.
- Uses dedicated exception vector.
- Clocked internally by the system clock or the system clock/2.

24.4 General description

The block diagram of the SysTick timer is shown below in the Figure 89.

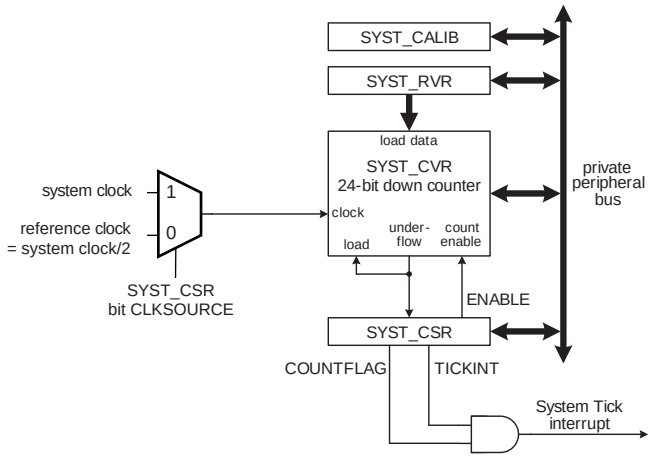

Fig 89. System tick timer block diagram

The SysTick timer is an integral part of the Cortex-M0. The SysTick timer is intended to generate a fixed 10 millisecond interrupt for use by an operating system or other system management software.

All information provided in this document is subject to legal disclaimers.
© NXP B.V. 2012. All rights reserved.

Since the SysTick timer is a part of the Cortex-M0, it facilitates porting of software by providing a standard timer that is available on Cortex-M0 based devices. The SysTick timer can be used for:

- An RTOS tick timer which fires at a programmable rate (for example 100 Hz) and invokes a SysTick routine.
- A high-speed alarm timer using the core clock.
- A simple counter. Software can use this to measure time to completion and time used.
- An internal clock source control based on missing/meeting durations. The COUNTFLAG bit-field in the control and status register can be used to determine if an action completed within a set duration, as part of a dynamic clock management control loop.

Refer to the *Cortex-M0 User Guide* for details.

24.5 Register description

The systick timer registers are located on the ARM Cortex-M0 private peripheral bus (see Figure 97), and are part of the ARM Cortex-M0 core peripherals. For details, see Section 28.6.4.

Table 356. Register overview: SysTick timer (base address 0xE000 E000)

Name	Access	Address offset	Description	Reset value[1]
SYST_CSR	R/W	0x010	System Timer Control and status register	0x000 0000
SYST_RVR	R/W	0x014	System Timer Reload value register	0
SYST_CVR	R/W	0x018	System Timer Current value register	0
SYST_CALIB	R/W	0x01C	System Timer Calibration value register	0x4

[1] Reset Value reflects the data stored in used bits only. It does not include content of reserved bits.

24.5.1 System Timer Control and status register

The SYST_CSR register contains control information for the SysTick timer and provides a status flag. This register is part of the ARM Cortex-M0 core system timer register block. For a bit description of this register, see Section 28.6.4 “System timer, SysTick”.

This register determines the clock source for the system tick timer.

All information provided in this document is subject to legal disclaimers. © NXP B.V. 2012. All rights reserved.

Table 357. SysTick Timer Control and status register (SYST_CSR - 0xE000 E010) bit description

Bit	Symbol	Description	Reset value
0	ENABLE	System Tick counter enable. When 1, the counter is enabled. When 0, the counter is disabled.	0
1	TICKINT	System Tick interrupt enable. When 1, the System Tick interrupt is enabled. When 0, the System Tick interrupt is disabled. When enabled, the interrupt is generated when the System Tick counter counts down to 0.	0
2	CLKSOURCE	System Tick clock source selection. When 1, the system clock (CPU) clock is selected. When 0, the system clock/2 is selected as the reference clock.	0
15:3	-	Reserved, user software should not write ones to reserved bits. The value read from a reserved bit is not defined.	NA
16	COUNTFLAG	Returns 1 if the SysTick timer counted to 0 since the last read of this register.	0
31:17	-	Reserved, user software should not write ones to reserved bits. The value read from a reserved bit is not defined.	NA

24.5.2 System Timer Reload value register

The SYST_RVR register is set to the value that will be loaded into the SysTick timer whenever it counts down to zero. This register is loaded by software as part of timer initialization. The SYST_CALIB register may be read and used as the value for SYST_RVR register if the CPU is running at the frequency intended for use with the SYST_CALIB value.

Table 358. System Timer Reload value register (SYST_RVR - 0xE000 E014) bit description

Bit	Symbol	Description	Reset value
23:0	RELOAD	This is the value that is loaded into the System Tick counter when it counts down to 0.	0
31:24	-	Reserved, user software should not write ones to reserved bits. The value read from a reserved bit is not defined.	NA

24.5.3 System Timer Current value register

The SYST_CVR register returns the current count from the System Tick counter when it is read by software.

Table 359. System Timer Current value register (SYST_CVR - 0xE000 E018) bit description

Bit	Symbol	Description	Reset value
23:0	CURRENT	Reading this register returns the current value of the System Tick counter. Writing any value clears the System Tick counter and the COUNTFLAG bit in STCTRL.	0
31:24	-	Reserved, user software should not write ones to reserved bits. The value read from a reserved bit is not defined.	NA

All information provided in this document is subject to legal disclaimers.
© NXP B.V. 2012. All rights reserved.

24.5.4 System Timer Calibration value register (SYST_CALIB - 0xE000 E01C)

The value of the SYST_CALIB register is driven by the value of the SYSTCKCAL register in the system configuration block (see Table 34).

Table 360. System Timer Calibration value register (SYST_CALIB - 0xE000 E01C) bit description

Bit	Symbol	Value	Description	Reset value
23:0	TENMS		See Table 461.	0x4
29:24	-		Reserved, user software should not write ones to reserved bits. The value read from a reserved bit is not defined.	NA
30	SKEW		See Table 461.	0
31	NOREF		See Table 461.	0

24.6 Functional description

The SysTick timer is a 24-bit timer that counts down to zero and generates an interrupt. The intent is to provide a fixed 10 millisecond time interval between interrupts. The SysTick timer is clocked from the CPU clock (the system clock, see Figure 8) or from the reference clock, which is fixed to half the frequency of the CPU clock. In order to generate recurring interrupts at a specific interval, the SYST_RVR register must be initialized with the correct value for the desired interval. A default value is provided in the SYST_CALIB register and may be changed by software. The default value gives a 10 millisecond interrupt rate if the CPU clock is set to 50 MHz.

24.7 Example timer calculations

To use the system tick timer, do the following:

1. Program the SYST_RVR register with the reload value RELOAD to obtain the desired time interval.
2. Clear the SYST_CVR register by writing to it. This ensures that the timer will count from the SYST_RVR value rather than an arbitrary value when the timer is enabled.
3. Program the SYST_SCR register with the value 0x7 which enables the SysTick timer and the SysTick timer interrupt.

The following example illustrates selecting the SysTick timer reload value to obtain a 10 ms time interval with the LPC111x/LPC11Cxx system clock set to 50 MHz.

Example (system clock = 50 MHz)

The system tick clock = system clock = 50 MHz. Bit CLKSOURCE in the SYST_CSR register set to 1 (system clock).

RELOAD = (system tick clock frequency $\times$ 10 ms) -1 = (50 MHz $\times$ 10 ms) -1 = 500000 -1 = 499999 = 0x0007A11F.

All information provided in this document is subject to legal disclaimers.
© NXP B.V. 2012. All rights reserved.

25.1 How to read this chapter

The ADC block is identical for all LPC111x, LPC11D14, and LPC11Cxx parts.

All HVQFN33 and LQFP48 packages support eight ADC channels. On the small packages (TSSOP28/DIP28/TSSOP20/SO20), only five or six ADC channels are pinned out (see Table 3).

25.2 Basic configuration

The ADC is configured using the following registers:

1. Pins: The ADC pin functions are configured in the IOCONFIG register block (Section 7.4).
2. Power and peripheral clock: In the SYSAHBCLKCTRL register, set bit 13 (Table 21). Power to the ADC at run-time is controlled through the PDRUNCFG register (Table 43).

Remark: Basic clocking for the A/D converters is determined by the APB clock (PCLK). A programmable divider is included in the A/D converter to scale this clock to the 4.5 MHz (max) clock needed by the successive approximation process. An accurate conversion requires 11 clock cycles.

25.3 Features

- 10-bit successive approximation Analog-to-Digital Converter (ADC).
- Input multiplexing among 8 pins.
- Power-down mode.
- Measurement range 0 to 3.6 V. Do not exceed the V_{DD} voltage level.
- 10-bit conversion time $\geq$ 2.44 μs.
- Burst conversion mode for single or multiple inputs.
- Optional conversion on transition on input pin or Timer Match signal.
- Individual result registers for each A/D channel to reduce interrupt overhead.

25.4 Pin description

Table 361 gives a brief summary of the ADC related pins.

All information provided in this document is subject to legal disclaimers.
© NXP B.V. 2012. All rights reserved.

Table 361. ADC pin description

Pin	Type	Description
AD[7:0]	Input	**Analog Inputs.** The A/D converter cell can measure the voltage on any of these input signals. **Remark:** While the pins are 5 V tolerant in digital mode, the maximum input voltage must not exceed V_{DD} when the pins are configured as analog inputs.
V_{DD}	Input	V_{REF}; Reference voltage.

The ADC function must be selected via the IOCON registers in order to get accurate voltage readings on the monitored pin. For a pin hosting an ADC input, it is not possible to have a have a digital function selected and yet get valid ADC readings. An inside circuit disconnects ADC hardware from the associated pin whenever a digital function is selected on that pin.

25.5 Register description

The ADC contains registers organized as shown in Table 362.

Table 362. Register overview: ADC (base address 0x4001 C000)

Name	Access	Address offset	Description	Reset Value[1]
AD0CR	R/W	0x000	A/D Control Register. The AD0CR register must be written to select the operating mode before A/D conversion can occur.	0x0000 0000
AD0GDR	R/W	0x004	A/D Global Data Register. Contains the result of the most recent A/D conversion.	NA
-	-	0x008	Reserved.	-
AD0INTEN	R/W	0x00C	A/D Interrupt Enable Register. This register contains enable bits that allow the DONE flag of each A/D channel to be included or excluded from contributing to the generation of an A/D interrupt.	0x0000 0100
AD0DR0	R/W	0x010	A/D Channel 0 Data Register. This register contains the result of the most recent conversion completed on channel 0	NA
AD0DR1	R/W	0x014	A/D Channel 1 Data Register. This register contains the result of the most recent conversion completed on channel 1.	NA
AD0DR2	R/W	0x018	A/D Channel 2 Data Register. This register contains the result of the most recent conversion completed on channel 2.	NA
AD0DR3	R/W	0x01C	A/D Channel 3 Data Register. This register contains the result of the most recent conversion completed on channel 3.	NA
AD0DR4	R/W	0x020	A/D Channel 4 Data Register. This register contains the result of the most recent conversion completed on channel 4.	NA
AD0DR5	R/W	0x024	A/D Channel 5 Data Register. This register contains the result of the most recent conversion completed on channel 5.	NA
AD0DR6	R/W	0x028	A/D Channel 6 Data Register. This register contains the result of the most recent conversion completed on channel 6.	NA
AD0DR7	R/W	0x02C	A/D Channel 7 Data Register. This register contains the result of the most recent conversion completed on channel 7.	NA
AD0STAT	RO	0x030	A/D Status Register. This register contains DONE and OVERRUN flags for all of the A/D channels, as well as the A/D interrupt flag.	0

[1] Reset Value reflects the data stored in used bits only. It does not include reserved bits content.

All information provided in this document is subject to legal disclaimers.

© NXP B.V. 2012. All rights reserved.

25.5.1 A/D Control Register (AD0CR - 0x4001 C000)

The A/D Control Register provides bits to select A/D channels to be converted, A/D timing, A/D modes, and the A/D start trigger.

Table 363. A/D Control Register (AD0CR - address 0x4001 C000) bit description

Bit	Symbol	Value	Description	Reset Value
7:0	SEL		Selects which of the AD7:0 pins is (are) to be sampled and converted. Bit 0 selects Pin AD0, bit 1 selects pin AD1,..., and bit 7 selects pin AD7. In software-controlled mode (BURST = 0), only one channel can be selected, i.e. only one of these bits should be 1. In hardware scan mode (BURST = 1), any numbers of channels can be selected, i.e any or all bits can be set to 1. If all bits are set to 0, channel 0 is selected automatically (SEL = 0x01).	0x00
15:8	CLKDIV		The APB clock (PCLK) is divided by CLKDIV +1 to produce the clock for the ADC, which should be less than or equal to 4.5 MHz. Typically, software should program the smallest value in this field that yields a clock of 4.5 MHz or slightly less, but in certain cases (such as a high-impedance analog source) a slower clock may be desirable.	0
16	BURST		Burst mode **Remark:** If BURST is set to 1, the ADGINTEN bit in the AD0INTEN register (Table 365) must be set to 0.	0
		0	Software-controlled mode: Conversions are software-controlled and require 11 clocks.	
		1	Hardware scan mode: The AD converter does repeated conversions at the rate selected by the CLKS field, scanning (if necessary) through the pins selected by 1s in the SEL field. The first conversion after the start corresponds to the least-significant bit set to 1 in the SEL field, then the next higher bits (pins) set to 1 are scanned if applicable. Repeated conversions can be terminated by clearing this bit, but the conversion in progress when this bit is cleared will be completed. **Important:** START bits must be 000 when BURST = 1 or conversions will not start.	
19:17	CLKS		This field selects the number of clocks used for each conversion in Burst mode, and the number of bits of accuracy of the result in the LS bits of ADDR, between 11 clocks (10 bits) and 4 clocks (3 bits).	000
		0x0	11 clocks / 10 bits	
		0x1	10 clocks / 9 bits	
		0x2	9 clocks / 8 bits	
		0x3	8 clocks / 7 bits	
		0x4	7 clocks / 6 bits	
		0x5	6 clocks / 5 bits	
		0x6	5 clocks / 4 bits	
		0x7	4 clocks / 3 bits	
23:20	-		Reserved, user software should not write ones to reserved bits. The value read from a reserved bit is not defined.	NA

All information provided in this document is subject to legal disclaimers.

© NXP B.V. 2012. All rights reserved.

Table 363. A/D Control Register (AD0CR - address 0x4001 C000) bit description

Bit	Symbol	Value	Description	Reset Value
26:24	START		When the BURST bit is 0, these bits control whether and when an A/D conversion is started:	0
		0x0	No start (this value should be used when clearing PDN to 0).	
		0x1	Start conversion now.	
		0x2	Start conversion when the edge selected by bit 27 occurs on PIO0_2/SSEL/CT16B0_CAP0.	
		0x3	Start conversion when the edge selected by bit 27 occurs on PIO1_5/DIR/CT32B0_CAP0.	
		0x4	Start conversion when the edge selected by bit 27 occurs on CT32B0_MAT0[1].	
		0x5	Start conversion when the edge selected by bit 27 occurs on CT32B0_MAT1[1].	
		0x6	Start conversion when the edge selected by bit 27 occurs on CT16B0_MAT0[1].	
		0x7	Start conversion when the edge selected by bit 27 occurs on CT16B0_MAT1[1].	
27	EDGE		This bit is significant only when the START field contains 010-111. In these cases:	0
		0	Start conversion on a rising edge on the selected CAP/MAT signal.	
		1	Start conversion on a falling edge on the selected CAP/MAT signal.	
31:28	-		Reserved, user software should not write ones to reserved bits. The value read from a reserved bit is not defined.	NA

[1] Note that this does not require that the timer match function appear on a device pin.

25.5.2 A/D Global Data Register (AD0GDR - 0x4001 C004)

The A/D Global Data Register contains the result of the most recent A/D conversion. This includes the data, DONE, and Overrun flags, and the number of the A/D channel to which the data relates.

Table 364. A/D Global Data Register (AD0GDR - address 0x4001 C004) bit description

Bit	Symbol	Description	Reset Value
5:0	-	Reserved. These bits always read as zeroes.	0
15:6	V_VREF	When DONE is 1, this field contains a binary fraction representing the voltage on the ADn pin selected by the SEL field, divided by the voltage on the V_{DD} pin. Zero in the field indicates that the voltage on the ADn pin was less than, equal to, or close to that on V_{SS}, while 0x3FF indicates that the voltage on ADn was close to, equal to, or greater than that on V_{REF}.	X
23:16	-	Reserved. These bits always read as zeroes.	0
26:24	CHN	These bits contain the channel from which the result bits V_VREF were converted.	X
29:27	-	Reserved. These bits always read as zeroes.	0
30	OVERRUN	This bit is 1 in burst mode if the results of one or more conversions was (were) lost and overwritten before the conversion that produced the result in the V_VREF bits.	0
31	DONE	This bit is set to 1 when an A/D conversion completes. It is cleared when this register is read and when the ADCR is written. If the ADCR is written while a conversion is still in progress, this bit is set and a new conversion is started.	0

All information provided in this document is subject to legal disclaimers.

© NXP B.V. 2012. All rights reserved.

25.5.3 A/D Interrupt Enable Register (AD0INTEN - 0x4001 C00C)

This register allows control over which A/D channels generate an interrupt when a conversion is complete. For example, it may be desirable to use some A/D channels to monitor sensors by continuously performing conversions on them. The most recent results are read by the application program whenever they are needed. In this case, an interrupt is not desirable at the end of each conversion for some A/D channels.

Table 365. A/D Interrupt Enable Register (AD0INTEN - address 0x4001 C00C) bit description

Bit	Symbol	Description	Reset Value
7:0	ADINTEN	These bits allow control over which A/D channels generate interrupts for conversion completion. When bit 0 is one, completion of a conversion on A/D channel 0 will generate an interrupt, when bit 1 is one, completion of a conversion on A/D channel 1 will generate an interrupt, etc.	0x00
8	ADGINTEN	When 1, enables the global DONE flag in ADDR to generate an interrupt. When 0, only the individual A/D channels enabled by ADINTEN 7:0 will generate interrupts. **Remark:** This bit must be set to 0 in burst mode (BURST = 1 in the AD0CR register).	1
31:9	-	Reserved. Unused, always 0.	0

25.5.4 A/D Data Registers (AD0DR0 to AD0DR7 - 0x4001 C010 to 0x4001 C02C)

The A/D Data Register hold the result when an A/D conversion is complete, and also include the flags that indicate when a conversion has been completed and when a conversion overrun has occurred.

Table 366. A/D Data Registers (AD0DR0 to AD0DR7 - addresses 0x4001 C010 to 0x4001 C02C) bit description

Bit	Symbol	Description	Reset Value
5:0	-	Reserved.	0
15:6	V_VREF	When DONE is 1, this field contains a binary fraction representing the voltage on the ADn pin, divided by the voltage on the V_{REF} pin. Zero in the field indicates that the voltage on the ADn pin was less than, equal to, or close to that on V_{REF}, while 0x3FF indicates that the voltage on AD input was close to, equal to, or greater than that on V_{REF}.	NA
29:16	-	Reserved.	0
30	OVERRUN	This bit is 1 in burst mode if the results of one or more conversions was (were) lost and overwritten before the conversion that produced the result in the V_VREF bits.This bit is cleared by reading this register.	0
31	DONE	This bit is set to 1 when an A/D conversion completes. It is cleared when this register is read.	0

All information provided in this document is subject to legal disclaimers.

© NXP B.V. 2012. All rights reserved.

25.5.5 A/D Status Register (AD0STAT - 0x4001 C030)

The A/D Status register allows checking the status of all A/D channels simultaneously. The DONE and OVERRUN flags appearing in the ADDRn register for each A/D channel are mirrored in ADSTAT. The interrupt flag (the logical OR of all DONE flags) is also found in ADSTAT.

Table 367. A/D Status Register (AD0STAT - address 0x4001 C030) bit description

Bit	Symbol	Description	Reset Value
7:0	DONE	These bits mirror the DONE status flags that appear in the result register for each A/D channel n.	0
15:8	OVERRUN	These bits mirror the OVERRRUN status flags that appear in the result register for each A/D channel n. Reading ADSTAT allows checking the status of all A/D channels simultaneously.	0
16	ADINT	This bit is the A/D interrupt flag. It is one when any of the individual A/D channel Done flags is asserted and enabled to contribute to the A/D interrupt via the ADINTEN register.	0
31:17	-	Reserved. Unused, always 0.	0

25.6 Operation

25.6.1 Hardware-triggered conversion

If the BURST bit in the ADCR0 is 0 and the START field contains 010-111, the A/D converter will start a conversion when a transition occurs on a selected pin or timer match signal.

25.6.2 Interrupts

An interrupt is requested to the interrupt controller when the ADINT bit in the ADSTAT register is 1. The ADINT bit is one when any of the DONE bits of A/D channels that are enabled for interrupts (via the ADINTEN register) are one. Software can use the Interrupt Enable bit in the interrupt controller that corresponds to the ADC to control whether this results in an interrupt. The result register for an A/D channel that is generating an interrupt must be read in order to clear the corresponding DONE flag.

25.6.3 Accuracy vs. digital receiver

While the A/D converter can be used to measure the voltage on any ADC input pin, regardless of the pin's setting in the IOCON block, selecting the ADC in the IOCON registers function improves the conversion accuracy by disabling the pin's digital receiver (see also Section 7.3.4).

All information provided in this document is subject to legal disclaimers.

© NXP B.V. 2012. All rights reserved.

26.1 How to read this chapter

See Table 368 for different flash configurations.

Table 368. LPC111x/LPC11Cx flash configurations

Type number	Flash	Configuration	Page erase IAP command supported	ISP via UART	ISP via C_CAN
LPC1111FDH20/002	8 kB	Table 369	no	yes	no
LPC1111FHN33/101	8 kB	Table 369	no	yes	no
LPC1111FHN33/102	8 kB	Table 369	no	yes	no
LPC1111FHN33/103	8 kB	Table 370	yes	yes	no
LPC1111FHN33/201	8 kB	Table 369	no	yes	no
LPC1111FHN33/202	8 kB	Table 369	no	yes	no
LPC1111FHN33/203	8 kB	Table 370	yes	yes	no
LPC1112FD20/102	16 kB	Table 369	no	yes	no
LPC1112FDH20/102	16 kB	Table 369	no	yes	no
LPC1112FDH28/102	16 kB	Table 369	no	yes	no
LPC1112FHN33/101	16 kB	Table 369	no	yes	no
LPC1112FHN33/102	16 kB	Table 369	no	yes	no
LPC1112FHN33/103	16 kB	Table 370	yes	yes	no
LPC1112FHN33/201	16 kB	Table 369	no	yes	no
LPC1112FHN24/202	16 kB	Table 369	no	yes	no
LPC1112FHN33/202	16 kB	Table 369	no	yes	no
LPC1112FHN33/203	16 kB	Table 370	yes	yes	no
LPC1112FHI33/202	16 kB	Table 369	no	yes	no
LPC1112FHI33/203	16 kB	Table 370	yes	yes	no
LPC1113FHN33/201	24 kB	Table 369	no	yes	no
LPC1113FHN33/202	24 kB	Table 369	no	yes	no
LPC1113FHN33/203	24 kB	Table 370	yes	yes	no
LPC1113FHN33/301	24 kB	Table 369	no	yes	no
LPC1113FHN33/302	24 kB	Table 369	no	yes	no
LPC1113FHN33/303	24 kB	Table 370	yes	yes	no
LPC1113FBD48/301	24 kB	Table 369	no	yes	no
LPC1113FBD48/302	24 kB	Table 369	no	yes	no
LPC1113FBD48/303	24 kB	Table 370	yes	yes	no
LPC1114FDH28/102	32 kB	Table 369	no	yes	no
LPC1114FN28/102	32 kB	Table 369	no	yes	no
LPC1114FHN33/201	32 kB	Table 369	no	yes	no
LPC1114FHN33/202	32 kB	Table 369	no	yes	no
LPC1114FHN33/203	32 kB	Table 370	yes	yes	no
LPC1114FHN33/301	32 kB	Table 369	no	yes	no

All information provided in this document is subject to legal disclaimers.
© NXP B.V. 2012. All rights reserved.

Table 368. LPC111x/LPC11Cx flash configurations

Type number	Flash	Configuration	Page erase IAP command supported	ISP via UART	ISP via C_CAN
LPC1114FHN33/302	32 kB	Table 369	no	yes	no
LPC1114FHN33/303	32 kB	Table 370	yes	yes	no
LPC1114FHN33/333	56 kB	Table 370	yes	yes	no
LPC1114FHI33/302	32 kB	Table 369	no	yes	no
LPC1114FHI33/303	32 kB	Table 370	yes	yes	no
LPC1114FBD48/301	32 kB	Table 369	no	yes	no
LPC1114FBD48/302	32 kB	Table 369	no	yes	no
LPC1114FBD48/303	32 kB	Table 370	yes	yes	no
LPC1114FBD48/323	48 kB	Table 370	yes	yes	no
LPC1114FBD48/333	56 kB	Table 370	yes	yes	no
LPC1115FBD48/303	64 kB	Table 370	yes	yes	no
LPC11D14	32 kB	Table 369	no	yes	no
LPC11C12/C22	16 kB	Table 369	no	yes	yes
LPC11C14/C24	32 kB	Table 369	no	yes	yes

Remark: In addition to the ISP and IAP commands, a register in the flash controller block can be accessed to configure flash memory access times, see Section 26.9.

26.2 Features

- In-System Programming: In-System programming (ISP) is programming or reprogramming the on-chip flash memory, using the bootloader software and UART serial port or the C_CAN interface. This can be done when the part resides in the end-user board.
- In-Application Programming: In-Application (IAP) programming is performing erase and write operation on the on-chip flash memory, as directed by the end-user application code.
- Flash access times can be configured through a register in the flash controller block.
- Erase time for one sector is 100 ms ± 5%. Programming time for one block of 256 bytes is 1 ms ± 5%.

26.3 General description

26.3.1 Bootloader

The bootloader controls initial operation after reset and also provides the means to accomplish programming of the flash memory via UART or C_CAN. This could be initial programming of a blank device, erasure and re-programming of a previously programmed device, or programming of the flash memory by the application program in a running system.

All information provided in this document is subject to legal disclaimers.
© NXP B.V. 2012. All rights reserved.

The bootloader code is executed every time the part is powered on or reset. The loader can execute the ISP command handler or the user application code. A LOW level after reset at the PIO0_1 pin is considered as an external hardware request to start the ISP command handler either via UART or C_CAN, if present.

Remark: SRAM location 0x1000 0000 to 0x1000 0050 is not used by the bootloader and the memory content in this area is retained during reset. SRAM memory is not retained when the part powers down or enters Deep power-down mode.

If the C_CAN interface is present (LPC11Cx parts), the state of pin PIO0_3 at reset together with a LOW level on pin PIO0_1 determines whether UART ISP or C_CAN ISP routines are called:

- If PIO0_3 is LOW, the bootloader configures the C_CAN interface and calls the C_CAN ISP command handler.
- PIO0_3 is HIGH, the bootloader configures the UART serial port and calls the UART ISP command handler (this is the default).

Remark: On parts without C_CAN interface, the state of pin PIO0_3 does not matter.

Assuming that power supply pins are on their nominal levels when the rising edge on $\overline{\text{RESET}}$ pin is generated, it may take up to 3 ms before PIO0_1 is sampled and the decision whether to continue with user code or ISP handler is made. If PIO0_1 is sampled low and the watchdog overflow flag is set, the external hardware request to start the ISP command handler is ignored. If there is no request for the ISP command handler execution (PIO0_1 is sampled HIGH after reset), a search is made for a valid user program. If a valid user program is found then the execution control is transferred to it. If a valid user program is not found, the auto-baud routine is invoked.

Remark: The sampling of pin PIO0_1 can be disabled through programming flash location 0x0000 02FC (see Section 26.3.8.1).

26.3.2 Memory map after any reset

The boot block is 16 kB in size. The boot block is located in the memory region starting from the address 0x1FFF 0000. The bootloader is designed to run from this memory area, but both the ISP and IAP software use parts of the on-chip RAM. The RAM usage is described later in this chapter. The interrupt vectors residing in the boot block of the on-chip flash memory also become active after reset, i.e., the bottom 512 bytes of the boot block are also visible in the memory region starting from the address 0x0000 0000.

26.3.3 Criterion for Valid User Code

Criterion for valid user code: The reserved Cortex-M0 exception vector location 7 (offset 0x 0000 001C in the vector table) should contain the 2's complement of the check-sum of table entries 0 through 6. This causes the checksum of the first 8 table entries to be 0. The bootloader code checksums the first 8 locations in sector 0 of the flash. If the result is 0, then execution control is transferred to the user code.

If the signature is not valid, the auto-baud routine synchronizes with the host via serial port 0. The host should send a '?' (0x3F) as a synchronization character and wait for a response. The host side serial port settings should be 8 data bits, 1 stop bit and no parity. The auto-baud routine measures the bit time of the received synchronization character in terms of its own frequency and programs the baud rate generator of the serial port. It also

All information provided in this document is subject to legal disclaimers. © NXP B.V. 2012. All rights reserved.

sends an ASCII string ("Synchronized<CR><LF>") to the host. In response to this host should send the same string ("Synchronized<CR><LF>"). The auto-baud routine looks at the received characters to verify synchronization. If synchronization is verified then "OK<CR><LF>" string is sent to the host. The host should respond by sending the crystal frequency (in kHz) at which the part is running. For example, if the part is running at 10 MHz, the response from the host should be "10000<CR><LF>". "OK<CR><LF>" string is sent to the host after receiving the crystal frequency. If synchronization is not verified then the auto-baud routine waits again for a synchronization character. For auto-baud to work correctly in case of user invoked ISP, the CCLK frequency should be greater than or equal to 10 MHz.

Once the crystal frequency is received the part is initialized and the ISP command handler is invoked. For safety reasons an "Unlock" command is required before executing the commands resulting in flash erase/write operations and the "Go" command. The rest of the commands can be executed without the unlock command. The Unlock command is required to be executed once per ISP session. The Unlock command is explained in Section 26.5 “UART ISP commands” on page 416.

All information provided in this document is subject to legal disclaimers.
© NXP B.V. 2012. All rights reserved.

26.3.4 Boot process flowchart

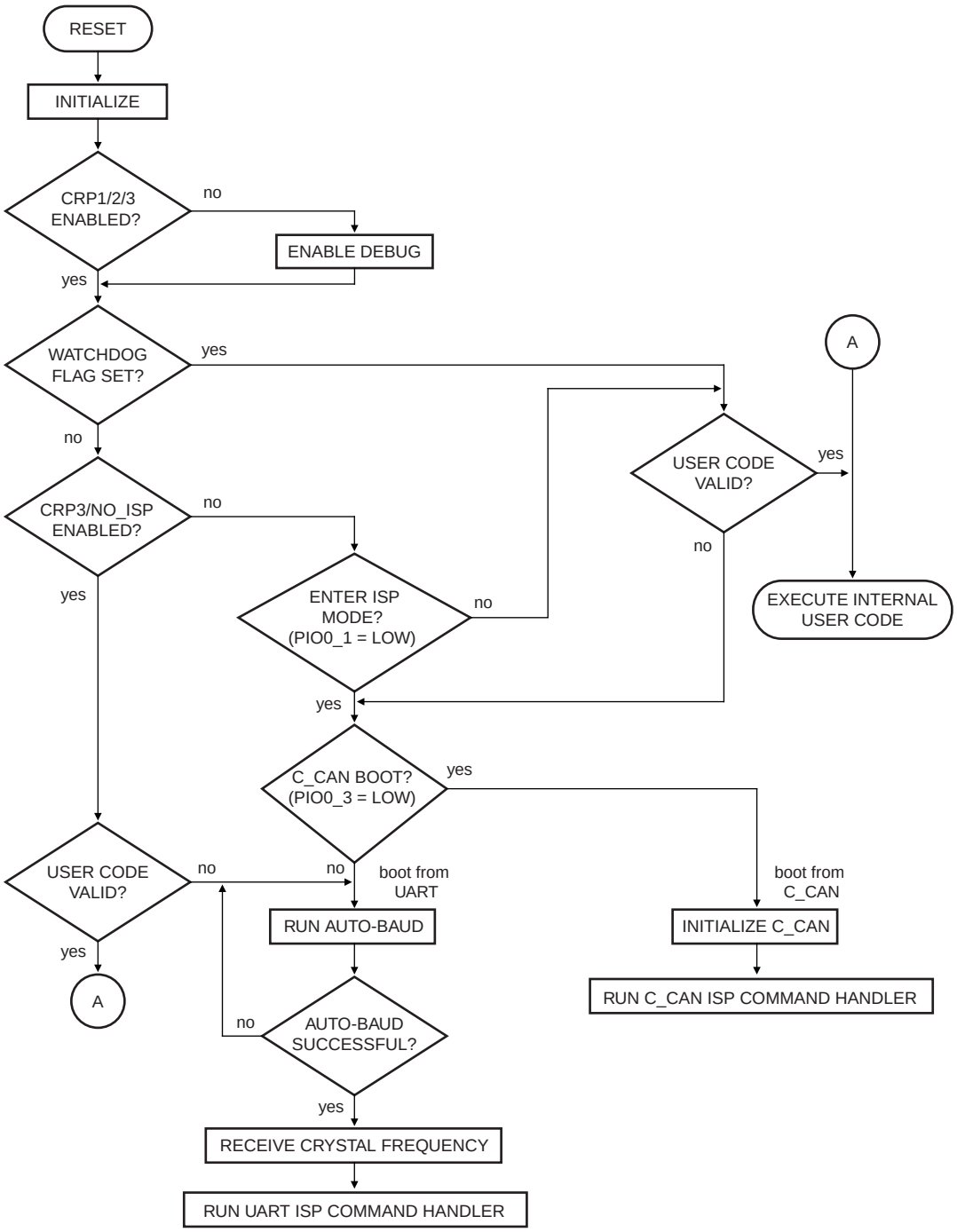

(1) For details on handling the crystal frequency, see Section 26.7.8 “Reinvoke ISP (IAP)” on page 435

Fig 90. Boot process flowchart

All information provided in this document is subject to legal disclaimers.

© NXP B.V. 2012. All rights reserved.

26.3.5 Flash configuration for LPC1100, LPC1100C, LPC1100L series

Some IAP and ISP commands operate on sectors and specify sector numbers. The following table shows the correspondence between sector numbers and memory addresses for LPC111x/LPC11Cxx devices.

Table 369. LPC111x flash configuration (LPC1100, LPC1100L, LPC1100C series)

Sector number	Sector size [kB]	Address range	LPC1111 (8 kB flash)	LPC1112/ LPC11C12/ LPC11C22 (16 kB flash)	LPC1113 (24 kB flash)	LPC1114/ LPC11C14/ LPC11C24 (32 kB flash)
0	4	0x0000 0000 - 0x0000 0FFF	yes	yes	yes	yes
1	4	0x0000 1000 - 0x0000 1FFF	yes	yes	yes	yes
2	4	0x0000 2000 - 0x0000 2FFF	-	yes	yes	yes
3	4	0x0000 3000 - 0x0000 3FFF	-	yes	yes	yes
4	4	0x0000 4000 - 0x0000 4FFF	-	-	yes	yes
5	4	0x0000 5000 - 0x0000 5FFF	-	-	yes	yes
6	4	0x0000 6000 - 0x0000 6FFF	-	-	-	yes
7	4	0x0000 7000 - 0x0000 7FFF		-	-	yes

26.3.6 Flash configuration for LPC1100XL series

Some IAP and ISP commands operate on sectors and specify sector numbers. In addition, parts in the LPC1100XL series support a page erase command. The following table shows the correspondence between page numbers, sector numbers, and memory addresses for LPC1100XL devices.

The size of a sector is 4 kB, the size of a page is 256 Byte. One sector contains 16 pages.

Table 370. LPC1100XL flash configuration

Sector number	Sector size [kB]	Page number	Address range	LPC1111 (8 kB flash)	LPC1112 (16 kB flash)	LPC1113 (24 kB flash)	LPC1114/203/303 (32 kB flash)	LPC1114/323 (48 kB flash)	LPC1114/333 (56 kB flash)	LPC1115 (64 kB flash)
0	4	0 -15	0x0000 0000 - 0x0000 0FFF	yes	yes	yes	yes	yes	yes	yes
1	4	16 - 31	0x0000 1000 - 0x0000 1FFF	yes	yes	yes	yes	yes	yes	yes
2	4	32 - 47	0x0000 2000 - 0x0000 2FFF	-	yes	yes	yes	yes	yes	yes
3	4	48 - 63	0x0000 3000 - 0x0000 3FFF	-	yes	yes	yes	yes	yes	yes
4	4	64 - 79	0x0000 4000 - 0x0000 4FFF	-	-	yes	yes	yes	yes	yes
5	4	80 - 95	0x0000 5000 - 0x0000 5FFF	-	-	yes	yes	yes	yes	yes
6	4	96 - 111	0x0000 6000 - 0x0000 6FFF	-	-	-	yes	yes	yes	yes
7	4	112 - 127	0x0000 7000 - 0x0000 7FFF	-	-	-	yes	yes	yes	yes
8	4	128 - 143	0x0000 8000 - 0x0000 8FFF	-	-	-	-	yes	yes	yes
9	4	144 - 159	0x0000 9000 - 0x0000 9FFF	-	-	-	-	yes	yes	yes
10	4	160 - 175	0x0000 A000 - 0x0000 AFFF	-	-	-	-	yes	yes	yes
11	4	176 - 191	0x0000 B000 - 0x0000 BFFF	-	-	-	-	yes	yes	yes

All information provided in this document is subject to legal disclaimers.
© NXP B.V. 2012. All rights reserved.

Table 370. LPC1100XL flash configuration

Sector number	Sector size [kB]	Page number	Address range	LPC1111 (8 kB flash)	LPC1112 (16 kB flash)	LPC1113 (24 kB flash)	LPC1114/203/303 (32 kB flash)	LPC1114/323 (48 kB flash)	LPC1114/333 (56 kB flash)	LPC1115 (64 kB flash)
12	4	192 - 207	0x0000 C000 - 0x0000 CFFF	-	-	-	-	-	yes	yes
13	4	208 - 223	0x0000 D000 - 0x0000 DFFF	-	-	-	-	-	yes	yes
14	4	224 - 239	0x0000 E000 - 0x0000 EFFF	-	-	-	-	-	-	yes
15	4	240 - 255	0x0000 F000 - 0x0000 FFFF	-	-	-	-	-	-	yes

26.3.7 Flash content protection mechanism

The LPC111x/LPC11C1x is equipped with the Error Correction Code (ECC) capable Flash memory. The purpose of an error correction module is twofold. Firstly, it decodes data words read from the memory into output data words. Secondly, it encodes data words to be written to the memory. The error correction capability consists of single bit error correction with Hamming code.

The operation of ECC is transparent to the running application. The ECC content itself is stored in a flash memory not accessible by user's code to either read from it or write into it on its own. A byte of ECC corresponds to every consecutive 128 bits of the user accessible Flash. Consequently, Flash bytes from 0x0000 0000 to 0x0000 000F are protected by the first ECC byte, Flash bytes from 0x0000 0010 to 0x0000 001F are protected by the second ECC byte, etc.

Whenever the CPU requests a read from user's Flash, both 128 bits of raw data containing the specified memory location and the matching ECC byte are evaluated. If the ECC mechanism detects a single error in the fetched data, a correction will be applied before data are provided to the CPU. When a write request into the user's Flash is made, write of user specified content is accompanied by a matching ECC value calculated and stored in the ECC memory.

When a sector of Flash memory is erased, the corresponding ECC bytes are also erased. Once an ECC byte is written, it can not be updated unless it is erased first. Therefore, for the implemented ECC mechanism to perform properly, data must be written into the flash memory in groups of 16 bytes (or multiples of 16), aligned as described above.

26.3.8 Code Read Protection (CRP)

Code Read Protection is a mechanism that allows the user to enable different levels of security in the system so that access to the on-chip flash and use of the ISP can be restricted. When needed, CRP is invoked by programming a specific pattern in flash location at 0x0000 02FC. IAP commands are not affected by the code read protection.

Important: any CRP change becomes effective only after the device has gone through a power cycle.

All information provided in this document is subject to legal disclaimers.
© NXP B.V. 2012. All rights reserved.

Table 371. Code Read Protection options

Name	Pattern programmed in 0x0000 02FC	Description
NO_ISP	0x4E69 7370	Prevents sampling of pin PIO0_1 for entering ISP mode. PIO0_1 is available for other uses.
CRP1	0x12345678	Access to chip via the SWD pins is disabled. This mode allows partial flash update using the following ISP commands and restrictions: • Write to RAM command should not access RAM below 0x1000 0300. Access to addresses below 0x1000 0200 is disabled. • Copy RAM to flash command can not write to Sector 0. • Erase command can erase Sector 0 only when all sectors are selected for erase. • Compare command is disabled. • Read Memory command is disabled. This mode is useful when CRP is required and flash field updates are needed but all sectors can not be erased. Since compare command is disabled in case of partial updates the secondary loader should implement checksum mechanism to verify the integrity of the flash.
CRP2	0x87654321	Access to chip via the SWD pins is disabled. The following ISP commands are disabled: • Read Memory • Write to RAM • Go • Copy RAM to flash • Compare When CRP2 is enabled the ISP erase command only allows erasure of all user sectors.
CRP3	0x43218765	Access to chip via the SWD pins is disabled. ISP entry by pulling PIO0_1 LOW is disabled if a valid user code is present in flash sector 0. This mode effectively disables ISP override using PIO0_1 pin. It is up to the user's application to provide a flash update mechanism using IAP calls or call reinvoke ISP command to enable flash update via UART. **Caution: If CRP3 is selected, no future factory testing can be performed on the device.**

Table 372. Code Read Protection hardware/software interaction

CRP option	User Code Valid	PIO0_1 pin at reset	SWD enabled	LPC111x/ LPC11Cxx enters ISP mode	partial flash update in ISP mode
None	No	x	Yes	Yes	Yes
None	Yes	High	Yes	No	NA
None	Yes	Low	Yes	Yes	Yes
CRP1	Yes	High	No	No	NA
CRP1	Yes	Low	No	Yes	Yes
CRP2	Yes	High	No	No	NA

All information provided in this document is subject to legal disclaimers.
© NXP B.V. 2012. All rights reserved.

Table 372. Code Read Protection hardware/software interaction

CRP option	User Code Valid	PIO0_1 pin at reset	SWD enabled	LPC111x/ LPC11Cxx enters ISP mode	partial flash update in ISP mode
CRP2	Yes	Low	No	Yes	No
CRP3	Yes	x	No	No	NA
CRP1	No	x	No	Yes	Yes
CRP2	No	x	No	Yes	No
CRP3	No	x	No	Yes	No

Table 373. ISP commands allowed for different CRP levels

ISP command	CRP1	CRP2	CRP3 (no entry in ISP mode allowed)
Unlock	yes	yes	n/a
Set Baud Rate	yes	yes	n/a
Echo	yes	yes	n/a
Write to RAM	yes; above 0x1000 0300 only	no	n/a
Read Memory	no	no	n/a
Prepare sector(s) for write operation	yes	yes	n/a
Copy RAM to flash	yes; not to sector 0	no	n/a
Go	no	no	n/a
Erase sector(s)	yes; sector 0 can only be erased when all sectors are erased.	yes; all sectors only	n/a
Blank check sector(s)	no	no	n/a
Read Part ID	yes	yes	n/a
Read Boot code version	yes	yes	n/a
Compare	no	no	n/a
ReadUID	yes	yes	n/a

In case a CRP mode is enabled and access to the chip is allowed via the ISP, an unsupported or restricted ISP command will be terminated with return code CODE_READ_PROTECTION_ENABLED.

26.3.8.1 ISP entry protection

In addition to the three CRP modes, the user can prevent the sampling of pin PIO0_1 for entering ISP mode and thereby release pin PIO0_1 for other uses. This is called the NO_ISP mode. The NO_ISP mode can be entered by programming the pattern 0x4E69 7370 at location 0x0000 02FC.

All information provided in this document is subject to legal disclaimers.
© NXP B.V. 2012. All rights reserved.

26.4 UART Communication protocol

All UART ISP commands should be sent as single ASCII strings. Strings should be terminated with Carriage Return (CR) and/or Line Feed (LF) control characters. Extra <CR> and <LF> characters are ignored. All ISP responses are sent as <CR><LF> terminated ASCII strings. Data is sent and received in UU-encoded format.

26.4.1 UART ISP command format

"Command Parameter_0 Parameter_1 ... Parameter_n<CR><LF>" "Data" (Data only for Write commands).

26.4.2 UART ISP response format

"Return_Code<CR><LF>Response_0<CR><LF>Response_1<CR><LF> ... Response_n<CR><LF>" "Data" (Data only for Read commands).

26.4.3 UART ISP data format

The data stream is in UU-encoded format. The UU-encode algorithm converts 3 bytes of binary data in to 4 bytes of printable ASCII character set. It is more efficient than Hex format which converts 1 byte of binary data in to 2 bytes of ASCII hex. The sender should send the check-sum after transmitting 20 UU-encoded lines. The length of any UU-encoded line should not exceed 61 characters (bytes) i.e. it can hold 45 data bytes. The receiver should compare it with the check-sum of the received bytes. If the check-sum matches then the receiver should respond with "OK<CR><LF>" to continue further transmission. If the check-sum does not match the receiver should respond with "RESEND<CR><LF>". In response the sender should retransmit the bytes.

26.4.4 UART ISP flow control

A software XON/XOFF flow control scheme is used to prevent data loss due to buffer overrun. When the data arrives rapidly, the ASCII control character DC3 (stop) is sent to stop the flow of data. Data flow is resumed by sending the ASCII control character DC1 (start). The host should also support the same flow control scheme.

26.4.5 UART ISP command abort

Commands can be aborted by sending the ASCII control character "ESC". This feature is not documented as a command under "ISP Commands" section. Once the escape code is received the ISP command handler waits for a new command.

26.4.6 Interrupts during UART ISP

The boot block interrupt vectors located in the boot block of the flash are active after any reset.

All information provided in this document is subject to legal disclaimers.
© NXP B.V. 2012. All rights reserved.

26.4.7 Interrupts during IAP

The on-chip flash memory is not accessible during erase/write operations. When the user application code starts executing the interrupt vectors from the user flash area are active. Before making any IAP call, either disable the interrupts or ensure that the user interrupt vectors are active in RAM and that the interrupt handlers reside in RAM. The IAP code does not use or disable interrupts.

26.4.8 RAM used by ISP command handler

ISP commands use on-chip RAM from 0x1000 017C to 0x1000 025B. The user could use this area, but the contents may be lost upon reset. Flash programming commands use the top 32 bytes of on-chip RAM. The stack is located at (RAM top – 32). The maximum stack usage is 256 bytes and it grows downwards.

26.4.9 RAM used by IAP command handler

Flash programming commands use the top 32 bytes of on-chip RAM. The maximum stack usage in the user allocated stack space is 128 bytes and it grows downwards.

26.5 UART ISP commands

The following commands are accepted by the ISP command handler. Detailed status codes are supported for each command. The command handler sends the return code INVALID_COMMAND when an undefined command is received. Commands and return codes are in ASCII format.

CMD_SUCCESS is sent by ISP command handler only when received ISP command has been completely executed and the new ISP command can be given by the host. Exceptions from this rule are "Set Baud Rate", "Write to RAM", "Read Memory", and "Go" commands.

Table 374. UART ISP command summary

ISP Command	Usage	Described in
Unlock	U <Unlock Code>	Table 375
Set Baud Rate	B <Baud Rate> <stop bit>	Table 376
Echo	A <setting>	Table 377
Write to RAM	W <start address> <number of bytes>	Table 378
Read Memory	R <address> <number of bytes>	Table 379
Prepare sector(s) for write operation	P <start sector number> <end sector number>	Table 380
Copy RAM to flash	C <Flash address> <RAM address> <number of bytes>	Table 381
Go	G <address> <Mode>	Table 382
Erase sector(s)	E <start sector number> <end sector number>	Table 383
Blank check sector(s)	I <start sector number> <end sector number>	Table 384
Read Part ID	J	Table 385
Read Boot code version	K	Table 387
Compare	M <address1> <address2> <number of bytes>	Table 388
ReadUID	N	Table 389

All information provided in this document is subject to legal disclaimers.
© NXP B.V. 2012. All rights reserved.

26.5.1 Unlock <Unlock code> (UART ISP)

Table 375. UART ISP Unlock command

Command	U
Input	Unlock code: 23130_{10}
Return Code	CMD_SUCCESS | INVALID_CODE | PARAM_ERROR
Description	This command is used to unlock Flash Write, Erase, and Go commands.
Example	"U 23130<CR><LF>" unlocks the Flash Write/Erase & Go commands.

26.5.2 Set Baud Rate <Baud Rate> <stop bit> (UART ISP)

Table 376. UART ISP Set Baud Rate command

Command	B
Input	Baud Rate: 9600 | 19200 | 38400 | 57600 | 115200 Stop bit: 1 | 2
Return Code	CMD_SUCCESS | INVALID_BAUD_RATE | INVALID_STOP_BIT | PARAM_ERROR
Description	This command is used to change the baud rate. The new baud rate is effective after the command handler sends the CMD_SUCCESS return code.
Example	"B 57600 1<CR><LF>" sets the serial port to baud rate 57600 bps and 1 stop bit.

26.5.3 Echo <setting> (UART ISP)

Table 377. UART ISP Echo command

Command	A
Input	Setting: ON = 1 | OFF = 0
Return Code	CMD_SUCCESS | PARAM_ERROR
Description	The default setting for echo command is ON. When ON the ISP command handler sends the received serial data back to the host.
Example	"A 0<CR><LF>" turns echo off.

26.5.4 Write to RAM <start address> <number of bytes> (UART ISP)

The host should send the data only after receiving the CMD_SUCCESS return code. The host should send the check-sum after transmitting 20 UU-encoded lines. The checksum is generated by adding raw data (before UU-encoding) bytes and is reset after transmitting 20 UU-encoded lines. The length of any UU-encoded line should not exceed 61 characters (bytes) i.e. it can hold 45 data bytes. When the data fits in less then 20 UU-encoded lines then the check-sum should be of the actual number of bytes sent. The ISP command handler compares it with the check-sum of the received bytes. If the check-sum matches, the ISP command handler responds with "OK<CR><LF>" to

All information provided in this document is subject to legal disclaimers.
© NXP B.V. 2012. All rights reserved.

continue further transmission. If the check-sum does not match, the ISP command handler responds with "RESEND<CR><LF>". In response the host should retransmit the bytes.

Table 378. UART ISP Write to RAM command

Command	W
Input	**Start Address:** RAM address where data bytes are to be written. This address should be a word boundary. **Number of Bytes:** Number of bytes to be written. Count should be a multiple of 4
Return Code	CMD_SUCCESS | ADDR_ERROR (Address not on word boundary) | ADDR_NOT_MAPPED | COUNT_ERROR (Byte count is not multiple of 4) | PARAM_ERROR | CODE_READ_PROTECTION_ENABLED
Description	This command is used to download data to RAM. Data should be in UU-encoded format. This command is blocked when code read protection is enabled.
Example	"W 268436224 4<CR><LF>" writes 4 bytes of data to address 0x1000 0300.

26.5.5 Read Memory <address> <no. of bytes> (UART ISP)

The data stream is followed by the command success return code. The check-sum is sent after transmitting 20 UU-encoded lines. The checksum is generated by adding raw data (before UU-encoding) bytes and is reset after transmitting 20 UU-encoded lines. The length of any UU-encoded line should not exceed 61 characters (bytes) i.e. it can hold 45 data bytes. When the data fits in less then 20 UU-encoded lines then the check-sum is of actual number of bytes sent. The host should compare it with the checksum of the received bytes. If the check-sum matches then the host should respond with "OK<CR><LF>" to continue further transmission. If the check-sum does not match then the host should respond with "RESEND<CR><LF>". In response the ISP command handler sends the data again.

Table 379. UART ISP Read Memory command

Command	R
Input	**Start Address:** Address from where data bytes are to be read. This address should be a word boundary. **Number of Bytes:** Number of bytes to be read. Count should be a multiple of 4.
Return Code	CMD_SUCCESS followed by <actual data (UU-encoded)> | ADDR_ERROR (Address not on word boundary) | ADDR_NOT_MAPPED | COUNT_ERROR (Byte count is not a multiple of 4) | PARAM_ERROR | CODE_READ_PROTECTION_ENABLED
Description	This command is used to read data from RAM or flash memory. This command is blocked when code read protection is enabled.
Example	"R 268435456 4<CR><LF>" reads 4 bytes of data from address 0x1000 0000.

All information provided in this document is subject to legal disclaimers.
© NXP B.V. 2012. All rights reserved.

26.5.6 Prepare sector(s) for write operation <start sector number> <end sector number> (UART ISP)

This command makes flash write/erase operation a two step process.

Table 380. UART ISP Prepare sector(s) for write operation command

Command	P
Input	**Start Sector Number** **End Sector Number:** Should be greater than or equal to start sector number.
Return Code	CMD_SUCCESS | BUSY | INVALID_SECTOR | PARAM_ERROR
Description	This command must be executed before executing "Copy RAM to flash" or "Erase Sector(s)" command. Successful execution of the "Copy RAM to flash" or "Erase Sector(s)" command causes relevant sectors to be protected again. The boot block can not be prepared by this command. To prepare a single sector use the same "Start" and "End" sector numbers.
Example	"P 0 0<CR><LF>" prepares the flash sector 0.

26.5.7 Copy RAM to flash <Flash address> <RAM address> <no of bytes> (UART ISP)

When writing to the flash, the following limitations apply:

1. The smallest amount of data that can be written to flash by the copy RAM to flash command is 256 byte (equal to one page).
2. One page consists of 16 flash words (lines), and the smallest amount that can be modified per flash write is one flash word (one line). This limitation follows from the application of ECC to the flash write operation, see Section 26.3.7.
3. To avoid write disturbance (a mechanism intrinsic to flash memories), an erase should be performed after following 16 consecutive writes inside the same page. Note that the erase operation then erases the entire sector.

   Remark: Once a page has been written to 16 times, it is still possible to write to other pages within the same sector without performing a sector erase (assuming that those pages have been erased previously).

All information provided in this document is subject to legal disclaimers.
© NXP B.V. 2012. All rights reserved.

Table 381. UART ISP Copy RAM to flash command

Command	C
Input	**Flash Address (DST):** Destination flash address where data bytes are to be written. The destination address should be a 256 byte boundary. **RAM Address (SRC):** Source RAM address from where data bytes are to be read. **Number of Bytes:** Number of bytes to be written. Should be 256 | 512 | 1024 | 4096. **Remark:** In parts with less than 4 kB SRAM, the number of bytes is limited to 1024 (see Table 3).
Return Code	CMD_SUCCESS | SRC_ADDR_ERROR (Address not on word boundary) | DST_ADDR_ERROR (Address not on correct boundary) | SRC_ADDR_NOT_MAPPED | DST_ADDR_NOT_MAPPED | COUNT_ERROR (Byte count is not 256 | 512 | 1024 | 4096) | SECTOR_NOT_PREPARED_FOR WRITE_OPERATION | BUSY | CMD_LOCKED | PARAM_ERROR | CODE_READ_PROTECTION_ENABLED
Description	This command is used to program the flash memory. The "Prepare Sector(s) for Write Operation" command should precede this command. The affected sectors are automatically protected again once the copy command is successfully executed. The boot block cannot be written by this command. This command is blocked when code read protection is enabled.
Example	"C 0 268467504 512<CR><LF>" copies 512 bytes from the RAM address 0x1000 0800 to the flash address 0.

26.5.8 Go <address> <mode> (UART ISP)

Table 382. UART ISP Go command

Command	G
Input	**Address:** Flash or RAM address from which the code execution is to be started. This address should be on a word boundary. **Mode:** T (Execute program in Thumb Mode).
Return Code	CMD_SUCCESS | ADDR_ERROR | ADDR_NOT_MAPPED | CMD_LOCKED | PARAM_ERROR | CODE_READ_PROTECTION_ENABLED
Description	This command is used to execute a program residing in RAM or flash memory. It may not be possible to return to the ISP command handler once this command is successfully executed. This command is blocked when code read protection is enabled. The command must be used with an address of 0x0000 0200 or greater.
Example	"G 512 T<CR><LF>" branches to address 0x0000 0200 in Thumb mode.

All information provided in this document is subject to legal disclaimers.
© NXP B.V. 2012. All rights reserved.

26.5.9 Erase sector(s) <start sector number> <end sector number> (UART ISP)

Table 383. UART ISP Erase sector command

Command	E
Input	**Start Sector Number** **End Sector Number:** Should be greater than or equal to start sector number.
Return Code	CMD_SUCCESS | BUSY | INVALID_SECTOR | SECTOR_NOT_PREPARED_FOR_WRITE_OPERATION | CMD_LOCKED | PARAM_ERROR | CODE_READ_PROTECTION_ENABLED
Description	This command is used to erase one or more sector(s) of on-chip flash memory. The boot block can not be erased using this command. This command only allows erasure of all user sectors when the code read protection is enabled.
Example	"E 2 3<CR><LF>" erases the flash sectors 2 and 3.

26.5.10 Blank check sector(s) <sector number> <end sector number> (UART ISP)

Table 384. UART ISP Blank check sector command

Command	I
Input	**Start Sector Number:** **End Sector Number:** Should be greater than or equal to start sector number.
Return Code	CMD_SUCCESS | SECTOR_NOT_BLANK (followed by <Offset of the first non blank word location> <Contents of non blank word location>) | INVALID_SECTOR | PARAM_ERROR
Description	This command is used to blank check one or more sectors of on-chip flash memory. **Blank check on sector 0 always fails as first 64 bytes are re-mapped to flash boot block.** When CRP is enabled, the blank check command returns 0 for the offset and value of sectors which are not blank. Blank sectors are correctly reported irrespective of the CRP setting.
Example	"I 2 3<CR><LF>" blank checks the flash sectors 2 and 3.

26.5.11 Read Part Identification number (UART ISP)

Table 385. UART ISP Read Part Identification command

Command	J
Input	None.
Return Code	CMD_SUCCESS followed by part identification number in ASCII (see Table 386).
Description	This command is used to read the part identification number.

All information provided in this document is subject to legal disclaimers.
© NXP B.V. 2012. All rights reserved.

Table 386. LPC111x and LPC11Cxx part identification numbers

Device	Hex coding
LPC111x	
LPC1110FD20	0x0A07 102B; 0x1A07 102B
LPC1111FDH20/002	0x0A16 D02B; 0x1A16 D02B
LPC1111FHN33/101	0x041E 502B; 0x2516 D02B
LPC1111FHN33/102	0x2516 D02B
LPC1111FHN33/201	0x0416 502B; 0x2516 902B
LPC1111FHN33/202	0x2516 902B
LPC1111FHN33/103	0x0001 0013
LPC1111FHN33/203	0x0001 0012
LPC1112FD20/102	0x0A24 902B; 0x1A24 902B
LPC1112FDH20/102	0x0A24 902B; 0x1A24 902B
LPC1112FDH28/102	0x0A24 902B; 0x1A24 902B
LPC1112FHN33/101	0x042D 502B; 0x2524 D02B
LPC1112FHN33/102	0x2524 D02B
LPC1112FHN33/201	0x0425 502B; 0x2524 902B
LPC1112FHN33/202	0x2524 902B
LPC1112FHN24/202	0x2524 902B
LPC1112FHI33/202	0x2524 902B
LPC1112FHN33/103	0x0002 0023
LPC1112FHN33/203	0x0002 0022
LPC1112FHI33/203	0x0002 0022
LPC1113FHN33/201	0x0434 502B; 0x2532 902B
LPC1113FHN33/202	0x2532 902B
LPC1113FHN33/301	0x0434 102B; 0x2532 102B
LPC1113FHN33/302	0x2532 102B
LPC1113FBD48/301	0x0434 102B; 0x2532 102B
LPC1113FBD48/302	0x2532 102B
LPC1113FBD48/303	0x0003 0030
LPC1113FHN33/203	0x0003 0032
LPC1113FHN33/303	0x0003 0030
LPC1114FDH28/102	0x0A40 902B; 0x1A40 902B
LPC1114FN28/102	0x0A40 902B; 0x1A40 902B
LPC1114FHN33/201	0x0444 502B; 0x2540 902B
LPC1114FHN33/202	0x2540 902B
LPC1114FHN33/301	0x0444 102B; 0x2540 102B
LPC1114FHN33/302	0x2540 102B
LPC1114FHI33/302	0x2540 102B
LPC1114FBD48/301	0x0444 102B; 0x2540 102B
LPC1114FBD48/302	0x2540 102B
LPC1114FBD48/303	0x0004 0040
LPC1114FHN33/203	0x0004 0042

All information provided in this document is subject to legal disclaimers.

© NXP B.V. 2012. All rights reserved.

Table 386. LPC111x and LPC11Cxx part identification numbers

Device	Hex coding
LPC1114FHN33/303	0x0004 0040
LPC1114FBD48/323	0x0004 0060
LPC1114FBD48/333	0x0004 0070
LPC1114FHN33/333	0x0004 0070
LPC1114FHI33/303	0x0004 0040
LPC11D14FBD100/302	0x2540 102B
LPC1115FBD48/303	0x0005 0080
LPC11Cxx	
LPC11C12FBD48/301	0x1421 102B
LPC11C14FBD48/301	0x1440 102B
LPC11C22FBD48/301	0x1431 102B
LPC11C24FBD48/301	0x1430 102B

26.5.12 Read Boot code version number (UART ISP)

Table 387. UART ISP Read Boot Code version number command

Command	K
Input	None
Return Code	CMD_SUCCESS followed by 2 bytes of boot code version number in ASCII format. It is to be interpreted as <byte1(Major)>.<byte0(Minor)>.
Description	This command is used to read the boot code version number.

26.5.13 Compare <address1> <address2> <no of bytes> (UART ISP)

Table 388. UART ISP Compare command

Command	M
Input	**Address1 (DST):** Starting flash or RAM address of data bytes to be compared. This address should be a word boundary. **Address2 (SRC):** Starting flash or RAM address of data bytes to be compared. This address should be a word boundary. **Number of Bytes:** Number of bytes to be compared; should be a multiple of 4.
Return Code	CMD_SUCCESS | (Source and destination data are equal) COMPARE_ERROR | (Followed by the offset of first mismatch) COUNT_ERROR (Byte count is not a multiple of 4) | ADDR_ERROR | ADDR_NOT_MAPPED | PARAM_ERROR
Description	This command is used to compare the memory contents at two locations. **Compare result may not be correct when source or destination address contains any of the first 512 bytes starting from address zero. First 512 bytes are re-mapped to boot ROM**
Example	"M 8192 268468224 4<CR><LF>" compares 4 bytes from the RAM address 0x1000 8000 to the 4 bytes from the flash address 0x2000.

All information provided in this document is subject to legal disclaimers.
© NXP B.V. 2012. All rights reserved.

26.5.14 ReadUID (UART ISP)

Table 389. UART ISP ReadUID command

Command	N
Input	None
Return Code	CMD_SUCCESS followed by four 32-bit words of E-sort test information in ASCII format. The word sent at the lowest address is sent first.
Description	This command is used to read the unique ID.

26.5.15 UART ISP Return Codes

Table 390. UART ISP Return Codes Summary

Return Code	Mnemonic	Description
0	CMD_SUCCESS	Command is executed successfully. Sent by ISP handler only when command given by the host has been completely and successfully executed.
1	INVALID_COMMAND	Invalid command.
2	SRC_ADDR_ERROR	Source address is not on word boundary.
3	DST_ADDR_ERROR	Destination address is not on a correct boundary.
4	SRC_ADDR_NOT_MAPPED	Source address is not mapped in the memory map. Count value is taken in to consideration where applicable.
5	DST_ADDR_NOT_MAPPED	Destination address is not mapped in the memory map. Count value is taken in to consideration where applicable.
6	COUNT_ERROR	Byte count is not multiple of 4 or is not a permitted value.
7	INVALID_SECTOR	Sector number is invalid or end sector number is greater than start sector number.
8	SECTOR_NOT_BLANK	Sector is not blank.
9	SECTOR_NOT_PREPARED_FOR_WRITE_OPERATION	Command to prepare sector for write operation was not executed.
10	COMPARE_ERROR	Source and destination data not equal.
11	BUSY	Flash programming hardware interface is busy.
12	PARAM_ERROR	Insufficient number of parameters or invalid parameter.
13	ADDR_ERROR	Address is not on word boundary.
14	ADDR_NOT_MAPPED	Address is not mapped in the memory map. Count value is taken in to consideration where applicable.
15	CMD_LOCKED	Command is locked.
16	INVALID_CODE	Unlock code is invalid.
17	INVALID_BAUD_RATE	Invalid baud rate setting.
18	INVALID_STOP_BIT	Invalid stop bit setting.
19	CODE_READ_PROTECTION_ENABLED	Code read protection enabled.

All information provided in this document is subject to legal disclaimers.
© NXP B.V. 2012. All rights reserved.

26.6 C_CAN communication protocol

Remark: The C_CAN interface is available on LPC11Cxx parts only.

The C_CAN bootloader is activated by the ROM reset handler automatically if PIO0_3 is LOW on reset and the ISP entry enabled (PIO0_1 LOW). The C_CAN bootloader initializes the on-chip oscillator and the CAN controller for a CAN bit rate of 100 kbit/s and sets its own CANopen Node ID to a fixed value. The bootloader then waits for CANopen SDO commands and responds to them. These commands allow to read and write anything in a so-called Object Dictionary (OD). The OD contains entries that are addressed via a 16-bit index and 8-bit subindex. The command interface is part of this OD.

The C_CAN ISP command handler allows to perform all functions that are otherwise available via the UART ISP commands, see Table 391.

The SDO commands are received, processed and responded to “forever” until the command to jump to a certain execution address (“Go”) has been received or the chip is reset.

The C_CAN ISP handler occupies the fixed CANopen node ID 125 (0x7D).

Table 391. C_CAN ISP and UART ISP command summary

ISP Command	C_CAN usage	UART usage
Unlock	Section 26.6.3	Table 375
Set Baud Rate	n/a	Table 376
Echo	n/a	Table 377
Write to RAM	Section 26.6.4	Table 378
Read Memory	Section 26.6.5	Table 379
Prepare sector(s) for write operation	Section 26.6.6	Table 380
Copy RAM to flash	Section 26.6.7	Table 381
Go	Section 26.6.8	Table 382
Erase sector(s)	Section 26.6.9	Table 383
Blank check sector(s)	Section 26.6.10	Table 384
Read Part ID	Section 26.6.11	Table 385
Read Boot code version	Section 26.6.12	Table 387
ReadUID	Section 26.6.13	Table 389
Compare	Section 26.6.14	Table 388

26.6.1 C_CAN ISP SDO communication

The CAN ISP node listens for CAN 2.0A (11-bit) messages with the identifier of 0x600 plus the Node ID 0x7D equaling to 0x67D. The node sends SDO responses with the identifier 0x580 plus Node ID equaling to 0x5FD. The SDO communication protocols “expedited” and “segmented” are supported. This means that communication is always confirmed: Each request CAN message will be followed by a response message from the ISP node.

The SDO block transfer mode is not supported.

All information provided in this document is subject to legal disclaimers.
© NXP B.V. 2012. All rights reserved.

For details regarding the SDO protocol, see the *CiA 301 specification*.

26.6.2 C_CAN ISP object directory

Table 392. C_CAN ISP object directory

Index	Subindex	Data type	Access	Description
0x1000	00	UNSIGNED32	RO	Device Type (ASCII “LPC1”)
0x1001	00	-	RO	Error Register (not used, 0x00)
0x1018	00	-		Identity Object
	01	UNSIGNED32	RO	Vendor ID (not used, 0x0000 0000)
	02	UNSIGNED32	RO	Part Identification Number
	03	UNSIGNED32	RO	Boot Code Version Number
0x1F50	00	-		Program Data
	01	DOMAIN	RW	Program Area
0x1F51	00	-		Program Control
	01	UNSIGNED8	RW	Program Control
0x5000	00	UNSIGNED16	WO	Unlock Code
0x5010	00	UNSIGNED32	RW	Memory Read Address
0x5011	00	UNSIGNED32	RW	Memory Read Length
0x5015	00	UNSIGNED32	RW	RAM Write Address
0x5020	00	UNSIGNED16	WO	Prepare Sectors for Write
0x5030	00	UNSIGNED16	WO	Erase Sectors
0x5040	00	-		Blank Check Sectors
	01	UNSIGNED16	WO	Check sectors
	02	UNSIGNED32	RO	Offset of the first non-blank location
0x5050	00	-		Copy RAM to Flash
	01	UNSIGNED32	RW	Flash Address (DST)
	02	UNSIGNED32	RW	RAM Address (SRC)
	03	UNSIGNED16	RW	Number of Bytes
0x5060	00	-		Compare Memory
	01	UNSIGNED32	RW	Address 1
	02	UNSIGNED32	RW	Address 2
	03	UNSIGNED16	RW	Number of Bytes
	04	UNSIGNED32	RO	Offset of the first mismatch
0x5070	00	-		Execution Address
	01	UNSIGNED32	RW	Execution Address
	02	UNSIGNED8	RO	Mode (‘T’ or ‘A’), only ‘T’ supported
0x5100	00	-		Serial Number
	01	UNSIGNED32	RO	Serial Number 1
	02	UNSIGNED32	RO	Serial Number 2
	03	UNSIGNED32	RO	Serial Number 3
	04	UNSIGNED32	RO	Serial Number 4

All information provided in this document is subject to legal disclaimers.
© NXP B.V. 2012. All rights reserved.

26.6.3 Unlock (C_CAN ISP)

Write <Unlock Code> to [0x5000, 0]. Writing an invalid unlock code will return a dedicated abort code.

26.6.4 Write to RAM (C_CAN ISP)

Set RAM write address by writing to [0x5015, 0]. Then write the binary data to [0x1F50, 1]. Since this is a DOMAIN entry, the data can be continuously written. The host terminates the write. The write address in [0x5015, 0] auto-increments, so a write of a larger area may be done in multiple successive write cycles to [0x1F50, 1].

26.6.5 Read memory (C_CAN ISP)

Set RAM read address by writing to [0x5010, 0] and the read length by writing to [0x5011,0]. Then read the binary data from [0x1F50,1]. Since this is a DOMAIN entry, the data is continuously read. The device terminates the read when the number of bytes in the read length entry has been read. The read address in [0x5010, 0] auto-increments, so a read of a larger area may be done in multiple successive read cycles from [0x1F50,1].

26.6.6 Prepare sectors for write operation (C_CAN ISP)

Write a 16-bit value to [0x5020, 0] with the start sector number in the lower eight bits and the end sector number in the upper eight bits.

26.6.7 Copy RAM to flash (C_CAN ISP)

Write the parameters into entry [0x5050, 1 to 3]. The write of the number of bytes into [0x5050,3] starts the programming.

See Section 26.5.4 for limitations on the write-to-flash process.

26.6.8 Go (C_CAN ISP)

Write the start address into [0x5070, 0]. Then trigger the “start application” command by writing the value 0x1 to [0x1F51, 1].

26.6.9 Erase sectors (C_CAN ISP)

Write a 16-bit value to [0x5030, 0] with the start sector number in the lower eight bits and the end sector number in the upper eight bits.

26.6.10 Blank check sectors (C_CAN ISP)

Write a 16-bit value to [0x5040, 1] with the start sector number in the lower eight bits and the end sector number in the upper eight bits.

If the SECTOR_NOT_BLANK abort code is returned, the entry [0x5040, 2] contains the offset of the first non-blank location.

26.6.11 Read PartID (C_CAN ISP)

Read [0x1018, 2]. See Table 386.

All information provided in this document is subject to legal disclaimers.
© NXP B.V. 2012. All rights reserved.

26.6.12 Read boot code version (C_CAN ISP)

Read [0x1018, 3]

26.6.13 Read serial number (C_CAN ISP)

Read [0x5100, 1 to 4]

26.6.14 Compare (C_CAN ISP)

Write the parameters into entry [0x5060, 1 to 3]. The write of the number of bytes into[0x5060, 3] starts the comparison.

If the COMPARE_ERROR abort code is returned, the entry [0x5060, 4] can be read to get the offset of the first mismatch.

26.6.15 C_CAN ISP SDO abort codes

The OD entries that trigger an action return an appropriate SDO abort code when the action returned an error. The abort code is 0x0F00 0000 plus the value of the corresponding ISP return code in the lowest byte. Table 393 shoes the list of abort codes.

In addition, the regular CANopen SDO abort codes for invalid access to OD entries are also supported.

Table 393. C_CAN ISP SDO abort codes

UART ISP Error Code	SDO Abort Code	Value
ADDR_ERROR	SDOABORT_ADDR_ERROR	0x0F00 000D
ADDR_NOT_MAPPED	SDOABORT_ADDR_ NOT_MAPPED	0x0F00 000E
CMD_LOCKED	SDOABORT_CMD_LOCKED	0x0F00 000F
CODE_READ_PROTECTION_ ENABLED	SDOABORT_CODE_READ _PROTECTION_ENABLED	0x0F00 0013
COMPARE_ERROR	SDOABORT_COMPARE_ERROR	0x0F00 000A
COUNT_ERROR	SDOABORT_COUNT_ERROR	0x0F00 0006
DST_ADDR_ERROR	SDOABORT_DST_ADDR_ERROR	0x0F00 0003
DST_ADDR_NOT_MAPPED	SDOABORT_DST_ADDR_ NOT_MAPPED	0x0F00 0005
INVALID_CODE	SDOABORT_INVALID_CODE	0x0F00 0010
INVALID_COMMAND	SDOABORT_INVALID_COMMAND	0x0F00 0001
INVALID_SECTOR	SDOABORT_INVALID_SECTOR	0x0F00 0007
PARAM_ERROR	SDOABORT_PARAM_ERROR	0x0F00 000C
SECTOR_NOT_BLANK	SDOABORT_SECTOR_ NOT_BLANK	0x0F00 0008
SECTOR_NOT_PREPARED_ FOR_WRITE_OPERATION	SDOABORT_SECTOR_NOT_ PREPARED_FOR_WRITE_ OPERATION	0x0F00 0009
SRC_ADDR_ERROR	SDOABORT_SRC_ADDR_ERROR	0x0F00 0002
SRC_ADDR_NOT_MAPPED	SDOABORT_SRC_ADDR_ NOT_MAPPED	0x0F00 0004

All information provided in this document is subject to legal disclaimers.
© NXP B.V. 2012. All rights reserved.

26.6.16 Differences to fully-compliant CANopen

While the bootloader uses the SDO communication protocol and the Object Dictionary data organization method, it is not a fully CiA 301 standard compliant CANopen node.The following features are not available or different to the standard:

- Network Management (NMT) message processing not available.
- Heartbeat message and entry 0x1017 not available.
- Uses proprietary SDO abort codes to indicate device errors.
- To speed up communication, “empty” SDO responses during SDO segmented download/write to the node are shortened to one data byte, rather than full eight data bytes as the standard describes.
- Entry [0x1018, 1] Vendor ID reads 0x0000 0000 rather than an official CiA-assigned unique Vendor ID.
- The host must use a different method to identify the CAN ISP devices.

26.7 IAP commands

For in application programming the IAP routine should be called with a word pointer in register r0 pointing to memory (RAM) containing command code and parameters. Result of the IAP command is returned in the result table pointed to by register r1. The user can reuse the command table for result by passing the same pointer in registers r0 and r1. The parameter table should be big enough to hold all the results in case the number of results are more than number of parameters. Parameter passing is illustrated in the Figure 91. The number of parameters and results vary according to the IAP command. The maximum number of parameters is 5, passed to the "Copy RAM to FLASH" command. The maximum number of results is 4, returned by the "ReadUID" command. The command handler sends the status code INVALID_COMMAND when an undefined command is received. The IAP routine resides at 0x1FFF 1FF0 location and it is thumb code.

The IAP function could be called in the following way using C.

Define the IAP location entry point. Since the 0th bit of the IAP location is set there will be a change to Thumb instruction set when the program counter branches to this address.

```
#define IAP_LOCATION 0x1fff1ff1
```

Define data structure or pointers to pass IAP command table and result table to the IAP function:

```
unsigned long command[5];
unsigned long result[4];
```

or

```
unsigned long * command;
unsigned long * result;
command=(unsigned long *) 0x...
result= (unsigned long *) 0x...
```


All information provided in this document is subject to legal disclaimers.
© NXP B.V. 2012. All rights reserved.

Define pointer to function type, which takes two parameters and returns void. Note the IAP returns the result with the base address of the table residing in R1.

```
typedef void (*IAP)(unsigned int [],unsigned int[]);
IAP iap_entry;
```

Setting function pointer:

```
iap_entry=(IAP) IAP_LOCATION;
```

Whenever you wish to call IAP you could use the following statement.

```
iap_entry (command, result);
```

As per the ARM specification (The ARM Thumb Procedure Call Standard SWS ESPC 0002 A-05) up to 4 parameters can be passed in the r0, r1, r2 and r3 registers respectively. Additional parameters are passed on the stack. Up to 4 parameters can be returned in the r0, r1, r2 and r3 registers respectively. Additional parameters are returned indirectly via memory. Some of the IAP calls require more than 4 parameters. If the ARM suggested scheme is used for the parameter passing/returning then it might create problems due to difference in the C compiler implementation from different vendors. The suggested parameter passing scheme reduces such risk.

The flash memory is not accessible during a write or erase operation. IAP commands, which results in a flash write/erase operation, use 32 bytes of space in the top portion of the on-chip RAM for execution. The user program should not be use this space if IAP flash programming is permitted in the application.

Table 394. IAP Command Summary

IAP Command	Command Code	Described in
Prepare sector(s) for write operation	50 (decimal)	Table 395
Copy RAM to flash	51 (decimal)	Table 396
Erase sector(s)	52 (decimal)	Table 397
Blank check sector(s)	53 (decimal)	Table 398
Read Part ID	54 (decimal)	Table 399
Read Boot code version	55 (decimal)	Table 400
Compare	56 (decimal)	Table 401
Reinvoke ISP	57 (decimal)	Table 402
Read UID	58 (decimal)	Table 403
Erase page	59 (decimal)	Table 404

All information provided in this document is subject to legal disclaimers.
© NXP B.V. 2012. All rights reserved.

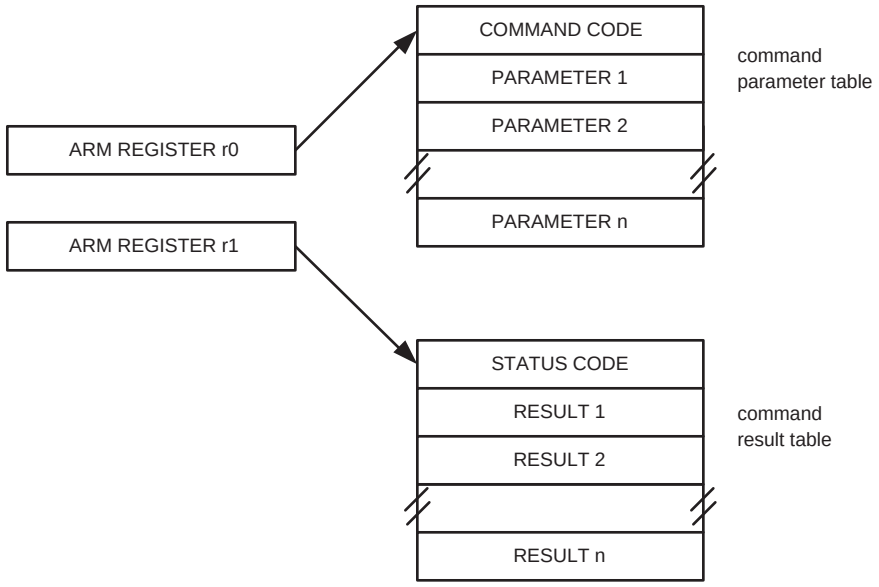

Fig 91. IAP parameter passing

26.7.1 Prepare sector(s) for write operation (IAP)

This command makes flash write/erase operation a two step process.

Table 395. IAP Prepare sector(s) for write operation command

Command	Prepare sector(s) for write operation
Input	**Command code: 50 (decimal)** **Param0:** Start Sector Number **Param1:** End Sector Number (should be greater than or equal to start sector number).
Return Code	CMD_SUCCESS | BUSY | INVALID_SECTOR
Result	None
Description	This command must be executed before executing "Copy RAM to flash" or "Erase Sector(s)" command. Successful execution of the "Copy RAM to flash" or "Erase Sector(s)" command causes relevant sectors to be protected again. The boot sector can not be prepared by this command. To prepare a single sector use the same "Start" and "End" sector numbers.

26.7.2 Copy RAM to flash (IAP)

See Section 26.5.4 for limitations on the write-to-flash process.

All information provided in this document is subject to legal disclaimers.
© NXP B.V. 2012. All rights reserved.

Table 396. IAP Copy RAM to flash command

Command	Copy RAM to flash
Input	**Command code: 51 (decimal)** **Param0(DST):** Destination flash address where data bytes are to be written. This address should be a 256 byte boundary. **Param1(SRC):** Source RAM address from which data bytes are to be read. This address should be a word boundary. **Param2:** Number of bytes to be written. Should be 256 | 512 | 1024 | 4096. **Param3:** System Clock Frequency (CCLK) in kHz. **Remark:** In parts with less than 4 kB SRAM, Param2 is limited to 1024 (see Table 3).
Return Code	CMD_SUCCESS | SRC_ADDR_ERROR (Address not a word boundary) | DST_ADDR_ERROR (Address not on correct boundary) | SRC_ADDR_NOT_MAPPED | DST_ADDR_NOT_MAPPED | COUNT_ERROR (Byte count is not 256 | 512 | 1024 | 4096) | SECTOR_NOT_PREPARED_FOR_WRITE_OPERATION | BUSY
Result	None
Description	This command is used to program the flash memory. The affected sectors should be prepared first by calling "Prepare Sector for Write Operation" command. The affected sectors are automatically protected again once the copy command is successfully executed. The boot sector can not be written by this command.

26.7.3 Erase Sector(s) (IAP)

Table 397. IAP Erase Sector(s) command

Command	Erase Sector(s)
Input	**Command code: 52 (decimal)** **Param0:** Start Sector Number **Param1:** End Sector Number (should be greater than or equal to start sector number). **Param2:** System Clock Frequency (CCLK) in kHz.
Return Code	CMD_SUCCESS | BUSY | SECTOR_NOT_PREPARED_FOR_WRITE_OPERATION | INVALID_SECTOR
Result	None
Description	This command is used to erase a sector or multiple sectors of on-chip flash memory. The boot sector can not be erased by this command. To erase a single sector use the same "Start" and "End" sector numbers.

All information provided in this document is subject to legal disclaimers.
© NXP B.V. 2012. All rights reserved.

26.7.4 Blank check sector(s) (IAP)

Table 398. IAP Blank check sector(s) command

Command	Blank check sector(s)
Input	**Command code: 53 (decimal)** **Param0:** Start Sector Number **Param1:** End Sector Number (should be greater than or equal to start sector number).
Return Code	CMD_SUCCESS | BUSY | SECTOR_NOT_BLANK | INVALID_SECTOR
Result	**Result0:** Offset of the first non blank word location if the Status Code is SECTOR_NOT_BLANK. **Result1:** Contents of non blank word location.
Description	This command is used to blank check a sector or multiple sectors of on-chip flash memory. To blank check a single sector use the same "Start" and "End" sector numbers.

26.7.5 Read Part Identification number (IAP)

Table 399. IAP Read Part Identification command

Command	Read part identification number
Input	**Command code: 54 (decimal)** **Parameters:** None
Return Code	CMD_SUCCESS |
Result	**Result0:** Part Identification Number.
Description	This command is used to read the part identification number.

26.7.6 Read Boot code version number (IAP)

Table 400. IAP Read Boot Code version number command

Command	Read boot code version number
Input	**Command code: 55 (decimal)** **Parameters:** None
Return Code	CMD_SUCCESS |
Result	**Result0:** 2 bytes of boot code version number. Read as <byte1(Major)>.<byte0(Minor)>
Description	This command is used to read the boot code version number.

All information provided in this document is subject to legal disclaimers.
© NXP B.V. 2012. All rights reserved.

26.7.7 Compare <address1> <address2> <no of bytes> (IAP)

Table 401. IAP Compare command

Command	Compare
Input	**Command code: 56 (decimal)** **Param0(DST):** Starting flash or RAM address of data bytes to be compared. This address should be a word boundary. **Param1(SRC):** Starting flash or RAM address of data bytes to be compared. This address should be a word boundary. **Param2:** Number of bytes to be compared; should be a multiple of 4.
Return Code	CMD_SUCCESS | COMPARE_ERROR | COUNT_ERROR (Byte count is not a multiple of 4) | ADDR_ERROR | ADDR_NOT_MAPPED
Result	**Result0:** Offset of the first mismatch if the Status Code is COMPARE_ERROR.
Description	This command is used to compare the memory contents at two locations. **The result may not be correct when the source or destination includes any of the first 512 bytes starting from address zero. The first 512 bytes can be re-mapped to RAM.**

All information provided in this document is subject to legal disclaimers.
© NXP B.V. 2012. All rights reserved.

26.7.8 Reinvoke ISP (IAP)

Table 402. IAP Reinvoke ISP

Command	Compare
Input	**Command code: 57 (decimal)**
Return Code	None
Result	**None.**
Description	This command is used to invoke the bootloader in ISP mode. It maps boot vectors, sets PCLK = CCLK, configures UART pins RXD and TXD, resets counter/timer CT32B1 and resets the U0FDR (see Table 199). This command may be used when a valid user program is present in the internal flash memory and the PIO0_1 pin is not accessible to force the ISP mode. If there is more than one boot source available (see Section 26.1), pin PIO0_3 must be configured correctly to select the appropriate boot source: • Configure pin PIO0_3 as output. • Drive the output to LOW or HIGH depending on the boot source (see Section 26.3.1).

26.7.9 ReadUID (IAP)

Table 403. IAP ReadUID command

Command	Compare
Input	**Command code: 58 (decimal)**
Return Code	CMD_SUCCESS
Result	**Result0:** The first 32-bit word (at the lowest address). **Result1:** The second 32-bit word. **Result2:** The third 32-bit word. **Result3:** The fourth 32-bit word.
Description	This command is used to read the unique ID.

26.7.10 Erase page

Remark: See Table 368 for list of parts that implement this command.

Table 404. IAP Erase page command

Command	Erase page
Input	**Command code: 59 (decimal)** **Param0:** Start page number. **Param1:** End page number (should be greater than or equal to start page) **Param2:** System Clock Frequency (CCLK) in kHz.
Return Code	CMD_SUCCESS | BUSY | SECTOR_NOT_PREPARED_FOR_WRITE_OPERATION | INVALID_SECTOR
Result	None
Description	This command is used to erase a page or multiple pages of on-chip flash memory. To erase a single page use the same "start" and "end" page numbers. See Table 368 for list of parts that implement this command.

All information provided in this document is subject to legal disclaimers.
© NXP B.V. 2012. All rights reserved.

26.7.11 IAP Status Codes

Table 405. IAP Status Codes Summary

Status Code	Mnemonic	Description
0	CMD_SUCCESS	Command is executed successfully.
1	INVALID_COMMAND	Invalid command.
2	SRC_ADDR_ERROR	Source address is not on a word boundary.
3	DST_ADDR_ERROR	Destination address is not on a correct boundary.
4	SRC_ADDR_NOT_MAPPED	Source address is not mapped in the memory map. Count value is taken in to consideration where applicable.
5	DST_ADDR_NOT_MAPPED	Destination address is not mapped in the memory map. Count value is taken in to consideration where applicable.
6	COUNT_ERROR	Byte count is not multiple of 4 or is not a permitted value.
7	INVALID_SECTOR	Sector number is invalid.
8	SECTOR_NOT_BLANK	Sector is not blank.
9	SECTOR_NOT_PREPARED_FOR_WRITE_OPERATION	Command to prepare sector for write operation was not executed.
10	COMPARE_ERROR	Source and destination data is not same.
11	BUSY	Flash programming hardware interface is busy.

26.8 Debug notes

26.8.1 Comparing flash images

Depending on the debugger used and the IDE debug settings, the memory that is visible when the debugger connects might be the boot ROM, the internal SRAM, or the flash. To help determine which memory is present in the current debug environment, check the value contained at flash address 0x0000 0004. This address contains the entry point to the code in the ARM Cortex-M0 vector table, which is the bottom of the boot ROM, the internal SRAM, or the flash memory respectively.

Table 406. Memory mapping in debug mode

Memory mapping mode	Memory start address visible at 0x0000 0004
Bootloader mode	0x1FFF 0000
User flash mode	0x0000 0000
User SRAM mode	0x1000 0000

26.8.2 Serial Wire Debug (SWD) flash programming interface

Debug tools can write parts of the flash image to RAM and then execute the IAP call "Copy RAM to flash" repeatedly with proper offset.

All information provided in this document is subject to legal disclaimers.
© NXP B.V. 2012. All rights reserved.

26.9 Flash memory access

Depending on the system clock frequency, access to the flash memory can be configured with various access times by writing to the FLASHCFG register at address 0x4003 C010.

Remark: Improper setting of this register may result in incorrect operation of the LPC111x/LPC11Cxx flash memory.

Table 407. Flash configuration register (FLASHCFG, address 0x4003 C010) bit description

Bit	Symbol	Value	Description	Reset value
1:0	FLASHTIM		Flash memory access time. FLASHTIM +1 is equal to the number of system clocks used for flash access.	10
		0x0	1 system clock flash access time (for system clock frequencies of up to 20 MHz).	
		0x1	2 system clocks flash access time (for system clock frequencies of up to 40 MHz).	
		0x2	3 system clocks flash access time (for system clock frequencies of up to 50 MHz).	
		0x3	Reserved.	
31:2	-	-	Reserved. **User software must not change the value of these bits. Bits 31:2 must be written back exactly as read**.	-

All information provided in this document is subject to legal disclaimers.

© NXP B.V. 2012. All rights reserved.

26.10 Flash signature generation

The flash module contains a built-in signature generator. This generator can produce a 128-bit signature from a range of flash memory. A typical usage is to verify the flashed contents against a calculated signature (e.g. during programming).

The address range for generating a signature must be aligned on flash-word boundaries, i.e. 128-bit boundaries. Once started, signature generation completes independently. While signature generation is in progress, the flash memory cannot be accessed for other purposes, and an attempted read will cause a wait state to be asserted until signature generation is complete. Code outside of the flash (e.g. internal RAM) can be executed during signature generation. This can include interrupt services, if the interrupt vector table is re-mapped to memory other than the flash memory. The code that initiates signature generation should also be placed outside of the flash memory.

26.10.1 Register description for signature generation

Table 408. Register overview: FMC (base address 0x4003 C000)

Name	Access	Address offset	Description	Reset value	Reference
FMSSTART	R/W	0x020	Signature start address register	0	Table 409
FMSSTOP	R/W	0x024	Signature stop-address register	0	Table 410
FMSW0	R	0x02C	Word 0 [31:0]	-	Table 411
FMSW1	R	0x030	Word 1 [63:32]	-	Table 412
FMSW2	R	0x034	Word 2 [95:64]	-	Table 413
FMSW3	R	0x038	Word 3 [127:96]	-	Table 414
FMSTAT	R	0xFE0	Signature generation status register	0	Section 26.10.1.3
FMSTATCLR	W	0xFE8	Signature generation status clear register	-	Section 26.10.1.4

26.10.1.1 Signature generation address and control registers

These registers control automatic signature generation. A signature can be generated for any part of the flash memory contents. The address range to be used for generation is defined by writing the start address to the signature start address register (FMSSTART) and the stop address to the signature stop address register (FMSSTOP. The start and stop addresses must be aligned to 128-bit boundaries and can be derived by dividing the byte address by 16.

Signature generation is started by setting the SIG_START bit in the FMSSTOP register. Setting the SIG_START bit is typically combined with the signature stop address in a single write.

Table 409 and Table 410 show the bit assignments in the FMSSTART and FMSSTOP registers respectively.

All information provided in this document is subject to legal disclaimers.
© NXP B.V. 2012. All rights reserved.

Table 409. Flash Module Signature Start register (FMSSTART - 0x4003 C020) bit description

Bit	Symbol	Description	Reset value
16:0	START	Signature generation start address (corresponds to AHB byte address bits[20:4]).	0
31:17	-	Reserved, user software should not write ones to reserved bits. The value read from a reserved bit is not defined.	NA

Table 410. Flash Module Signature Stop register (FMSSTOP - 0x4003 C024) bit description

Bit	Symbol	Value	Description	Reset value
16:0	STOP		BIST stop address divided by 16 (corresponds to AHB byte address [20:4]).	0
17	SIG_START		Start control bit for signature generation.	0
		0	Signature generation is stopped	
		1	Initiate signature generation	
31:18	-		Reserved, user software should not write ones to reserved bits. The value read from a reserved bit is not defined.	NA

26.10.1.2 Signature generation result registers

The signature generation result registers return the flash signature produced by the embedded signature generator. The 128-bit signature is reflected by the four registers FMSW0, FMSW1, FMSW2 and FMSW3.

The generated flash signature can be used to verify the flash memory contents. The generated signature can be compared with an expected signature and thus makes saves time and code space. The method for generating the signature is described in Section 26.10.2.

Table 414 show bit assignment of the FMSW0 and FMSW1, FMSW2, FMSW3 registers respectively.

Table 411. FMSW0 register bit description (FMSW0, address: 0x4003 C02C)

Bit	Symbol	Description	Reset value
31:0	SW0[31:0]	Word 0 of 128-bit signature (bits 31 to 0).	-

Table 412. FMSW1 register bit description (FMSW1, address: 0x4003 C030)

Bit	Symbol	Description	Reset value
31:0	SW1[63:32]	Word 1 of 128-bit signature (bits 63 to 32).	-

Table 413. FMSW2 register bit description (FMSW2, address: 0x4003 C034)

Bit	Symbol	Description	Reset value
31:0	SW2[95:64]	Word 2 of 128-bit signature (bits 95 to 64).	-

Table 414. FMSW3 register bit description (FMSW3, address: 0x4003 40C8)

Bit	Symbol	Description	Reset value
31:0	SW3[127:96]	Word 3 of 128-bit signature (bits 127 to 96).	-

All information provided in this document is subject to legal disclaimers. © NXP B.V. 2012. All rights reserved.

26.10.1.3 Flash Module Status register

The read-only FMSTAT register provides a means of determining when signature generation has completed. Completion of signature generation can be checked by polling the SIG_DONE bit in FMSTAT. SIG_DONE should be cleared via the FMSTATCLR register before starting a signature generation operation, otherwise the status might indicate completion of a previous operation.

Table 415. Flash module Status register (FMSTAT - 0x4003 CFE0) bit description

Bit	Symbol	Description	Reset value
1:0	-	Reserved, user software should not write ones to reserved bits. The value read from a reserved bit is not defined.	NA
2	SIG_DONE	When 1, a previously started signature generation has completed. See FMSTATCLR register description for clearing this flag.	0
31:3	-	Reserved, user software should not write ones to reserved bits. The value read from a reserved bit is not defined.	NA

26.10.1.4 Flash Module Status Clear register

The FMSTATCLR register is used to clear the signature generation completion flag.

Table 416. Flash Module Status Clear register (FMSTATCLR - 0x0x4003 CFE8) bit description

Bit	Symbol	Description	Reset value
1:0	-	Reserved, user software should not write ones to reserved bits. The value read from a reserved bit is not defined.	NA
2	SIG_DONE_CLR	Writing a 1 to this bits clears the signature generation completion flag (SIG_DONE) in the FMSTAT register.	0
31:3	-	Reserved, user software should not write ones to reserved bits. The value read from a reserved bit is not defined.	NA

26.10.2 Algorithm and procedure for signature generation

Signature generation

A signature can be generated for any part of the flash contents. The address range to be used for signature generation is defined by writing the start address to the FMSSTART register, and the stop address to the FMSSTOP register.

The signature generation is started by writing a ‘1’ to the SIG_START bit in the FMSSTOP register. Starting the signature generation is typically combined with defining the stop address, which is done in the STOP bits of the same register.

The time that the signature generation takes is proportional to the address range for which the signature is generated. Reading of the flash memory for signature generation uses a self-timed read mechanism and does not depend on any configurable timing settings for the flash. A safe estimation for the duration of the signature generation is:

Duration = int((60 / tcy) + 3) x (FMSSTOP - FMSSTART + 1)

All information provided in this document is subject to legal disclaimers.
© NXP B.V. 2012. All rights reserved.

When signature generation is triggered via software, the duration is in AHB clock cycles, and tcy is the time in ns for one AHB clock. The SIG_DONE bit in FMSTAT can be polled by software to determine when signature generation is complete.

After signature generation, a 128-bit signature can be read from the FMSW0 to FMSW3 registers. The 128-bit signature reflects the corrected data read from the flash. The 128-bit signature reflects flash parity bits and check bit values.

Content verification

The signature as it is read from the FMSW0 to FMSW3 registers must be equal to the reference signature. The algorithms to derive the reference signature is given in Figure 92.

```
int128 signature = 0
int128 nextSignature
FOR address = flashpage 0 TO address = flashpage max
{
        FOR i = 0 TO 126 {
                nextSignature[i] = flashword[i] XOR signature[i+1]}
        nextSignature[127] = flashword[127] XOR signature[0] XOR signature[2]
                XOR signature[27] XOR signature[29]
        signature = nextSignature
}
return signature
```

Fig 92. Algorithm for generating a 128-bit signature

All information provided in this document is subject to legal disclaimers.

© NXP B.V. 2012. All rights reserved.

27.1 How to read this chapter

The debug functionality is identical for all LPC111x, LPC11D14, and LPC11Cxx parts.

27.2 Features

- Supports ARM Serial Wire Debug mode.
- Direct debug access to all memories, registers, and peripherals.
- No target resources are required for the debugging session.
- Four breakpoints. Four instruction breakpoints that can also be used to remap instruction addresses for code patches. Two data comparators that can be used to remap addresses for patches to literal values.
- Two data watchpoints that can also be used as triggers.

27.3 Introduction

Debug functions are integrated into the ARM Cortex-M0. Serial wire debug functions are supported. The ARM Cortex-M0 is configured to support up to four breakpoints and two watchpoints.

27.4 Description

Debugging with the LPC111x/LPC11Cxx uses the Serial Wire Debug mode.

27.5 Pin description

The tables below indicate the various pin functions related to debug. Some of these functions share pins with other functions which therefore may not be used at the same time.

Table 417. Serial Wire Debug pin description

Pin Name	Type	Description
SWCLK	Input	**Serial Wire Clock.** This pin is the clock for debug logic when in the Serial Wire Debug mode (SWCLK). This pin is pulled up internally.
SWDIO	Input / Output	**Serial wire debug data input/output.** The SWDIO pin is used by an external debug tool to communicate with and control the LPC111x/LPC11Cxx. This pin is pulled up internally.

All information provided in this document is subject to legal disclaimers.
© NXP B.V. 2012. All rights reserved.

27.6 Debug notes

27.6.1 Debug limitations

Important: The user should be aware of certain limitations during debugging. The most important is that, due to limitations of the ARM Cortex-M0 integration, the LPC111x/LPC11Cxx cannot wake up in the usual manner from Deep-sleep mode. It is recommended not to use this mode during debug.

Another issue is that debug mode changes the way in which reduced power modes work internal to the ARM Cortex-M0 CPU, and this ripples through the entire system. These differences mean that power measurements should not be made while debugging, the results will be higher than during normal operation in an application.

During a debugging session, the System Tick Timer is automatically stopped whenever the CPU is stopped. Other peripherals are not affected.

27.6.2 Debug connections

For debugging purposes, it is useful to provide access to the ISP entry pin PIO0_1. This pin can be used to recover the part from configurations which would disable the SWD port such as improper PLL configuration, reconfiguration of SWD pins as ADC inputs, entry into Deep power-down mode out of reset, etc. This pin can be used for other functions such as GPIO, but it should not be held low on power-up or reset.

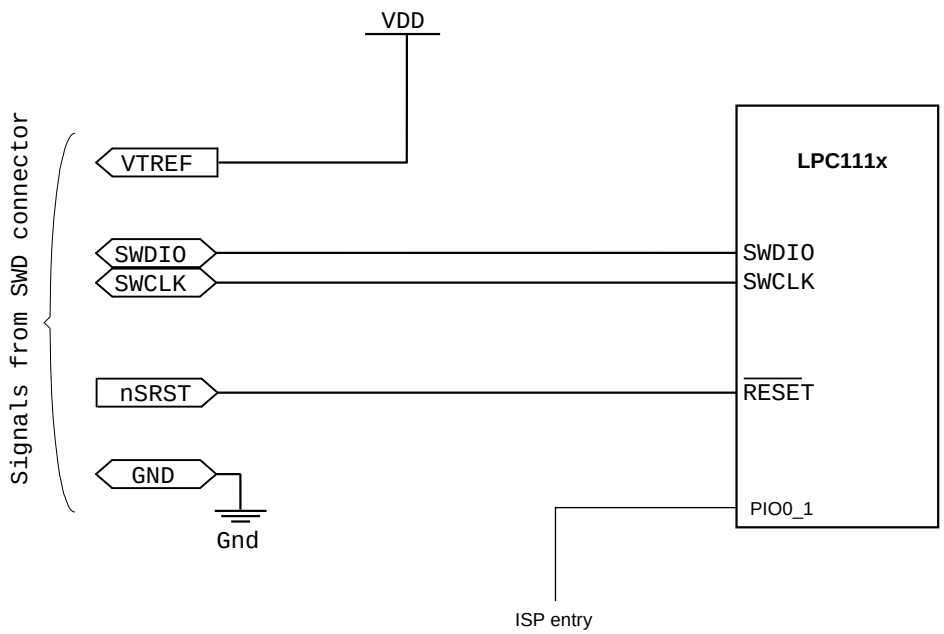

The VTREF pin on the SWD connector enables the debug connector to match the target voltage.

Fig 93. Connecting the SWD pins to a standard SWD connector

All information provided in this document is subject to legal disclaimers.

© NXP B.V. 2012. All rights reserved.

28.1 How to read this chapter

The NMI is implemented on the LPC1100XL series (see Section 3.5.28). Parts on the LPC1100, LPC1100L, and LPC1100C series do not support the NMI.

28.2 Introduction

The following material is using the ARM *Cortex-M0 User Guide*. Minor changes have been made regarding the specific implementation of the Cortex-M0 for the LPC111x, LPC11D14, and LPC11Cxx parts.

The ARM Cortex-M0 documentation is also available in Ref. 1 and Ref. 2.

28.3 About the Cortex-M0 processor and core peripherals

The Cortex-M0 processor is an entry-level 32-bit ARM Cortex processor designed for a broad range of embedded applications. It offers significant benefits to developers, including:

- a simple architecture that is easy to learn and program
- ultra-low power, energy efficient operation
- excellent code density
- deterministic, high-performance interrupt handling
- upward compatibility with Cortex-M processor family.

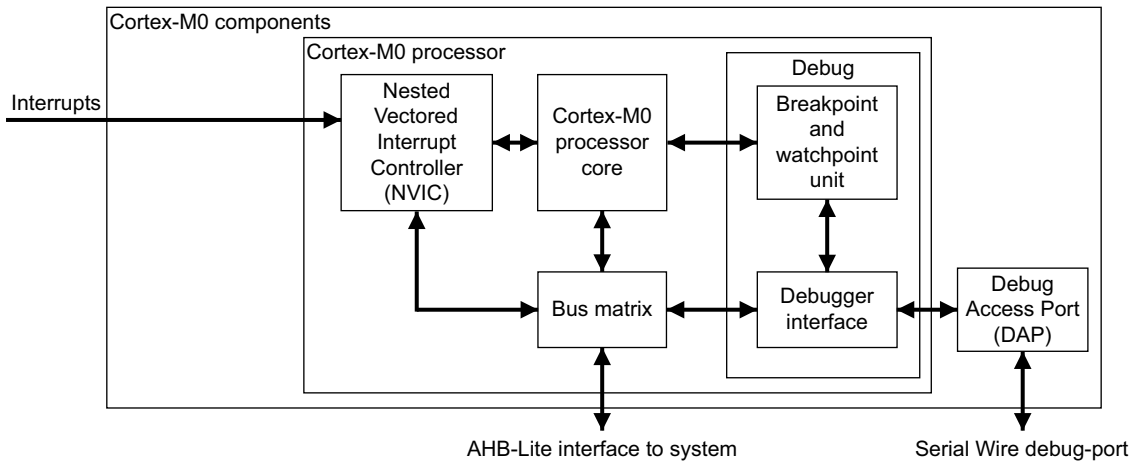

Fig 94. Cortex-M0 implementation

All information provided in this document is subject to legal disclaimers.
© NXP B.V. 2012. All rights reserved.

The Cortex-M0 processor is built on a highly area and power optimized 32-bit processor core, with a 3-stage pipeline von Neumann architecture. The processor delivers exceptional energy efficiency through a small but powerful instruction set and extensively optimized design, providing high-end processing hardware including a single-cycle multiplier.

The Cortex-M0 processor implements the ARMv6-M architecture, which is based on the 16-bit Thumb instruction set and includes Thumb-2 technology. This provides the exceptional performance expected of a modern 32-bit architecture, with a higher code density than other 8-bit and 16-bit microcontrollers.

The Cortex-M0 processor closely integrates a configurable **Nested Vectored Interrupt Controlle**r (NVIC), to deliver industry-leading interrupt performance. The NVIC:

- includes a **non-maskable interrupt** (NMI). See Section 28.1 for implementation of the NMI for specific parts.
- provides zero jitter interrupt option
- provides four interrupt priority levels.

The tight integration of the processor core and NVIC provides fast execution of **interrupt service routines** (ISRs), dramatically reducing the interrupt latency. This is achieved through the hardware stacking of registers, and the ability to abandon and restart load-multiple and store-multiple operations. Interrupt handlers do not require any assembler wrapper code, removing any code overhead from the ISRs. Tail-chaining optimization also significantly reduces the overhead when switching from one ISR to another.

To optimize low-power designs, the NVIC integrates with the sleep modes, that include a Deep-sleep function that enables the entire device to be rapidly powered down.

28.3.1 System-level interface

The Cortex-M0 processor provides a single system-level interface using AMBA technology to provide high speed, low latency memory accesses.

28.3.2 Integrated configurable debug

The Cortex-M0 processor implements a complete hardware debug solution, with extensive hardware breakpoint and watchpoint options. This provides high system visibility of the processor, memory and peripherals through a 2-pin **Serial Wire Debug** (SWD) port that is ideal for microcontrollers and other small package devices.

28.3.3 Cortex-M0 processor features summary

- high code density with 32-bit performance
- tools and binary upwards compatible with Cortex-M processor family
- integrated ultra low-power sleep modes
- efficient code execution permits slower processor clock or increases sleep mode time
- single-cycle 32-bit hardware multiplier
- zero jitter interrupt handling

All information provided in this document is subject to legal disclaimers.
© NXP B.V. 2012. All rights reserved.

- extensive debug capabilities.

28.3.4 Cortex-M0 core peripherals

These are:

NVIC — The NVIC is an embedded interrupt controller that supports low latency interrupt processing.

System Control Block — The **System Control Block** (SCB) is the programmers model interface to the processor. It provides system implementation information and system control, including configuration, control, and reporting of system exceptions.

System timer — The system timer, SysTick, is a 24-bit count-down timer. Use this as a Real Time Operating System (RTOS) tick timer or as a simple counter.

28.4 Processor

28.4.1 Programmers model

This section describes the Cortex-M0 programmers model. In addition to the individual core register descriptions, it contains information about the processor modes and stacks.

28.4.1.1 Processor modes

The processor **modes** are:

Thread mode — Used to execute application software. The processor enters Thread mode when it comes out of reset.

Handler mode — Used to handle exceptions. The processor returns to Thread mode when it has finished all exception processing.

28.4.1.2 Stacks

The processor uses a full descending stack. This means the stack pointer indicates the last stacked item on the stack memory. When the processor pushes a new item onto the stack, it decrements the stack pointer and then writes the item to the new memory location. The processor implements two stacks, the main stack and the process stack, with independent copies of the stack pointer, see Section 28.4.1.3.2.

In Thread mode, the CONTROL register controls whether the processor uses the main stack or the process stack, see Section 28–28.4.1.3.7. In Handler mode, the processor always uses the main stack. The options for processor operations are:

Table 418. Summary of processor mode and stack use options

Processor mode	Used to execute	Stack used
Thread	Applications	Main stack or process stack See Section 28–28.4.1.3.7
Handler	Exception handlers	Main stack

28.4.1.3 Core registers

The processor core registers are:

All information provided in this document is subject to legal disclaimers.
© NXP B.V. 2012. All rights reserved.

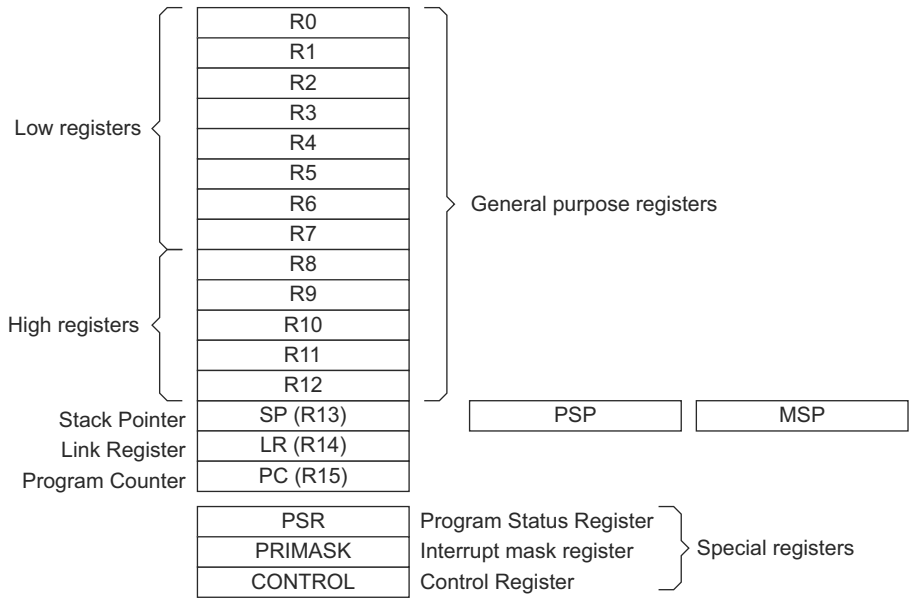

Fig 95. Processor core register set

Table 419. Core register set summary

Name	Type[1]	Reset value	Description
R0-R12	RW	Unknown	Section 28–28.4.1.3.1
MSP	RW	See description	Section 28–28.4.1.3.2
PSP	RW	Unknown	Section 28–28.4.1.3.2
LR	RW	Unknown	Section 28–28.4.1.3.3
PC	RW	See description	Section 28–28.4.1.3.4
PSR	RW	Unknown[2]	Table 28–420
APSR	RW	Unknown	Table 28–421
IPSR	RO	0x00000000	Table 422
EPSR	RO	Unknown[2]	Table 28–423
PRIMASK	RW	0x00000000	Table 28–424
CONTROL	RW	0x00000000	Table 28–425

[1] Describes access type during program execution in thread mode and Handler mode. Debug access can differ.

[2] Bit[24] is the T-bit and is loaded from bit[0] of the reset vector.

28.4.1.3.1 General-purpose registers

R0-R12 are 32-bit general-purpose registers for data operations.

28.4.1.3.2 Stack Pointer

The Stack Pointer (SP) is register R13. In Thread mode, bit[1] of the CONTROL register indicates the stack pointer to use:

- 0 = **Main Stack Pointer** (MSP). This is the reset value.
- 1 = **Process Stack Pointer** (PSP).

All information provided in this document is subject to legal disclaimers.

© NXP B.V. 2012. All rights reserved.

On reset, the processor loads the MSP with the value from address `0x00000000`.

28.4.1.3.3 Link Register

The **Link Register** (LR) is register R14. It stores the return information for subroutines, function calls, and exceptions. On reset, the LR value is Unknown.

28.4.1.3.4 Program Counter

The **Program Counter** (PC) is register R15. It contains the current program address. On reset, the processor loads the PC with the value of the reset vector, which is at address `0x00000004`. Bit[0] of the value is loaded into the EPSR T-bit at reset and must be 1.

28.4.1.3.5 Program Status Register

The **Program Status Register** (PSR) combines:

- **Application Program Status Register** (APSR)
- **Interrupt Program Status Register** (IPSR)
- **Execution Program Status Register** (EPSR).

These registers are mutually exclusive bitfields in the 32-bit PSR. The PSR bit assignments are:

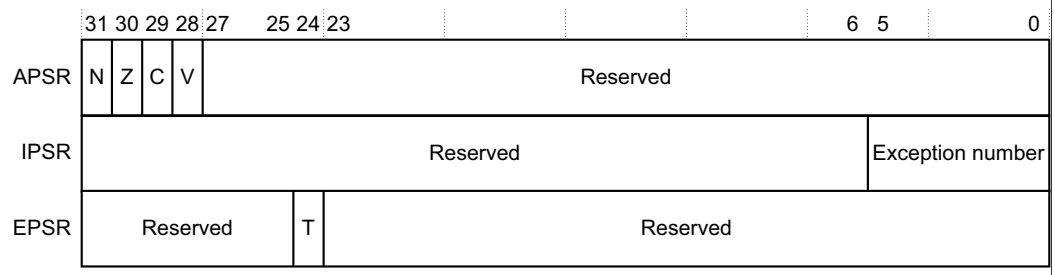

Fig 96. APSR, IPSR, EPSR register bit assignments

Access these registers individually or as a combination of any two or all three registers, using the register name as an argument to the `MSR` or `MRS` instructions. For example:

- read all of the registers using `PSR` with the `MRS` instruction
- write to the APSR using `APSR` with the `MSR` instruction.

The PSR combinations and attributes are:

Table 420. PSR register combinations

Register	Type	Combination
PSR	RW[1][2]	APSR, EPSR, and IPSR
IEPSR	RO	EPSR and IPSR
IAPSR	RW[1]	APSR and IPSR
EAPSR	RW[2]	APSR and EPSR

[1] The processor ignores writes to the IPSR bits.

[2] Reads of the EPSR bits return zero, and the processor ignores writes to the these bits

All information provided in this document is subject to legal disclaimers.

© NXP B.V. 2012. All rights reserved.

See the instruction descriptions Section 28–28.5.7.6 and Section 28–28.5.7.7 for more information about how to access the program status registers.

Application Program Status Register: The APSR contains the current state of the condition flags, from previous instruction executions. See the register summary in Table 28–419 for its attributes. The bit assignments are:

Table 421. APSR bit assignments

Bits	Name	Function
[31]	N	Negative flag
[30]	Z	Zero flag
[29]	C	Carry or borrow flag
[28]	V	Overflow flag
[27:0]	-	Reserved

See Section 28.5.4.1.4 for more information about the APSR negative, zero, carry or borrow, and overflow flags.

Interrupt Program Status Register: The IPSR contains the exception number of the current **Interrupt Service Routine** (ISR). See the register summary in Table 28–419 for its attributes. The bit assignments are:

Table 422. IPSR bit assignments

Bits	Name	Function
[31:6]	-	Reserved
[5:0]	Exception number	This is the number of the current exception: 0 = Thread mode 1 = Reserved 2 = NMI 3 = HardFault 4-10 = Reserved 11 = SVCall 12, 13 = Reserved 14 = PendSV 15 = SysTick 16 = IRQ0 . . . 47 = IRQ31 48-63 = Reserved. see Section 28–28.4.3.2 for more information.

Execution Program Status Register: The EPSR contains the Thumb state bit.

See the register summary in Table 28–419 for the EPSR attributes. The bit assignments are:

All information provided in this document is subject to legal disclaimers.
© NXP B.V. 2012. All rights reserved.

Table 423. EPSR bit assignments

Bits	Name	Function
[31:25]	-	Reserved
[24]	T	Thumb state bit
[23:0]	-	Reserved

Attempts by application software to read the EPSR directly using the `MRS` instruction always return zero. Attempts to write the EPSR using the `MSR` instruction are ignored. Fault handlers can examine the EPSR value in the stacked PSR to determine the cause of the fault. See Section 28–28.4.3.6. The following can clear the T bit to 0:

- instructions `BLX`, `BX` and `POP{PC}`
- restoration from the stacked xPSR value on an exception return
- bit[0] of the vector value on an exception entry.

Attempting to execute instructions when the T bit is 0 results in a HardFault or lockup. See Section 28–28.4.4.1 for more information.

Interruptible-restartable instructions: The interruptible-restartable instructions are `LDM` and `STM`. When an interrupt occurs during the execution of one of these instructions, the processor abandons execution of the instruction.

After servicing the interrupt, the processor restarts execution of the instruction from the beginning.

28.4.1.3.6 Exception mask register

The exception mask register disables the handling of exceptions by the processor. Disable exceptions where they might impact on timing critical tasks or code sequences requiring atomicity.

To disable or re-enable exceptions, use the `MSR` and `MRS` instructions, or the `CPS` instruction, to change the value of PRIMASK. See Section 28–28.5.7.6, Section 28–28.5.7.7, and Section 28–28.5.7.2 for more information.

Priority Mask Register: The PRIMASK register prevents activation of all exceptions with configurable priority. See the register summary in Table 28–419 for its attributes. The bit assignments are:

Table 424. PRIMASK register bit assignments

Bits	Name	Function
[31:1]	-	Reserved
[0]	PRIMASK	0 = no effect 1 = prevents the activation of all exceptions with configurable priority.

28.4.1.3.7 CONTROL register

The CONTROL register controls the stack used when the processor is in Thread mode. See the register summary in Table 28–419 for its attributes. The bit assignments are:

All information provided in this document is subject to legal disclaimers.
© NXP B.V. 2012. All rights reserved.

Table 425. CONTROL register bit assignments

Bits	Name	Function
[31:2]	-	Reserved
[1]	Active stack pointer	Defines the current stack: 0 = MSP is the current stack pointer 1 = PSP is the current stack pointer. In Handler mode this bit reads as zero and ignores writes.
[0]	-	Reserved.

Handler mode always uses the MSP, so the processor ignores explicit writes to the active stack pointer bit of the CONTROL register when in Handler mode. The exception entry and return mechanisms update the CONTROL register.

In an OS environment, it is recommended that threads running in Thread mode use the process stack and the kernel and exception handlers use the main stack.

By default, Thread mode uses the MSP. To switch the stack pointer used in Thread mode to the PSP, use the `MSR` instruction to set the Active stack pointer bit to 1, see Section 28–28.5.7.6.

Remark: When changing the stack pointer, software must use an `ISB` instruction immediately after the `MSR` instruction. This ensures that instructions after the ISB execute using the new stack pointer. See Section 28–28.5.7.5.

28.4.1.4 Exceptions and interrupts

The Cortex-M0 processor supports interrupts and system exceptions. The processor and the **Nested Vectored Interrupt Controller** (NVIC) prioritize and handle all exceptions. An interrupt or exception changes the normal flow of software control. The processor uses handler mode to handle all exceptions except for reset. See Section 28–28.4.3.6.1 and Section 28–28.4.3.6.2 for more information.

The NVIC registers control interrupt handling. See Section 28–28.6.2 for more information.

28.4.1.5 Data types

The processor:

- supports the following data types:
  - 32-bit words
  - 16-bit halfwords
  - 8-bit bytes
- manages all data memory accesses as little-endian. Instruction memory and **Private Peripheral Bus** (PPB) accesses are always little-endian. See Section 28–28.4.2.1 for more information.

28.4.1.6 The Cortex Microcontroller Software Interface Standard

ARM provides the **Cortex Microcontroller Software Interface Standard** (CMSIS) for programming Cortex-M0 microcontrollers. The CMSIS is an integrated part of the device driver library.

All information provided in this document is subject to legal disclaimers.
© NXP B.V. 2012. All rights reserved.

For a Cortex-M0 microcontroller system, CMSIS defines:

- a common way to:
  - access peripheral registers
  - define exception vectors
- the names of:
  - the registers of the core peripherals
  - the core exception vectors
- a device-independent interface for RTOS kernels.

The CMSIS includes address definitions and data structures for the core peripherals in the Cortex-M0 processor. It also includes optional interfaces for middleware components comprising a TCP/IP stack and a Flash file system.

The CMSIS simplifies software development by enabling the reuse of template code, and the combination of CMSIS-compliant software components from various middleware vendors. Software vendors can expand the CMSIS to include their peripheral definitions and access functions for those peripherals.

This document includes the register names defined by the CMSIS, and gives short descriptions of the CMSIS functions that address the processor core and the core peripherals.

Remark: This document uses the register short names defined by the CMSIS. In a few cases these differ from the architectural short names that might be used in other documents.

The following sections give more information about the CMSIS:

- Section 28.4.5.3 “Power management programming hints”
- Section 28.5.2 “Intrinsic functions”
- Section 28.6.2.1 “Accessing the Cortex-M0 NVIC registers using CMSIS”
- Section 28.6.2.8.1 “NVIC programming hints”.

28.4.2 Memory model

This section describes the processor memory map and the behavior of memory accesses. The processor has a fixed memory map that provides up to 4GB of addressable memory. The memory map is:

All information provided in this document is subject to legal disclaimers.
© NXP B.V. 2012. All rights reserved.

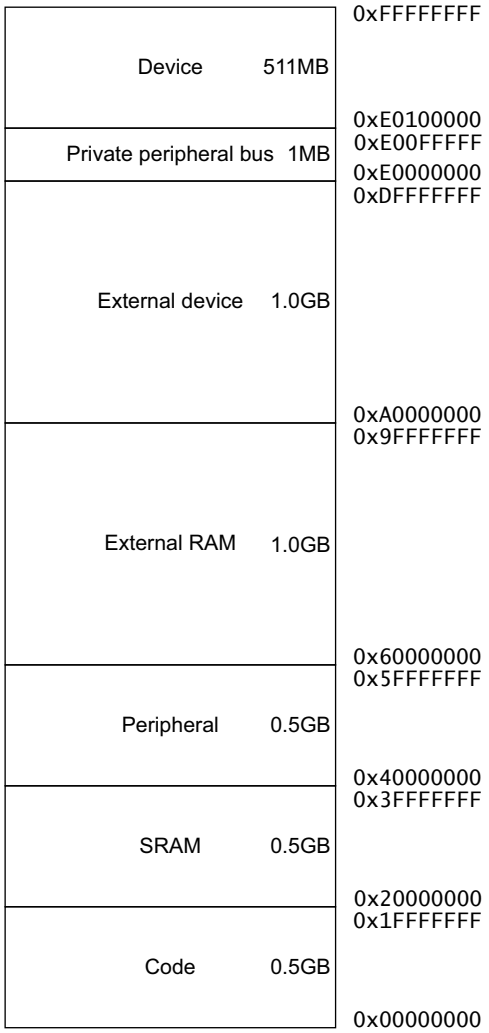

See Figure 6 for the LPC111x/LPC11Cxx specific implementation of the memory map. SRAM and code locations are different on the LPC111x/LPC11Cxx.

Fig 97. Generic ARM Cortex-M0 memory map

The processor reserves regions of the **Private peripheral bus** (PPB) address range for core peripheral registers, see Section 28–28.3.

28.4.2.1 Memory regions, types and attributes

The memory map is split into regions. Each region has a defined memory type, and some regions have additional memory attributes. The memory type and attributes determine the behavior of accesses to the region.

The memory types are:

Normal — The processor can re-order transactions for efficiency, or perform speculative reads.

Device — The processor preserves transaction order relative to other transactions to Device or Strongly-ordered memory.

All information provided in this document is subject to legal disclaimers.

© NXP B.V. 2012. All rights reserved.

Strongly-ordered — The processor preserves transaction order relative to all other transactions.

The different ordering requirements for Device and Strongly-ordered memory mean that the memory system can buffer a write to Device memory, but must not buffer a write to Strongly-ordered memory.

The additional memory attributes include.

Execute Never (XN) — Means the processor prevents instruction accesses. A HardFault exception is generated on executing an instruction fetched from an XN region of memory.

28.4.2.2 Memory system ordering of memory accesses

For most memory accesses caused by explicit memory access instructions, the memory system does not guarantee that the order in which the accesses complete matches the program order of the instructions, providing any re-ordering does not affect the behavior of the instruction sequence. Normally, if correct program execution depends on two memory accesses completing in program order, software must insert a memory barrier instruction between the memory access instructions, see Section 28–28.4.2.4.

However, the memory system does guarantee some ordering of accesses to Device and Strongly-ordered memory. For two memory access instructions A1 and A2, if A1 occurs before A2 in program order, the ordering of the memory accesses caused by two instructions is:

A1 \ A2	Normal access	Device access		Strongly-ordered access
		Non-shareable	Shareable	
Normal access	-	-	-	-
Device access, non-shareable	-	<	-	<
Device access, shareable	-	-	<	<
Strongly-ordered access	-	<	<	<

Fig 98. Memory ordering restrictions

Where:

- — Means that the memory system does not guarantee the ordering of the accesses.

< — Means that accesses are observed in program order, that is, A1 is always observed before A2.

28.4.2.3 Behavior of memory accesses

The behavior of accesses to each region in the memory map is:

All information provided in this document is subject to legal disclaimers.
© NXP B.V. 2012. All rights reserved.

Table 426. Memory access behavior

Address range	Memory region	Memory type[1]	XN[1]	Description
0x00000000-0x1FFFFFFF	Code	Normal	-	Executable region for program code. You can also put data here.
0x20000000-0x3FFFFFFF	SRAM	Normal	-	Executable region for data. You can also put code here.
0x40000000-0x5FFFFFFF	Peripheral	Device	XN	External device memory.
0x60000000-0x9FFFFFFF	External RAM	Normal	-	Executable region for data.
0xA0000000-0xDFFFFFFF	External device	Device	XN	External device memory.
0xE0000000-0xE00FFFFF	Private Peripheral Bus	Strongly-ordered	XN	This region includes the NVIC, System timer, and System Control Block. Only word accesses can be used in this region.
0xE0100000-0xFFFFFFFF	Device	Device	XN	Vendor specific.

[1] See Section 28–28.4.2.1 for more information.

The Code, SRAM, and external RAM regions can hold programs.

28.4.2.4 Software ordering of memory accesses

The order of instructions in the program flow does not always guarantee the order of the corresponding memory transactions. This is because:

- the processor can reorder some memory accesses to improve efficiency, providing this does not affect the behavior of the instruction sequence
- memory or devices in the memory map might have different wait states
- some memory accesses are buffered or speculative.

Section 28–28.4.2.2 describes the cases where the memory system guarantees the order of memory accesses. Otherwise, if the order of memory accesses is critical, software must include memory barrier instructions to force that ordering. The processor provides the following memory barrier instructions:

DMB — The **Data Memory Barrier** (DMB) instruction ensures that outstanding memory transactions complete before subsequent memory transactions. See Section 28–28.5.7.3.

DSB — The **Data Synchronization Barrier** (DSB) instruction ensures that outstanding memory transactions complete before subsequent instructions execute. See Section 28–28.5.7.4.

ISB — The **Instruction Synchronization Barrier** (ISB) ensures that the effect of all completed memory transactions is recognizable by subsequent instructions. See Section 28–28.5.7.5.

The following are examples of using memory barrier instructions:

All information provided in this document is subject to legal disclaimers.
© NXP B.V. 2012. All rights reserved.

Vector table — If the program changes an entry in the vector table, and then enables the corresponding exception, use a DMB instruction between the operations. This ensures that if the exception is taken immediately after being enabled the processor uses the new exception vector.

Self-modifying code — If a program contains self-modifying code, use an ISB instruction immediately after the code modification in the program. This ensures subsequent instruction execution uses the updated program.

Memory map switching — If the system contains a memory map switching mechanism, use a DSB instruction after switching the memory map. This ensures subsequent instruction execution uses the updated memory map.

Memory accesses to Strongly-ordered memory, such as the System Control Block, do not require the use of DMB instructions.

The processor preserves transaction order relative to all other transactions.

28.4.2.5 Memory endianness

The processor views memory as a linear collection of bytes numbered in ascending order from zero. For example, bytes 0-3 hold the first stored word, and bytes 4-7 hold the second stored word. Section 28–28.4.2.5.1 describes how words of data are stored in memory.

28.4.2.5.1 Little-endian format

In little-endian format, the processor stores the **least significant byte** (lsbyte) of a word at the lowest-numbered byte, and the **most significant byte** (msbyte) at the highest-numbered byte. For example:

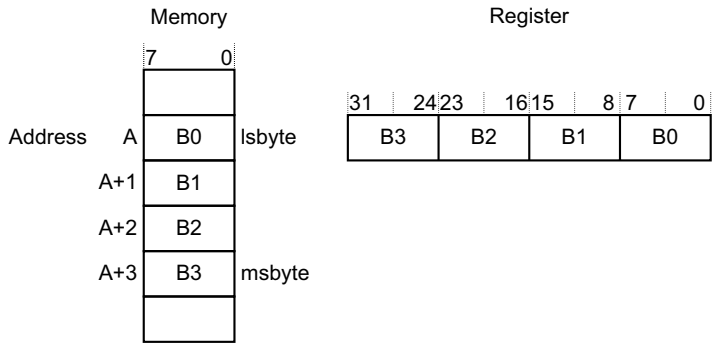

Fig 99. Little-endian format

28.4.3 Exception model

This section describes the exception model.

28.4.3.1 Exception states

Each exception is in one of the following states:

Inactive — The exception is not active and not pending.

Pending — The exception is waiting to be serviced by the processor.

All information provided in this document is subject to legal disclaimers.
© NXP B.V. 2012. All rights reserved.

An interrupt request from a peripheral or from software can change the state of the corresponding interrupt to pending.

Active — An exception that is being serviced by the processor but has not completed.

An exception handler can interrupt the execution of another exception handler. In this case both exceptions are in the active state.

Active and pending — The exception is being serviced by the processor and there is a pending exception from the same source.

28.4.3.2 Exception types

The exception types are:

Remark: See Section 28.1 for implementation of the NMI for specific parts.

Reset — Reset is invoked on power up or a warm reset. The exception model treats reset as a special form of exception. When reset is asserted, the operation of the processor stops, potentially at any point in an instruction. When reset is deasserted, execution restarts from the address provided by the reset entry in the vector table. Execution restarts in Thread mode.

NMI — A **NonMaskable Interrupt** (NMI) can be signalled by a peripheral or triggered by software. This is the highest priority exception other than reset. It is permanently enabled and has a fixed priority of –2. NMIs cannot be:

- masked or prevented from activation by any other exception
- preempted by any exception other than Reset.

HardFault — A HardFault is an exception that occurs because of an error during normal or exception processing. HardFaults have a fixed priority of -1, meaning they have higher priority than any exception with configurable priority.

SVCall — A **supervisor call** (SVC) is an exception that is triggered by the `SVC` instruction. In an OS environment, applications can use `SVC` instructions to access OS kernel functions and device drivers.

PendSV — PendSV is an interrupt-driven request for system-level service. In an OS environment, use PendSV for context switching when no other exception is active.

SysTick — A SysTick exception is an exception the system timer generates when it reaches zero. Software can also generate a SysTick exception. In an OS environment, the processor can use this exception as system tick.

Interrupt (IRQ) — An interrupt, or IRQ, is an exception signalled by a peripheral, or generated by a software request. All interrupts are asynchronous to instruction execution. In the system, peripherals use interrupts to communicate with the processor.

Table 427. Properties of different exception types

Exception number[1]	IRQ number[1]	Exception type	Priority	Vector address[2]
1	-	Reset	-3, the highest	`0x00000004`
2	-14	NMI	-2	`0x00000008`
3	-13	HardFault	-1	`0x0000000C`
4-10	-	Reserved	-	-
11	-5	SVCall	Configurable[3]	`0x0000002C`

All information provided in this document is subject to legal disclaimers.
© NXP B.V. 2012. All rights reserved.

Table 427. Properties of different exception types

Exception number[1]	IRQ number[1]	Exception type	Priority	Vector address[2]
12-13	-	Reserved	-	-
14	-2	PendSV	Configurable[3]	0x00000038
15	-1	SysTick	Configurable[3]	0x0000003C
16 and above	0 and above	Interrupt (IRQ)	Configurable[3]	0x00000040 and above[4]

[1] To simplify the software layer, the CMSIS only uses IRQ numbers and therefore uses negative values for exceptions other than interrupts. The IPSR returns the Exception number, see Table 28–422.

[2] See Section 28.4.3.4 for more information.

[3] See Section 28–28.6.2.6.

[4] Increasing in steps of 4.

For an asynchronous exception, other than reset, the processor can execute additional instructions between when the exception is triggered and when the processor enters the exception handler.

Privileged software can disable the exceptions that Table 28–427 shows as having configurable priority, see Section 28–28.6.2.3.

For more information about HardFaults, see Section 28–28.4.4.

28.4.3.3 Exception handlers

The processor handles exceptions using:

Interrupt Service Routines (ISRs) — Interrupts IRQ0 to IRQ31 are the exceptions handled by ISRs.

Fault handler — HardFault is the only exception handled by the fault handler.

System handlers — NMI, PendSV, SVCall SysTick, and HardFault are all system exceptions handled by system handlers.

28.4.3.4 Vector table

The vector table contains the reset value of the stack pointer, and the start addresses, also called exception vectors, for all exception handlers. Figure 28–100 shows the order of the exception vectors in the vector table. The least-significant bit of each vector must be 1, indicating that the exception handler is written in Thumb code.

All information provided in this document is subject to legal disclaimers.
© NXP B.V. 2012. All rights reserved.

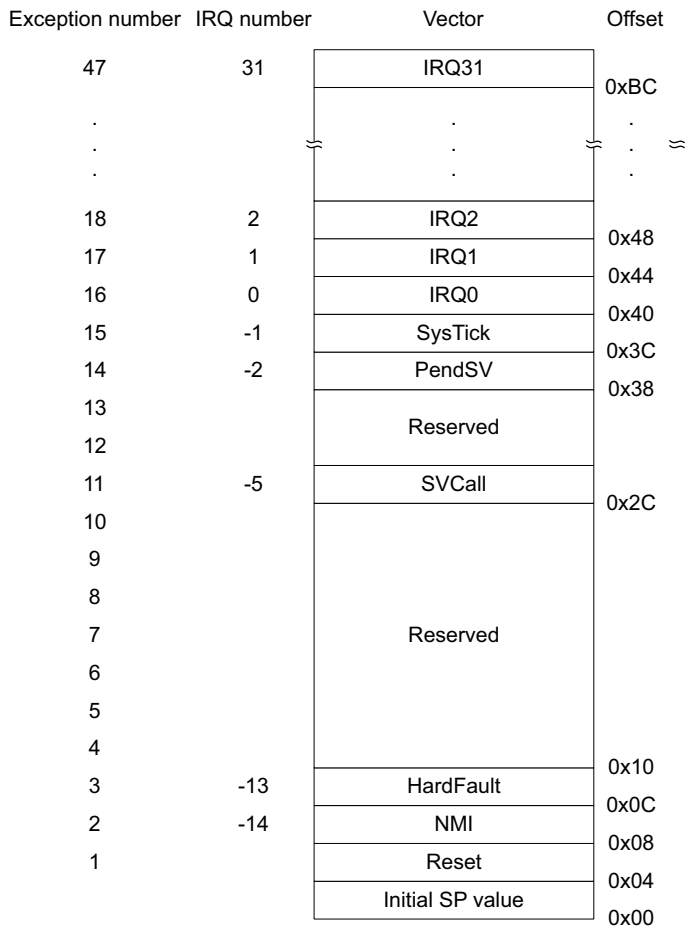

Fig 100. Vector table

The vector table is fixed at address `0x00000000`.

28.4.3.5 Exception priorities

As Table 28–427 shows, all exceptions have an associated priority, with:

- a lower priority value indicating a higher priority
- configurable priorities for all exceptions except Reset, HardFault, and NMI.

If software does not configure any priorities, then all exceptions with a configurable priority have a priority of 0. For information about configuring exception priorities see

- Section 28–28.6.3.7
- Section 28–28.6.2.6.

Remark: Configurable priority values are in the range 0-3. The Reset, HardFault, and NMI exceptions, with fixed negative priority values, always have higher priority than any other exception.

All information provided in this document is subject to legal disclaimers.

© NXP B.V. 2012. All rights reserved.

Assigning a higher priority value to IRQ[0] and a lower priority value to IRQ[1] means that IRQ[1] has higher priority than IRQ[0]. If both IRQ[1] and IRQ[0] are asserted, IRQ[1] is processed before IRQ[0].

If multiple pending exceptions have the same priority, the pending exception with the lowest exception number takes precedence. For example, if both IRQ[0] and IRQ[1] are pending and have the same priority, then IRQ[0] is processed before IRQ[1].

When the processor is executing an exception handler, the exception handler is preempted if a higher priority exception occurs. If an exception occurs with the same priority as the exception being handled, the handler is not preempted, irrespective of the exception number. However, the status of the new interrupt changes to pending.

28.4.3.6 Exception entry and return

Descriptions of exception handling use the following terms:

Preemption — When the processor is executing an exception handler, an exception can preempt the exception handler if its priority is higher than the priority of the exception being handled.

When one exception preempts another, the exceptions are called nested exceptions. See Section 28–28.4.3.6.1 for more information.

Return — This occurs when the exception handler is completed, and:

- there is no pending exception with sufficient priority to be serviced
- the completed exception handler was not handling a late-arriving exception.

The processor pops the stack and restores the processor state to the state it had before the interrupt occurred. See Section 28–28.4.3.6.2 for more information.

Tail-chaining — This mechanism speeds up exception servicing. On completion of an exception handler, if there is a pending exception that meets the requirements for exception entry, the stack pop is skipped and control transfers to the new exception handler.

Late-arriving — This mechanism speeds up preemption. If a higher priority exception occurs during state saving for a previous exception, the processor switches to handle the higher priority exception and initiates the vector fetch for that exception. State saving is not affected by late arrival because the state saved would be the same for both exceptions. On return from the exception handler of the late-arriving exception, the normal tail-chaining rules apply.

28.4.3.6.1 Exception entry

Exception entry occurs when there is a pending exception with sufficient priority and either:

- the processor is in Thread mode
- the new exception is of higher priority than the exception being handled, in which case the new exception preempts the exception being handled.

When one exception preempts another, the exceptions are nested.

All information provided in this document is subject to legal disclaimers.
© NXP B.V. 2012. All rights reserved.

Sufficient priority means the exception has greater priority than any limit set by the mask register, see Section 28–28.4.1.3.6. An exception with less priority than this is pending but is not handled by the processor.

When the processor takes an exception, unless the exception is a tail-chained or a late-arriving exception, the processor pushes information onto the current stack. This operation is referred to as **stacking** and the structure of eight data words is referred as a **stack frame**. The stack frame contains the following information:

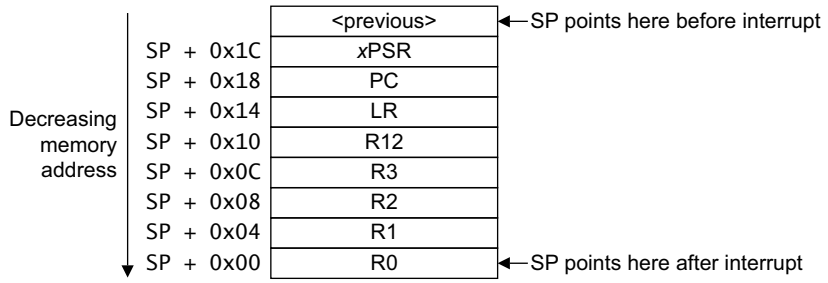

Fig 101. Exception entry stack contents

Immediately after stacking, the stack pointer indicates the lowest address in the stack frame. The stack frame is aligned to a double-word address.

The stack frame includes the return address. This is the address of the next instruction in the interrupted program. This value is restored to the PC at exception return so that the interrupted program resumes.

The processor performs a vector fetch that reads the exception handler start address from the vector table. When stacking is complete, the processor starts executing the exception handler. At the same time, the processor writes an EXC_RETURN value to the LR. This indicates which stack pointer corresponds to the stack frame and what operation mode the processor was in before the entry occurred.

If no higher priority exception occurs during exception entry, the processor starts executing the exception handler and automatically changes the status of the corresponding pending interrupt to active.

If another higher priority exception occurs during exception entry, the processor starts executing the exception handler for this exception and does not change the pending status of the earlier exception. This is the late arrival case.

28.4.3.6.2 Exception return

Exception return occurs when the processor is in Handler mode and execution of one of the following instructions attempts to set the PC to an EXC_RETURN value:

- a `POP` instruction that loads the PC
- a `BX` instruction using any register.

The processor saves an EXC_RETURN value to the LR on exception entry. The exception mechanism relies on this value to detect when the processor has completed an exception handler. Bits[31:4] of an EXC_RETURN value are `0xFFFFFFF`. When the processor loads a value matching this pattern to the PC it detects that the operation is a

All information provided in this document is subject to legal disclaimers.

© NXP B.V. 2012. All rights reserved.

not a normal branch operation and, instead, that the exception is complete. Therefore, it starts the exception return sequence. Bits[3:0] of the EXC_RETURN value indicate the required return stack and processor mode, as Table 28–428 shows.

Table 428. Exception return behavior

EXC_RETURN	Description
0xFFFFFFF1	Return to Handler mode. Exception return gets state from the main stack. Execution uses MSP after return.
0xFFFFFFF9	Return to Thread mode. Exception return gets state from MSP. Execution uses MSP after return.
0xFFFFFFFD	Return to Thread mode. Exception return gets state from PSP. Execution uses PSP after return.
All other values	Reserved.

28.4.4 Fault handling

Faults are a subset of exceptions, see Section 28–28.4.3. All faults result in the HardFault exception being taken or cause lockup if they occur in the NMI or HardFault handler. The faults are:

- execution of an SVC instruction at a priority equal or higher than SVCall
- execution of a BKPT instruction without a debugger attached
- a system-generated bus error on a load or store
- execution of an instruction from an XN memory address
- execution of an instruction from a location for which the system generates a bus fault
- a system-generated bus error on a vector fetch
- execution of an Undefined instruction
- execution of an instruction when not in Thumb-State as a result of the T-bit being previously cleared to 0
- an attempted load or store to an unaligned address.

Remark: Only Reset and NMI can preempt the fixed priority HardFault handler. A HardFault can preempt any exception other than Reset, NMI, or another hard fault.

28.4.4.1 Lockup

The processor enters a lockup state if a fault occurs when executing the NMI or HardFault handlers, or if the system generates a bus error when unstacking the PSR on an exception return using the MSP. When the processor is in lockup state it does not execute any instructions. The processor remains in lockup state until one of the following occurs:

- it is reset
- a debugger halts it
- an NMI occurs and the current lockup is in the HardFault handler.

All information provided in this document is subject to legal disclaimers. © NXP B.V. 2012. All rights reserved.

Remark: If lockup state occurs in the NMI handler a subsequent NMI does not cause the processor to leave lockup state.

28.4.5 Power management

The Cortex-M0 processor sleep modes reduce power consumption:

- a sleep mode, that stops the processor clock
- a Deep-sleep mode.

The SLEEPDEEP bit of the SCR selects which sleep mode is used, see Section 28–28.6.3.5.

This section describes the mechanisms for entering sleep mode and the conditions for waking up from sleep mode.

28.4.5.1 Entering sleep mode

This section describes the mechanisms software can use to put the processor into sleep mode.

The system can generate spurious wake-up events, for example a debug operation wakes up the processor. Therefore software must be able to put the processor back into sleep mode after such an event. A program might have an idle loop to put the processor back in to sleep mode.

28.4.5.1.1 Wait for interrupt

The Wait For Interrupt instruction, `WFI`, causes immediate entry to sleep mode. When the processor executes a `WFI` instruction it stops executing instructions and enters sleep mode. See Section 28–28.5.7.12 for more information.

28.4.5.1.2 Wait for event

Remark: The WFE instruction is not implemented on the LPC111x/LPC11Cxx.

The Wait For Event instruction, `WFE`, causes entry to sleep mode conditional on the value of a one-bit event register. When the processor executes a `WFE` instruction, it checks the value of the event register:

0 — The processor stops executing instructions and enters sleep mode

1 — The processor sets the register to zero and continues executing instructions without entering sleep mode.

See Section 28–28.5.7.11 for more information.

If the event register is 1, this indicates that the processor must not enter sleep mode on execution of a `WFE` instruction. Typically, this is because of the assertion of an external event, or because another processor in the system has executed a `SEV` instruction, see Section 28–28.5.7.9. Software cannot access this register directly.

All information provided in this document is subject to legal disclaimers.
© NXP B.V. 2012. All rights reserved.

28.4.5.1.3 Sleep-on-exit

If the SLEEPONEXIT bit of the SCR is set to 1, when the processor completes the execution of an exception handler and returns to Thread mode it immediately enters sleep mode. Use this mechanism in applications that only require the processor to run when an interrupt occurs.

28.4.5.2 Wake-up from sleep mode

The conditions for the processor to wake-up depend on the mechanism that caused it to enter sleep mode.

28.4.5.2.1 Wake-up from WFI or sleep-on-exit

Normally, the processor wakes up only when it detects an exception with sufficient priority to cause exception entry.

Some embedded systems might have to execute system restore tasks after the processor wakes up, and before it executes an interrupt handler. To achieve this set the PRIMASK bit to 1. If an interrupt arrives that is enabled and has a higher priority than current exception priority, the processor wakes up but does not execute the interrupt handler until the processor sets PRIMASK to zero. For more information about PRIMASK, see Section 28–28.4.1.3.6.

28.4.5.2.2 Wake-up from WFE

The processor wakes up if:

- it detects an exception with sufficient priority to cause exception entry
- in a multiprocessor system, another processor in the system executes a `SEV` instruction.

In addition, if the SEVONPEND bit in the SCR is set to 1, any new pending interrupt triggers an event and wakes up the processor, even if the interrupt is disabled or has insufficient priority to cause exception entry. For more information about the SCR see Section 28–28.6.3.5.

28.4.5.3 Power management programming hints

ISO/IEC C cannot directly generate the `WFI`, `WFE`, and `SEV` instructions. The CMSIS provides the following intrinsic functions for these instructions:

```
void __WFE(void) // Wait for Event

void __WFI(void) // Wait for Interrupt

void __SEV(void) // Send Event
```

28.5 Instruction set

28.5.1 Instruction set summary

The processor implements a version of the Thumb instruction set. Table 429 lists the supported instructions.

Remark: In Table 429

All information provided in this document is subject to legal disclaimers. © NXP B.V. 2012. All rights reserved.

- angle brackets, <>, enclose alternative forms of the operand
- braces, {}, enclose optional operands and mnemonic parts
- the Operands column is not exhaustive.

For more information on the instructions and operands, see the instruction descriptions.

Table 429. Cortex-M0 instructions

Mnemonic	Operands	Brief description	Flags	Reference
ADCS	*{Rd,} Rn, Rm*	Add with Carry	N,Z,C,V	Section 28–28.5.5.1
ADD{S}	*{Rd,} Rn, <Rm|#imm>*	Add	N,Z,C,V	Section 28–28.5.5.1
ADR	*Rd, label*	PC-relative Address to Register	-	Section 28–28.5.4.1
ANDS	*{Rd,} Rn, Rm*	Bitwise AND	N,Z	Section 28–28.5.5.1
ASRS	*{Rd,} Rm, <Rs|#imm>*	Arithmetic Shift Right	N,Z,C	Section 28–28.5.5.3
B{cc}	*label*	Branch {conditionally}	-	Section 28–28.5.6.1
BICS	*{Rd,} Rn, Rm*	Bit Clear	N,Z	Section 28–28.5.5.2
BKPT	*#imm*	Breakpoint	-	Section 28–28.5.7.1
BL	*label*	Branch with Link	-	Section 28–28.5.6.1
BLX	*Rm*	Branch indirect with Link	-	Section 28–28.5.6.1
BX	*Rm*	Branch indirect	-	Section 28–28.5.6.1
CMN	*Rn, Rm*	Compare Negative	N,Z,C,V	Section 28–28.5.5.4
CMP	*Rn, <Rm|#imm>*	Compare	N,Z,C,V	Section 28–28.5.5.4
CPSID	*i*	Change Processor State, Disable Interrupts	-	Section 28–28.5.7.2
CPSIE	*i*	Change Processor State, Enable Interrupts	-	Section 28–28.5.7.2
DMB	-	Data Memory Barrier	-	Section 28–28.5.7.3
DSB	-	Data Synchronization Barrier	-	Section 28–28.5.7.4
EORS	*{Rd,} Rn, Rm*	Exclusive OR	N,Z	Section 28–28.5.5.2
ISB	-	Instruction Synchronization Barrier	-	Section 28–28.5.7.5
LDM	*Rn{!}, reglist*	Load Multiple registers, increment after	-	Section 28–28.5.4.5
LDR	*Rt, label*	Load Register from PC-relative address	-	Section 28–28.5.4
LDR	*Rt, [Rn, <Rm|#imm>]*	Load Register with word	-	Section 28–28.5.4
LDRB	*Rt, [Rn, <Rm|#imm>]*	Load Register with byte	-	Section 28–28.5.4
LDRH	*Rt, [Rn, <Rm|#imm>]*	Load Register with halfword	-	Section 28–28.5.4
LDRSB	*Rt, [Rn, <Rm|#imm>]*	Load Register with signed byte	-	Section 28–28.5.4
LDRSH	*Rt, [Rn, <Rm|#imm>]*	Load Register with signed halfword	-	Section 28–28.5.4
LSLS	*{Rd,} Rn, <Rs|#imm>*	Logical Shift Left	N,Z,C	Section 28–28.5.5.3
U	*{Rd,} Rn, <Rs|#imm>*	Logical Shift Right	N,Z,C	Section 28–28.5.5.3
MOV{S}	*Rd, Rm*	Move	N,Z	Section 28–28.5.5.5
MRS	*Rd, spec_reg*	Move to general register from special register	-	Section 28–28.5.7.6
MSR	*spec_reg, Rm*	Move to special register from general register	N,Z,C,V	Section 28–28.5.7.7
MULS	*Rd, Rn, Rm*	Multiply, 32-bit result	N,Z	Section 28–28.5.5.6
MVNS	*Rd, Rm*	Bitwise NOT	N,Z	Section 28–28.5.5.5

All information provided in this document is subject to legal disclaimers.
© NXP B.V. 2012. All rights reserved.

Table 429. Cortex-M0 instructions

Mnemonic	Operands	Brief description	Flags	Reference
NOP	-	No Operation	-	Section 28–28.5.7.8
ORRS	*{Rd,} Rn, Rm*	Logical OR	N,Z	Section 28–28.5.5.2
POP	*reglist*	Pop registers from stack	-	Section 28–28.5.4.6
PUSH	*reglist*	Push registers onto stack	-	Section 28–28.5.4.6
REV	*Rd, Rm*	Byte-Reverse word	-	Section 28–28.5.5.7
REV16	*Rd, Rm*	Byte-Reverse packed halfwords	-	Section 28–28.5.5.7
REVSH	*Rd, Rm*	Byte-Reverse signed halfword	-	Section 28–28.5.5.7
RORS	*{Rd,} Rn, Rs*	Rotate Right	N,Z,C	Section 28–28.5.5.3
RSBS	*{Rd,} Rn, #0*	Reverse Subtract	N,Z,C,V	Section 28–28.5.5.1
SBCS	*{Rd,} Rn, Rm*	Subtract with Carry	N,Z,C,V	Section 28–28.5.5.1
SEV	-	Send Event	-	Section 28–28.5.7.9
STM	*Rn!, reglist*	Store Multiple registers, increment after	-	Section 28–28.5.4.5
STR	*Rt, [Rn, <Rm|#imm>]*	Store Register as word	-	Section 28–28.5.4
STRB	*Rt, [Rn, <Rm|#imm>]*	Store Register as byte	-	Section 28–28.5.4
STRH	*Rt, [Rn, <Rm|#imm>]*	Store Register as halfword	-	Section 28–28.5.4
SUB{S}	*{Rd,} Rn, <Rm|#imm>*	Subtract	N,Z,C,V	Section 28–28.5.5.1
SVC	*#imm*	Supervisor Call	-	Section 28–28.5.7.10
SXTB	*Rd, Rm*	Sign extend byte	-	Section 28–28.5.5.8
SXTH	*Rd, Rm*	Sign extend halfword	-	Section 28–28.5.5.8
TST	*Rn, Rm*	Logical AND based test	N,Z	Section 28–28.5.5.9
UXTB	*Rd, Rm*	Zero extend a byte	-	Section 28–28.5.5.8
UXTH	*Rd, Rm*	Zero extend a halfword	-	Section 28–28.5.5.8
WFE	-	Wait For Event	-	Section 28–28.5.7.11
WFI	-	Wait For Interrupt	-	Section 28–28.5.7.12

28.5.2 Intrinsic functions

ISO/IEC C code cannot directly access some Cortex-M0 instructions. This section describes intrinsic functions that can generate these instructions, provided by the CMSIS and that might be provided by a C compiler. If a C compiler does not support an appropriate intrinsic function, you might have to use inline assembler to access the relevant instruction.

The CMSIS provides the following intrinsic functions to generate instructions that ISO/IEC C code cannot directly access:

Table 430. CMSIS intrinsic functions to generate some Cortex-M0 instructions

Instruction	CMSIS intrinsic function
CPSIE i	void __enable_irq(void)
CPSID i	void __disable_irq(void)
ISB	void __ISB(void)
DSB	void __DSB(void)
DMB	void __DMB(void)
NOP	void __NOP(void)

All information provided in this document is subject to legal disclaimers. © NXP B.V. 2012. All rights reserved.

Table 430. CMSIS intrinsic functions to generate some Cortex-M0 instructions

Instruction	CMSIS intrinsic function
REV	uint32_t __REV(uint32_t int value)
REV16	uint32_t __REV16(uint32_t int value)
REVSH	uint32_t __REVSH(uint32_t int value)
SEV	void __SEV(void)
WFE	void __WFE(void)
WFI	void __WFI(void)

The CMSIS also provides a number of functions for accessing the special registers using MRS and MSR instructions:

Table 431. CMSIS intrinsic functions to access the special registers

Special register	Access	CMSIS function
PRIMASK	Read	uint32_t __get_PRIMASK (void)
	Write	void __set_PRIMASK (uint32_t value)
CONTROL	Read	uint32_t __get_CONTROL (void)
	Write	void __set_CONTROL (uint32_t value)
MSP	Read	uint32_t __get_MSP (void)
	Write	void __set_MSP (uint32_t TopOfMainStack)
PSP	Read	uint32_t __get_PSP (void)
	Write	void __set_PSP (uint32_t TopOfProcStack)

28.5.3 About the instruction descriptions

The following sections give more information about using the instructions:

- Section 28.5.3.1 “Operands”
- Section 28.5.3.2 “Restrictions when using PC or SP”
- Section 28.5.3.3 “Shift Operations”
- Section 28.5.3.4 “Address alignment”
- Section 28.5.3.5 “PC-relative expressions”
- Section 28.5.3.6 “Conditional execution”.

28.5.3.1 Operands

An instruction operand can be an ARM register, a constant, or another instruction-specific parameter. Instructions act on the operands and often store the result in a destination register. When there is a destination register in the instruction, it is usually specified before the other operands.

28.5.3.2 Restrictions when using PC or SP

Many instructions are unable to use, or have restrictions on whether you can use, the **Program Counter** (PC) or **Stack Pointer** (SP) for the operands or destination register. See instruction descriptions for more information.

All information provided in this document is subject to legal disclaimers.
© NXP B.V. 2012. All rights reserved.

Remark: When you update the PC with a BX, BLX, or POP instruction, bit[0] of any address must be 1 for correct execution. This is because this bit indicates the destination instruction set, and the Cortex-M0 processor only supports Thumb instructions. When a BL or BLX instruction writes the value of bit[0] into the LR it is automatically assigned the value 1.

28.5.3.3 Shift Operations

Register shift operations move the bits in a register left or right by a specified number of bits, the **shift length**. Register shift can be performed directly by the instructions ASR, LSR, LSL, and ROR and the result is written to a destination register.The permitted shift lengths depend on the shift type and the instruction, see the individual instruction description. If the shift length is 0, no shift occurs. Register shift operations update the carry flag except when the specified shift length is 0. The following sub-sections describe the various shift operations and how they affect the carry flag. In these descriptions, *Rm* is the register containing the value to be shifted, and *n* is the shift length.

28.5.3.3.1 ASR

Arithmetic shift right by *n* bits moves the left-hand 32 -*n* bits of the register *Rm*, to the right by *n* places, into the right-hand 32 -*n* bits of the result, and it copies the original bit[31] of the register into the left-hand *n* bits of the result. See Figure 28–102.

You can use the ASR operation to divide the signed value in the register *Rm* by 2^n, with the result being rounded towards negative-infinity.

When the instruction is ASRS the carry flag is updated to the last bit shifted out, bit[*n*-1], of the register *Rm*.

Remark:

- If *n* is 32 or more, then all the bits in the result are set to the value of bit[31] of *Rm*.
- If *n* is 32 or more and the carry flag is updated, it is updated to the value of bit[31] of *Rm*.

Fig 102. ASR #3

28.5.3.3.2 LSR

Logical shift right by *n* bits moves the left-hand 32-*n* bits of the register *Rm*, to the right by *n* places, into the right-hand 32 -*n* bits of the result, and it sets the left-hand *n* bits of the result to 0. See Figure 103.

All information provided in this document is subject to legal disclaimers.
© NXP B.V. 2012. All rights reserved.

You can use the LSR operation to divide the value in the register *Rm* by 2^n, if the value is regarded as an unsigned integer.

When the instruction is LSRS, the carry flag is updated to the last bit shifted out, bit[*n*-1], of the register *Rm*.

Remark:

- If *n* is 32 or more, then all the bits in the result are cleared to 0.
- If *n* is 33 or more and the carry flag is updated, it is updated to 0.

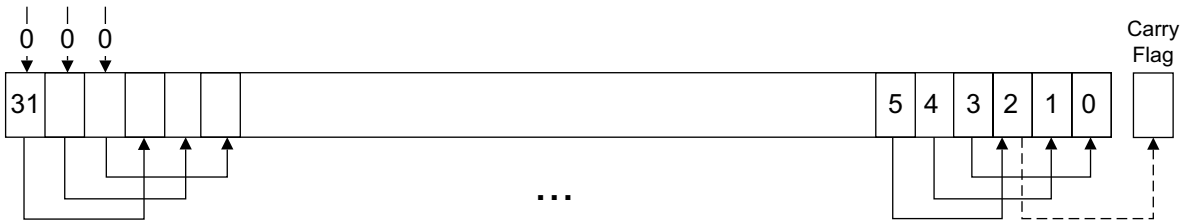

Fig 103. LSR #3

28.5.3.3.3 LSL

Logical shift left by *n* bits moves the right-hand 32-*n* bits of the register *Rm*, to the left by *n* places, into the left-hand 32-*n* bits of the result, and it sets the right-hand *n* bits of the result to 0. See Figure 104.

You can use the LSL operation to multiply the value in the register *Rm* by 2^n, if the value is regarded as an unsigned integer or a two's complement signed integer. Overflow can occur without warning.

When the instruction is LSLS the carry flag is updated to the last bit shifted out, bit[32-*n*], of the register *Rm*. These instructions do not affect the carry flag when used with LSL #0.

Remark:

- If *n* is 32 or more, then all the bits in the result are cleared to 0.
- If *n* is 33 or more and the carry flag is updated, it is updated to 0.

Fig 104. LSL #3

All information provided in this document is subject to legal disclaimers.
© NXP B.V. 2012. All rights reserved.

28.5.3.3.4 ROR

Rotate right by *n* bits moves the left-hand 32-*n* bits of the register *Rm*, to the right by *n* places, into the right-hand 32-*n* bits of the result, and it moves the right-hand *n* bits of the register into the left-hand *n* bits of the result. See Figure 28–105.

When the instruction is RORS the carry flag is updated to the last bit rotation, bit[*n*-1], of the register *Rm*.

Remark:

- If *n* is 32, then the value of the result is same as the value in *Rm*, and if the carry flag is updated, it is updated to bit[31] of *Rm*.
- ROR

  with shift length, *n*, greater than 32 is the same as

  ROR

  with shift length *n*-32.

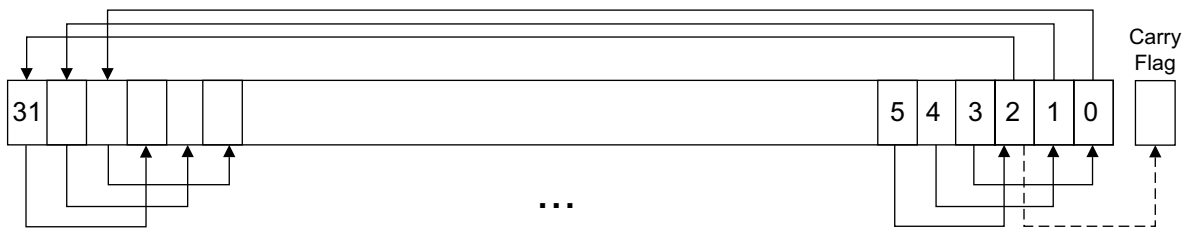

Fig 105. ROR #3

28.5.3.4 Address alignment

An aligned access is an operation where a word-aligned address is used for a word, or multiple word access, or where a halfword-aligned address is used for a halfword access. Byte accesses are always aligned.

There is no support for unaligned accesses on the Cortex-M0 processor. Any attempt to perform an unaligned memory access operation results in a HardFault exception.

28.5.3.5 PC-relative expressions

A PC-relative expression or **label** is a symbol that represents the address of an instruction or literal data. It is represented in the instruction as the PC value plus or minus a numeric offset. The assembler calculates the required offset from the label and the address of the current instruction. If the offset is too big, the assembler produces an error.

Remark:

- For most instructions, the value of the PC is the address of the current instruction plus 4 bytes.
- Your assembler might permit other syntaxes for PC-relative expressions, such as a label plus or minus a number, or an expression of the form [PC, #*imm*].

All information provided in this document is subject to legal disclaimers.
© NXP B.V. 2012. All rights reserved.

28.5.3.6 Conditional execution

Most data processing instructions update the condition flags in the **Application Program Status Register** (APSR) according to the result of the operation, see Section . Some instructions update all flags, and some only update a subset. If a flag is not updated, the original value is preserved. See the instruction descriptions for the flags they affect.

You can execute a conditional branch instruction, based on the condition flags set in another instruction, either:

- immediately after the instruction that updated the flags
- after any number of intervening instructions that have not updated the flags.

On the Cortex-M0 processor, conditional execution is available by using conditional branches.

This section describes:

- Section 28.5.3.6.1 “The condition flags”
- Section 28.5.3.6.2 “Condition code suffixes”.

28.5.3.6.1 The condition flags

The APSR contains the following condition flags:

N — Set to 1 when the result of the operation was negative, cleared to 0 otherwise.

Z — Set to 1 when the result of the operation was zero, cleared to 0 otherwise.

C — Set to 1 when the operation resulted in a carry, cleared to 0 otherwise.

V — Set to 1 when the operation caused overflow, cleared to 0 otherwise.

For more information about the APSR see Section 28–28.4.1.3.5.

A carry occurs:

- if the result of an addition is greater than or equal to 2^{32}
- if the result of a subtraction is positive or zero
- as the result of a shift or rotate instruction.

Overflow occurs when the sign of the result, in bit[31], does not match the sign of the result had the operation been performed at infinite precision, for example:

- if adding two negative values results in a positive value
- if adding two positive values results in a negative value
- if subtracting a positive value from a negative value generates a positive value
- if subtracting a negative value from a positive value generates a negative value.

The Compare operations are identical to subtracting, for CMP, or adding, for CMN, except that the result is discarded. See the instruction descriptions for more information.

28.5.3.6.2 Condition code suffixes

Conditional branch is shown in syntax descriptions as B{*cond*}. A branch instruction with a condition code is only taken if the condition code flags in the APSR meet the specified condition, otherwise the branch instruction is ignored. shows the condition codes to use.

All information provided in this document is subject to legal disclaimers.
© NXP B.V. 2012. All rights reserved.

Table 432 also shows the relationship between condition code suffixes and the N, Z, C, and V flags.

Table 432. Condition code suffixes

Suffix	Flags	Meaning
EQ	Z = 1	Equal, last flag setting result was zero
NE	Z = 0	Not equal, last flag setting result was non-zero
CS or HS	C = 1	Higher or same, unsigned
CC or LO	C = 0	Lower, unsigned
MI	N = 1	Negative
PL	N = 0	Positive or zero
VS	V = 1	Overflow
VC	V = 0	No overflow
HI	C = 1 and Z = 0	Higher, unsigned
LS	C = 0 or Z = 1	Lower or same, unsigned
GE	N = V	Greater than or equal, signed
LT	N != V	Less than, signed
GT	Z = 0 and N = V	Greater than, signed
LE	Z = 1 and N != V	Less than or equal, signed
AL	Can have any value	Always. This is the default when no suffix is specified.

28.5.4 Memory access instructions

Table 433 shows the memory access instructions:

Table 433. Access instructions

Mnemonic	Brief description	See
LDR{type}	Load Register using register offset	Section 28–28.5.4.3
LDR	Load Register from PC-relative address	Section 28–28.5.4.4
POP	Pop registers from stack	Section 28–28.5.4.6
PUSH	Push registers onto stack	Section 28–28.5.4.6
STM	Store Multiple registers	Section 28–28.5.4.5
STR{type}	Store Register using immediate offset	Section 28–28.5.4.2
STR{type}	Store Register using register offset	Section 28–28.5.4.3

28.5.4.1 ADR

Generates a PC-relative address.

28.5.4.1.1 Syntax

ADR *Rd*, *label*

All information provided in this document is subject to legal disclaimers.
© NXP B.V. 2012. All rights reserved.

where:

Rd is the destination register.

label is a PC-relative expression. See Section 28–28.5.3.5.

28.5.4.1.2 Operation

ADR generates an address by adding an immediate value to the PC, and writes the result to the destination register.

ADR facilitates the generation of position-independent code, because the address is PC-relative.

If you use ADR to generate a target address for a BX or BLX instruction, you must ensure that bit[0] of the address you generate is set to 1 for correct execution.

28.5.4.1.3 Restrictions

In this instruction *Rd* must specify R0-R7. The data-value addressed must be word aligned and within 1020 bytes of the current PC.

28.5.4.1.4 Condition flags

This instruction does not change the flags.

28.5.4.1.5 Examples

```
ADR    R1, TextMessage   ; Write address value of a location labelled as
                         ; TextMessage to R1

ADR    R3, [PC,#996]     ; Set R3 to value of PC + 996.
```

28.5.4.2 LDR and STR, immediate offset

Load and Store with immediate offset.

28.5.4.2.1 Syntax

LDR *Rt*, [<*Rn* | SP> {, *#imm*}]

LDR<B|H> *Rt*, [*Rn* {, *#imm*}]

STR *Rt*, [<*Rn* | SP>, {,*#imm*}]

STR<B|H> *Rt*, [*Rn* {,*#imm*}]

where:

Rt is the register to load or store.

Rn is the register on which the memory address is based.

imm is an offset from *Rn*. If *imm* is omitted, it is assumed to be zero.

28.5.4.2.2 Operation

LDR, LDRB and LDRH instructions load the register specified by *Rt* with either a word, byte or halfword data value from memory. Sizes less than word are zero extended to 32-bits before being written to the register specified by *Rt*.

All information provided in this document is subject to legal disclaimers.
© NXP B.V. 2012. All rights reserved.

STR, STRB and STRH instructions store the word, least-significant byte or lower halfword contained in the single register specified by *Rt* in to memory. The memory address to load from or store to is the sum of the value in the register specified by either *Rn* or SP and the immediate value *imm*.

28.5.4.2.3 Restrictions

In these instructions:

- *Rt* and *Rn* must only specify R0-R7.
- *imm* must be between:
  - 0 and 1020 and an integer multiple of four for LDR and STR using SP as the base register
  - 0 and 124 and an integer multiple of four for LDR and STR using R0-R7 as the base register
  - 0 and 62 and an integer multiple of two for LDRH and STRH
  - 0 and 31 for LDRB and STRB.
- The computed address must be divisible by the number of bytes in the transaction, see Section 28–28.5.3.4.

28.5.4.2.4 Condition flags

These instructions do not change the flags.

28.5.4.2.5 Examples

```
LDR     R4, [R7              ; Loads R4 from the address in R7.
    STR     R2, [R0,#const-struc]  ; const-struc is an expression evaluating
                                   ; to a constant in the range 0-1020.
```

28.5.4.3 LDR and STR, register offset

Load and Store with register offset.

28.5.4.3.1 Syntax

LDR *Rt*, [*Rn*, *Rm*]

LDR<B|H> *Rt*, [*Rn*, *Rm*]

LDR<SB|SH> *Rt*, [*Rn*, *Rm*]

STR *Rt*, [*Rn*, *Rm*]

STR<B|H> *Rt*, [*Rn*, *Rm*]

where:

Rt is the register to load or store.

Rn is the register on which the memory address is based.

Rm is a register containing a value to be used as the offset.

All information provided in this document is subject to legal disclaimers.
© NXP B.V. 2012. All rights reserved.

28.5.4.3.2 Operation

LDR, LDRB, U, LDRSB and LDRSH load the register specified by *Rt* with either a word, zero extended byte, zero extended halfword, sign extended byte or sign extended halfword value from memory.

STR, STRB and STRH store the word, least-significant byte or lower halfword contained in the single register specified by *Rt* into memory.

The memory address to load from or store to is the sum of the values in the registers specified by *Rn* and *Rm*.

28.5.4.3.3 Restrictions

In these instructions:

- *Rt*, *Rn*, and *Rm* must only specify R0-R7.
- the computed memory address must be divisible by the number of bytes in the load or store, see Section 28–28.5.3.4.

28.5.4.3.4 Condition flags

These instructions do not change the flags.

28.5.4.3.5 Examples

```
STR    R0, [R5, R1]        ; Store value of R0 into an address equal to
                           ; sum of R5 and R1

LDRSH  R1, [R2, R3]        ; Load a halfword from the memory address
                           ; specified by (R2 + R3), sign extend to 32-bits

                   ; and write to R1.
```

28.5.4.4 LDR, PC-relative

Load register (literal) from memory.

28.5.4.4.1 Syntax

LDR *Rt*, *label*

where:

Rt is the register to load.

label is a PC-relative expression. See Section 28–28.5.3.5.

28.5.4.4.2 Operation

Loads the register specified by *Rt* from the word in memory specified by *label*.

28.5.4.4.3 Restrictions

In these instructions, *label* must be within 1020 bytes of the current PC and word aligned.

28.5.4.4.4 Condition flags

These instructions do not change the flags.

All information provided in this document is subject to legal disclaimers.
© NXP B.V. 2012. All rights reserved.

28.5.4.4.5 Examples

```
LDR   R0, LookUpTable   ; Load R0 with a word of data from an address
                        ; labelled as LookUpTable.

LDR   R3, [PC, #100]    ; Load R3 with memory word at (PC + 100).
```

28.5.4.5 LDM and STM

Load and Store Multiple registers.

28.5.4.5.1 Syntax

LDM *Rn*{!}, reglist

STM *Rn*!, reglist

where:

Rn is the register on which the memory addresses are based.

! writeback suffix.

reglist is a list of one or more registers to be loaded or stored, enclosed in braces. It can contain register ranges. It must be comma separated if it contains more than one register or register range, see Section 28–28.5.4.5.5.

LDMIA and LDMFD are synonyms for LDM. LDMIA refers to the base register being Incremented After each access. LDMFD refers to its use for popping data from Full Descending stacks.

STMIA and STMEA are synonyms for STM. STMIA refers to the base register being Incremented After each access. STMEA refers to its use for pushing data onto Empty Ascending stacks.

28.5.4.5.2 Operation

LDM instructions load the registers in *reglist* with word values from memory addresses based on *Rn*.

STM instructions store the word values in the registers in *reglist* to memory addresses based on *Rn*.

The memory addresses used for the accesses are at 4-byte intervals ranging from the value in the register specified by *Rn* to the value in the register specified by *Rn* + 4 * (*n*-1), where *n* is the number of registers in *reglist*. The accesses happens in order of increasing register numbers, with the lowest numbered register using the lowest memory address and the highest number register using the highest memory address. If the writeback suffix is specified, the value in the register specified by *Rn* + 4 **n* is written back to the register specified by *Rn*.

28.5.4.5.3 Restrictions

In these instructions:

- *reglist* and *Rn* are limited to R0-R7.
- the writeback suffix must always be used unless the instruction is an LDM where reglist also contains *Rn*, in which case the writeback suffix must not be used.

All information provided in this document is subject to legal disclaimers. © NXP B.V. 2012. All rights reserved.

- the value in the register specified by *Rn* must be word aligned. See Section 28–28.5.3.4 for more information.
- for STM, if *Rn* appears in *reglist*, then it must be the first register in the list.

28.5.4.5.4 Condition flags

These instructions do not change the flags.

28.5.4.5.5 Examples

```
LDM     R0,{R0,R3,R4}      ; LDMIA is a synonym for LDM
        STMIA   R1!,{R2-R4,R6}
```

28.5.4.5.6 Incorrect examples

```
STM     R5!,{R4,R5,R6} ; Value stored for R5 is unpredictable
        LDM     R2,{}          ; There must be at least one register in the list
```

28.5.4.6 PUSH and POP

Push registers onto, and pop registers off a full-descending stack.

28.5.4.6.1 Syntax

PUSH *reglist*

POP *reglist*

where:

reglist is a non-empty list of registers, enclosed in braces. It can contain register ranges. It must be comma separated if it contains more than one register or register range.

28.5.4.6.2 Operation

PUSH stores registers on the stack, with the lowest numbered register using the lowest memory address and the highest numbered register using the highest memory address.

POP loads registers from the stack, with the lowest numbered register using the lowest memory address and the highest numbered register using the highest memory address.

PUSH uses the value in the SP register minus four as the highest memory address,

POP uses the value in the SP register as the lowest memory address, implementing a full-descending stack. On completion,

PUSH updates the SP register to point to the location of the lowest store value,

POP updates the SP register to point to the location above the highest location loaded.

If a POP instruction includes PC in its *reglist*, a branch to this location is performed when the POP instruction has completed. Bit[0] of the value read for the PC is used to update the APSR T-bit. This bit must be 1 to ensure correct operation.

28.5.4.6.3 Restrictions

In these instructions:

- *reglist* must use only R0-R7.

All information provided in this document is subject to legal disclaimers.
© NXP B.V. 2012. All rights reserved.

- The exception is LR for a PUSH and PC for a POP.

28.5.4.6.4 Condition flags

These instructions do not change the flags.

28.5.4.6.5 Examples

```
PUSH    {R0,R4-R7}      ; Push R0,R4,R5,R6,R7 onto the stack
        PUSH    {R2,LR}         ; Push R2 and the link-register onto the stack
        POP     {R0,R6,PC}      ; Pop r0,r6 and PC from the stack, then branch to
                                ; the new PC.
```

28.5.5 General data processing instructions

Table 434 shows the data processing instructions:

Table 434. Data processing instructions

Mnemonic	Brief description	See
ADCS	Add with Carry	Section 28–28.5.5.1
ADD{S}	Add	Section 28–28.5.5.1
ANDS	Logical AND	Section 28–28.5.5.2
ASRS	Arithmetic Shift Right	Section 28–28.5.5.3
BICS	Bit Clear	Section 28–28.5.5.2
CMN	Compare Negative	Section 28–28.5.5.4
CMP	Compare	Section 28–28.5.5.4
EORS	Exclusive OR	Section 28–28.5.5.2
LSLS	Logical Shift Left	Section 28–28.5.5.3
LSRS	Logical Shift Right	Section 28–28.5.5.3
MOV{S}	Move	Section 28–28.5.5.5
MULS	Multiply	Section 28–28.5.5.6
MVNS	Move NOT	Section 28–28.5.5.5
ORRS	Logical OR	Section 28–28.5.5.2
REV	Reverse byte order in a word	Section 28–28.5.5.7
REV16	Reverse byte order in each halfword	Section 28–28.5.5.7
REVSH	Reverse byte order in bottom halfword and sign extend	Section 28–28.5.5.7
RORS	Rotate Right	Section 28–28.5.5.3
RSBS	Reverse Subtract	Section 28–28.5.5.1
SBCS	Subtract with Carry	Section 28–28.5.5.1
SUBS	Subtract	Section 28–28.5.5.1
SXTB	Sign extend a byte	Section 28–28.5.5.8
SXTH	Sign extend a halfword	Section 28–28.5.5.8
UXTB	Zero extend a byte	Section 28–28.5.5.8
UXTH	Zero extend a halfword	Section 28–28.5.5.8
TST	Test	Section 28–28.5.5.9

All information provided in this document is subject to legal disclaimers.
© NXP B.V. 2012. All rights reserved.

28.5.5.1 ADC, ADD, RSB, SBC, and SUB

Add with carry, Add, Reverse Subtract, Subtract with carry, and Subtract.

28.5.5.1.1 Syntax

ADCS {*Rd*,} *Rn*, *Rm*

ADD{S} {*Rd*,} *Rn*, *<Rm|#imm>*

RSBS {*Rd*,} *Rn*, *Rm*, *#0*

SBCS {*Rd*,} *Rn*, *Rm*

SUB{S} {*Rd*,} *Rn*,

<Rm|#imm>

Where:

S causes an ADD or SUB instruction to update flags

Rd specifies the result register

Rn specifies the first source register

Rm specifies the second source register

imm specifies a constant immediate value.

When the optional *Rd* register specifier is omitted, it is assumed to take the same value as *Rn*, for example ADDS R1,R2 is identical to ADDS R1,R1,R2.

28.5.5.1.2 Operation

The ADCS instruction adds the value in *Rn* to the value in *Rm*, adding a further one if the carry flag is set, places the result in the register specified by *Rd* and updates the N, Z, C, and V flags.

The ADD instruction adds the value in *Rn* to the value in *Rm* or an immediate value specified by *imm* and places the result in the register specified by *Rd*.

The ADDS instruction performs the same operation as ADD and also updates the N, Z, C and V flags.

The RSBS instruction subtracts the value in *Rn* from zero, producing the arithmetic negative of the value, and places the result in the register specified by Rd and updates the N, Z, C and V flags.

The SBCS instruction subtracts the value of *Rm* from the value in *Rn*, deducts a further one if the carry flag is set. It places the result in the register specified by Rd and updates the N, Z, C and V flags.

The SUB instruction subtracts the value in *Rm* or the immediate specified by *imm*. It places the result in the register specified by *Rd*.

The SUBS instruction performs the same operation as SUB and also updates the N, Z, C and V flags.

Use ADC and SBC to synthesize multiword arithmetic, see Section 28.5.5.1.4.

All information provided in this document is subject to legal disclaimers.
© NXP B.V. 2012. All rights reserved.

See also Section 28–28.5.4.1.

28.5.5.1.3 Restrictions

Table 435 lists the legal combinations of register specifiers and immediate values that can be used with each instruction.

Table 435. ADC, ADD, RSB, SBC and SUB operand restrictions

Instruction	Rd	Rn	Rm	imm	Restrictions
ADCS	R0-R7	R0-R7	R0-R7	-	*Rd* and *Rn* must specify the same register.
ADD	R0-R15	R0-R15	R0-PC	-	*Rd* and *Rn* must specify the same register. *Rn* and *Rm* must not both specify PC.
	R0-R7	SP or PC	-	0-1020	Immediate value must be an integer multiple of four.
	SP	SP	-	0-508	Immediate value must be an integer multiple of four.
ADDS	R0-R7	R0-R7	-	0-7	-
	R0-R7	R0-R7	-	0-255	*Rd* and *Rn* must specify the same register.
	R0-R7	R0-R7	R0-R7	-	-
RSBS	R0-R7	R0-R7	-	-	-
SBCS	R0-R7	R0-R7	R0-R7	-	*Rd* and *Rn* must specify the same register.
SUB	SP	SP	-	0-508	Immediate value must be an integer multiple of four.
SUBS	R0-R7	R0-R7	-	0-7	-
	R0-R7	R0-R7	-	0-255	Rd and *Rn* must specify the same register.
	R0-R7	R0-R7	R0-R7	-	-

28.5.5.1.4 Examples

The following shows two instructions that add a 64-bit integer contained in R0 and R1 to another 64-bit integer contained in R2 and R3, and place the result in R0 and R1.

64-bit addition:

```
ADDS    R0, R0, R2    ; add the least significant words
        ADCS    R1, R1, R3    ; add the most significant words with carry
```

Multiword values do not have to use consecutive registers. The following shows instructions that subtract a 96-bit integer contained in R1, R2, and R3 from another contained in R4, R5, and R6. The example stores the result in R4, R5, and R6.

96-bit subtraction:

```
SUBS    R4, R4, R1    ; subtract the least significant words
        SBCS    R5, R5, R2    ; subtract the middle words with carry
        SBCS    R6, R6, R3    ; subtract the most significant words with carry
```

The following shows the RSBS instruction used to perform a 1's complement of a single register.

Arithmetic negation: `RSBS  R7, R7, #0  ; subtract R7 from zero`

28.5.5.2 AND, ORR, EOR, and BIC

Logical AND, OR, Exclusive OR, and Bit Clear.

All information provided in this document is subject to legal disclaimers.
© NXP B.V. 2012. All rights reserved.

28.5.5.2.1 Syntax

ANDS {*Rd,*} *Rn*, *Rm*

ORRS {*Rd,*} *Rn*, *Rm*

EORS {*Rd,*} *Rn*, *Rm*

BICS {*Rd,*} *Rn*, *Rm*

where:

Rd is the destination register.

Rn is the register holding the first operand and is the same as the destination register.

Rm second register.

28.5.5.2.2 Operation

The AND, EOR, and ORR instructions perform bitwise AND, exclusive OR, and inclusive OR operations on the values in *Rn* and *Rm*.

The BIC instruction performs an AND operation on the bits in *Rn* with the logical negation of the corresponding bits in the value of *Rm*.

The condition code flags are updated on the result of the operation, see Section 28.5.3.6.1.

28.5.5.2.3 Restrictions

In these instructions, *Rd*, *Rn*, and *Rm* must only specify R0-R7.

28.5.5.2.4 Condition flags

These instructions:

- update the N and Z flags according to the result
- do not affect the C or V flag.

28.5.5.2.5 Examples

```
ANDS    R2, R2, R1
        ORRS    R2, R2, R5
        ANDS    R5, R5, R8
        EORS    R7, R7, R6
        BICS    R0, R0, R1
```

28.5.5.3 ASR, LSL, LSR, and ROR

Arithmetic Shift Right, Logical Shift Left, Logical Shift Right, and Rotate Right.

28.5.5.3.1 Syntax

ASRS {Rd,} *Rm*, *Rs*

ASRS {Rd,} *Rm*, *#imm*

LSLS {Rd,} *Rm*, *Rs*

LSLS {Rd,} *Rm*, *#imm*

All information provided in this document is subject to legal disclaimers. © NXP B.V. 2012. All rights reserved.

LSRS {Rd,} *Rm*, *Rs*

LSRS {Rd,} *Rm*, #*imm*

RORS {Rd,} *Rm*, *Rs*

where:

Rd is the destination register. If *Rd* is omitted, it is assumed to take the same value as *Rm*.

Rm is the register holding the value to be shifted.

Rs is the register holding the shift length to apply to the value in *Rm*.

imm is the shift length.

The range of shift length depends on the instruction:

ASR — shift length from 1 to 32

LSL — shift length from 0 to 31

LSR — shift length from 1 to 32.

Remark: MOVS Rd, *Rm* is a pseudonym for LSLS Rd, *Rm*, #0.

28.5.5.3.2 Operation

ASR, LSL, LSR, and ROR perform an arithmetic-shift-left, logical-shift-left, logical-shift-right or a right-rotation of the bits in the register *Rm* by the number of places specified by the immediate *imm* or the value in the least-significant byte of the register specified by *Rs*.

For details on what result is generated by the different instructions, see Section 28–28.5.3.3.

28.5.5.3.3 Restrictions

In these instructions, *Rd*, *Rm*, and *Rs* must only specify R0-R7. For non-immediate instructions, *Rd* and *Rm* must specify the same register.

28.5.5.3.4 Condition flags

These instructions update the N and Z flags according to the result.

The C flag is updated to the last bit shifted out, except when the shift length is 0, see Section 28–28.5.3.3. The V flag is left unmodified.

28.5.5.3.5 Examples

```
ASRS   R7, R5, #9  ; Arithmetic shift right by 9 bits
       LSLS   R1, R2, #3  ; Logical shift left by 3 bits with flag update
       LSRS   R4, R5, #6  ; Logical shift right by 6 bits
       RORS   R4, R4, R6  ; Rotate right by the value in the bottom byte of R6.
```

28.5.5.4 CMP and CMN

Compare and Compare Negative.

All information provided in this document is subject to legal disclaimers.
© NXP B.V. 2012. All rights reserved.

28.5.5.4.1 Syntax

CMN *Rn*, *Rm*

CMP *Rn*, *#imm*

CMP *Rn*, *Rm*

where:

Rn is the register holding the first operand.

Rm is the register to compare with.

imm is the immediate value to compare with.

28.5.5.4.2 Operation

These instructions compare the value in a register with either the value in another register or an immediate value. They update the condition flags on the result, but do not write the result to a register.

The CMP instruction subtracts either the value in the register specified by *Rm*, or the immediate *imm* from the value in *Rn* and updates the flags. This is the same as a SUBS instruction, except that the result is discarded.

The CMN instruction adds the value of *Rm* to the value in *Rn* and updates the flags. This is the same as an ADDS instruction, except that the result is discarded.

28.5.5.4.3 Restrictions

For the:

- CMN

  instruction *Rn*, and *Rm* must only specify R0-R7.
- CMP instruction:
  - *Rn* and *Rm* can specify R0-R14
  - immediate must be in the range 0-255.

28.5.5.4.4 Condition flags

These instructions update the N, Z, C and V flags according to the result.

28.5.5.4.5 Examples

```
CMP    R2, R9
       CMN    R0, R2
```

28.5.5.5 MOV and MVN

Move and Move NOT.

28.5.5.5.1 Syntax

MOV{S} *Rd*, *Rm*

MOVS *Rd*, *#imm*

All information provided in this document is subject to legal disclaimers.
© NXP B.V. 2012. All rights reserved.

MVNS *Rd*, *Rm*

where:

S is an optional suffix. If *S* is specified, the condition code flags are updated on the result of the operation, see Section 28–28.5.3.6.

Rd is the destination register.

Rm is a register.

imm is any value in the range 0-255.

28.5.5.5.2 Operation

The MOV instruction copies the value of *Rm* into *Rd*.

The MOVS instruction performs the same operation as the MOV instruction, but also updates the N and Z flags.

The MVNS instruction takes the value of *Rm*, performs a bitwise logical negate operation on the value, and places the result into *Rd*.

28.5.5.5.3 Restrictions

In these instructions, *Rd*, and *Rm* must only specify R0-R7.

When *Rd* is the PC in a MOV instruction:

- Bit[0] of the result is discarded.
- A branch occurs to the address created by forcing bit[0] of the result to 0. The T-bit remains unmodified.

Remark: Though it is possible to use MOV as a branch instruction, ARM strongly recommends the use of a BX or BLX instruction to branch for software portability.

28.5.5.5.4 Condition flags

If *S* is specified, these instructions:

- update the N and Z flags according to the result
- do not affect the C or V flags.

28.5.5.5.5 Example

```
MOVS  R0, #0x000B    ; Write value of 0x000B to R0, flags get updated
      MOVS  R1, #0x0      ; Write value of zero to R1, flags are updated
      MOV   R10, R12      ; Write value in R12 to R10, flags are not updated
      MOVS  R3, #23       ; Write value of 23 to R3
      MOV   R8, SP        ; Write value of stack pointer to R8
      MVNS  R2, R0        ; Write inverse of R0 to the R2 and update flags
```

28.5.5.6 MULS

Multiply using 32-bit operands, and producing a 32-bit result.

28.5.5.6.1 Syntax

MULS Rd, *Rn*, *Rm*

All information provided in this document is subject to legal disclaimers.
© NXP B.V. 2012. All rights reserved.

where:

Rd is the destination register.

Rn, Rm are registers holding the values to be multiplied.

28.5.5.6.2 Operation

The MUL instruction multiplies the values in the registers specified by *Rn* and *Rm*, and places the least significant 32 bits of the result in *Rd*. The condition code flags are updated on the result of the operation, see Section 28–28.5.3.6.

The results of this instruction does not depend on whether the operands are signed or unsigned.

28.5.5.6.3 Restrictions

In this instruction:

- *Rd*, *Rn*, and *Rm* must only specify R0-R7
- *Rd* must be the same as *Rm*.

28.5.5.6.4 Condition flags

This instruction:

- updates the N and Z flags according to the result
- does not affect the C or V flags.

28.5.5.6.5 Examples

```
MULS    R0, R2, R0      ; Multiply with flag update, R0 = R0 x R2
```

28.5.5.7 REV, REV16, and REVSH

Reverse bytes.

28.5.5.7.1 Syntax

REV Rd, *Rn*

REV16 Rd, *Rn*

REVSH Rd, *Rn*

where:

Rd is the destination register.

Rn is the source register.

28.5.5.7.2 Operation

Use these instructions to change endianness of data:

REV — converts 32-bit big-endian data into little-endian data or 32-bit little-endian data into big-endian data.

REV16 — converts two packed 16-bit big-endian data into little-endian data or two packed 16-bit little-endian data into big-endian data.

All information provided in this document is subject to legal disclaimers. © NXP B.V. 2012. All rights reserved.

REVSH — converts 16-bit signed big-endian data into 32-bit signed little-endian data or 16-bit signed little-endian data into 32-bit signed big-endian data.

28.5.5.7.3 Restrictions

In these instructions, *Rd*, and *Rn* must only specify R0-R7.

28.5.5.7.4 Condition flags

These instructions do not change the flags.

28.5.5.7.5 Examples

```
REV    R3, R7  ; Reverse byte order of value in R7 and write it to R3
       REV16  R0, R0  ; Reverse byte order of each 16-bit halfword in R0
       REVSH  R0, R5  ; Reverse signed halfword
```

28.5.5.8 SXT and UXT

Sign extend and Zero extend.

28.5.5.8.1 Syntax

SXTB Rd, *Rm*

SXTH Rd, *Rm*

UXTB Rd, *Rm*

UXTH Rd, *Rm*

where:

Rd is the destination register.

Rm is the register holding the value to be extended.

28.5.5.8.2 Operation

These instructions extract bits from the resulting value:

- SXTB extracts bits[7:0] and sign extends to 32 bits
- UXTB extracts bits[7:0] and zero extends to 32 bits
- SXTH extracts bits[15:0] and sign extends to 32 bits
- UXTH extracts bits[15:0] and zero extends to 32 bits.

28.5.5.8.3 Restrictions

In these instructions, *Rd* and *Rm* must only specify R0-R7.

28.5.5.8.4 Condition flags

These instructions do not affect the flags.

All information provided in this document is subject to legal disclaimers.
© NXP B.V. 2012. All rights reserved.

28.5.5.8.5 Examples

```
SXTH  R4, R6        ; Obtain the lower halfword of the
                    ; value in R6 and then sign extend to
                    ; 32 bits and write the result to R4.
      UXTB  R3, R1        ; Extract lowest byte of the value in R10 and zero
                    ; extend it, and write the result to R3
```

28.5.5.9 TST

Test bits.

28.5.5.9.1 Syntax

TST *Rn*, *Rm*

where:

Rn is the register holding the first operand.

Rm the register to test against.

28.5.5.9.2 Operation

This instruction tests the value in a register against another register. It updates the condition flags based on the result, but does not write the result to a register.

The TST instruction performs a bitwise AND operation on the value in *Rn* and the value in *Rm*. This is the same as the ANDS instruction, except that it discards the result.

To test whether a bit of *Rn* is 0 or 1, use the TST instruction with a register that has that bit set to 1 and all other bits cleared to 0.

28.5.5.9.3 Restrictions

In these instructions, *Rn* and *Rm* must only specify R0-R7.

28.5.5.9.4 Condition flags

This instruction:

- updates the N and Z flags according to the result
- does not affect the C or V flags.

28.5.5.9.5 Examples

```
TST    R0, R1  ; Perform bitwise AND of R0 value and R1 value,
                ; condition code flags are updated but result is discarded
```

28.5.6 Branch and control instructions

Table 436 shows the branch and control instructions:

Table 436. Branch and control instructions

Mnemonic	Brief description	See
B{cc}	Branch {conditionally}	Section 28–28.5.6.1

All information provided in this document is subject to legal disclaimers.
© NXP B.V. 2012. All rights reserved.

Table 436. Branch and control instructions

Mnemonic	Brief description	See
BL	Branch with Link	Section 28–28.5.6.1
BLX	Branch indirect with Link	Section 28–28.5.6.1
BX	Branch indirect	Section 28–28.5.6.1

28.5.6.1 B, BL, BX, and BLX

Branch instructions.

28.5.6.1.1 Syntax

B{*cond*} *label*

BL *label*

BX *Rm*

BLX *Rm*

where:

cond is an optional condition code, see Section 28–28.5.3.6.

label is a PC-relative expression. See Section 28–28.5.3.5.

Rm is a register providing the address to branch to.

28.5.6.1.2 Operation

All these instructions cause a branch to the address indicated by *label* or contained in the register specified by *Rm*. In addition:

- The BL and BLX instructions write the address of the next instruction to LR, the link register R14.
- The BX and BLX instructions result in a HardFault exception if bit[0] of *Rm* is 0.

BL and BLX instructions also set bit[0] of the LR to 1. This ensures that the value is suitable for use by a subsequent POP {PC} or BX instruction to perform a successful return branch.

Table 437 shows the ranges for the various branch instructions.

Table 437. Branch ranges

Instruction	Branch range
B *label*	–2 KB to +2 KB
B*cond label*	–256 bytes to +254 bytes
BL *label*	–16 MB to +16 MB
BX *Rm*	Any value in register
BLX *Rm*	Any value in register

28.5.6.1.3 Restrictions

In these instructions:

- Do not use SP or PC in the BX or BLX instruction.

All information provided in this document is subject to legal disclaimers.
© NXP B.V. 2012. All rights reserved.

- For BX and BLX, bit[0] of *Rm* must be 1 for correct execution. Bit[0] is used to update the EPSR T-bit and is discarded from the target address.

Remark: B*cond* is the only conditional instruction on the Cortex-M0 processor.

28.5.6.1.4 Condition flags

These instructions do not change the flags.

28.5.6.1.5 Examples

```
B     loopA  ; Branch to loopA
      BL     funC   ; Branch with link (Call) to function funC, return address
                ; stored in LR
      BX     LR     ; Return from function call
      BLX    R0     ; Branch with link and exchange (Call) to a address stored
                ; in R0

BEQ   labelD ; Conditionally branch to labelD if last flag setting

          ; instruction set the Z flag, else do not branch.
```

28.5.7 Miscellaneous instructions

Table 438 shows the remaining Cortex-M0 instructions:

Table 438. Miscellaneous instructions

Mnemonic	Brief description	See
BKPT	Breakpoint	Section 28–28.5.7.1
CPSID	Change Processor State, Disable Interrupts	Section 28–28.5.7.2
CPSIE	Change Processor State, Enable Interrupts	Section 28–28.5.7.2
DMB	Data Memory Barrier	Section 28–28.5.7.3
DSB	Data Synchronization Barrier	Section 28–28.5.7.4
ISB	Instruction Synchronization Barrier	Section 28–28.5.7.5
MRS	Move from special register to register	Section 28–28.5.7.6
MSR	Move from register to special register	Section 28–28.5.7.7
NOP	No Operation	Section 28–28.5.7.8
SEV	Send Event	Section 28–28.5.7.9

All information provided in this document is subject to legal disclaimers.
© NXP B.V. 2012. All rights reserved.

Table 438. Miscellaneous instructions

Mnemonic	Brief description	See
SVC	Supervisor Call	Section 28–28.5.7.10
WFE	Wait For Event	Section 28–28.5.7.11
WFI	Wait For Interrupt	Section 28–28.5.7.12

28.5.7.1 BKPT

Breakpoint.

28.5.7.1.1 Syntax

BKPT #*imm*

where:

imm is an integer in the range 0-255.

28.5.7.1.2 Operation

The BKPT instruction causes the processor to enter Debug state. Debug tools can use this to investigate system state when the instruction at a particular address is reached. *imm* is ignored by the processor. If required, a debugger can use it to store additional information about the breakpoint.

The processor might also produce a HardFault or go in to lockup if a debugger is not attached when a BKPT instruction is executed. See Section 28–28.4.4.1 for more information.

28.5.7.1.3 Restrictions

There are no restrictions.

28.5.7.1.4 Condition flags

This instruction does not change the flags.

28.5.7.1.5 Examples

```
BKPT #0    ; Breakpoint with immediate value set to 0x0.
```

28.5.7.2 CPS

Change Processor State.

28.5.7.2.1 Syntax

CPSID i

CPSIE i

28.5.7.2.2 Operation

CPS changes the PRIMASK special register values. CPSID causes interrupts to be disabled by setting PRIMASK. CPSIE cause interrupts to be enabled by clearing PRIMASK.See Section 28–28.4.1.3.6 for more information about these registers.

All information provided in this document is subject to legal disclaimers. © NXP B.V. 2012. All rights reserved.

28.5.7.2.3 Restrictions

There are no restrictions.

28.5.7.2.4 Condition flags

This instruction does not change the condition flags.

28.5.7.2.5 Examples

```
CPSID i ; Disable all interrupts except NMI (set PRIMASK)

CPSIE i ; Enable interrupts (clear PRIMASK)
```

28.5.7.3 DMB

Data Memory Barrier.

28.5.7.3.1 Syntax

DMB

28.5.7.3.2 Operation

DMB acts as a data memory barrier. It ensures that all explicit memory accesses that appear in program order before the DMB instruction are observed before any explicit memory accesses that appear in program order after the DMB instruction. DMB does not affect the ordering of instructions that do not access memory.

28.5.7.3.3 Restrictions

There are no restrictions.

28.5.7.3.4 Condition flags

This instruction does not change the flags.

28.5.7.3.5 Examples

```
DMB  ; Data Memory Barrier
```

28.5.7.4 DSB

Data Synchronization Barrier.

28.5.7.4.1 Syntax

DSB

28.5.7.4.2 Operation

DSB acts as a special data synchronization memory barrier. Instructions that come after the DSB, in program order, do not execute until the DSB instruction completes. The DSB instruction completes when all explicit memory accesses before it complete.

28.5.7.4.3 Restrictions

There are no restrictions.

All information provided in this document is subject to legal disclaimers.
© NXP B.V. 2012. All rights reserved.

28.5.7.4.4 Condition flags

This instruction does not change the flags.

28.5.7.4.5 Examples

```
DSB ; Data Synchronisation Barrier
```

28.5.7.5 ISB

Instruction Synchronization Barrier.

28.5.7.5.1 Syntax

ISB

28.5.7.5.2 Operation

ISB acts as an instruction synchronization barrier. It flushes the pipeline of the processor, so that all instructions following the ISB are fetched from cache or memory again, after the ISB instruction has been completed.

28.5.7.5.3 Restrictions

There are no restrictions.

28.5.7.5.4 Condition flags

This instruction does not change the flags.

28.5.7.5.5 Examples

```
ISB  ; Instruction Synchronisation Barrier
```

28.5.7.6 MRS

Move the contents of a special register to a general-purpose register.

28.5.7.6.1 Syntax

MRS *Rd*, *spec_reg*

where:

Rd is the general-purpose destination register.

spec_reg is one of the special-purpose registers: APSR, IPSR, EPSR, IEPSR, IAPSR, EAPSR, PSR, MSP, PSP, PRIMASK, or CONTROL.

28.5.7.6.2 Operation

MRS stores the contents of a special-purpose register to a general-purpose register. The MRS instruction can be combined with the MR instruction to produce read-modify-write sequences, which are suitable for modifying a specific flag in the PSR.

See Section 28–28.5.7.7.

28.5.7.6.3 Restrictions

In this instruction, *Rd* must not be SP or PC.

All information provided in this document is subject to legal disclaimers.
© NXP B.V. 2012. All rights reserved.

28.5.7.6.4 Condition flags

This instruction does not change the flags.

28.5.7.6.5 Examples

```
MRS  R0, PRIMASK ; Read PRIMASK value and write it to R0
```

28.5.7.7 MSR

Move the contents of a general-purpose register into the specified special register.

28.5.7.7.1 Syntax

MSR *spec_reg*, *Rn*

where:

Rn is the general-purpose source register.

spec_reg is the special-purpose destination register: APSR, IPSR, EPSR, IEPSR, IAPSR, EAPSR, PSR, MSP, PSP, PRIMASK, or CONTROL.

28.5.7.7.2 Operation

MSR updates one of the special registers with the value from the register specified by *Rn*.

See Section 28–28.5.7.6.

28.5.7.7.3 Restrictions

In this instruction, *Rn* must not be SP and must not be PC.

28.5.7.7.4 Condition flags

This instruction updates the flags explicitly based on the value in *Rn*.

28.5.7.7.5 Examples

```
MSR  CONTROL, R1 ; Read R1 value and write it to the CONTROL register
```

28.5.7.8 NOP

No Operation.

28.5.7.8.1 Syntax

NOP

28.5.7.8.2 Operation

NOP performs no operation and is not guaranteed to be time consuming. The processor might remove it from the pipeline before it reaches the execution stage.

Use NOP for padding, for example to place the subsequent instructions on a 64-bit boundary.

28.5.7.8.3 Restrictions

There are no restrictions.

All information provided in this document is subject to legal disclaimers.
© NXP B.V. 2012. All rights reserved.

28.5.7.8.4 Condition flags

This instruction does not change the flags.

28.5.7.8.5 Examples

```
NOP ; No operation
```

28.5.7.9 SEV

Send Event.

28.5.7.9.1 Syntax

SEV

28.5.7.9.2 Operation

SEV causes an event to be signaled to all processors within a multiprocessor system. It also sets the local event register, see Section 28–28.4.5.

See also Section 28–28.5.7.11.

28.5.7.9.3 Restrictions

There are no restrictions.

28.5.7.9.4 Condition flags

This instruction does not change the flags.

28.5.7.9.5 Examples

```
SEV ; Send Event
```

28.5.7.10 SVC

Supervisor Call.

28.5.7.10.1 Syntax

SVC #*imm*

where:

imm is an integer in the range 0-255.

28.5.7.10.2 Operation

The SVC instruction causes the SVC exception.

imm is ignored by the processor. If required, it can be retrieved by the exception handler to determine what service is being requested.

28.5.7.10.3 Restrictions

There are no restrictions.

28.5.7.10.4 Condition flags

This instruction does not change the flags.

All information provided in this document is subject to legal disclaimers.
© NXP B.V. 2012. All rights reserved.

28.5.7.10.5 Examples

```
SVC  #0x32 ; Supervisor Call (SVC handler can extract the immediate value
           ; by locating it via the stacked PC)
```

28.5.7.11 WFE

Wait For Event.

Remark: The WFE instruction is not implemented on the LPC111x/LPC11Cxx

28.5.7.11.1 Syntax

WFE

28.5.7.11.2 Operation

If the event register is 0, WFE suspends execution until one of the following events occurs:

- an exception, unless masked by the exception mask registers or the current priority level
- an exception enters the Pending state, if SEVONPEND in the System Control Register is set
- a Debug Entry request, if debug is enabled
- an event signaled by a peripheral or another processor in a multiprocessor system using the SEV instruction.

If the event register is 1, WFE clears it to 0 and completes immediately.

For more information see Section 28–28.4.5.

Remark: WFE is intended for power saving only. When writing software assume that WFE might behave as NOP.

28.5.7.11.3 Restrictions

There are no restrictions.

28.5.7.11.4 Condition flags

This instruction does not change the flags.

28.5.7.11.5 Examples

```
WFE  ; Wait for event
```

28.5.7.12 WFI

Wait for Interrupt.

28.5.7.12.1 Syntax

WFI

All information provided in this document is subject to legal disclaimers.
© NXP B.V. 2012. All rights reserved.

28.5.7.12.2 Operation

WFI

suspends execution until one of the following events occurs:

- an exception
- an interrupt becomes pending which would preempt if PRIMASK was clear
- a Debug Entry request, regardless of whether debug is enabled.

Remark: WFI is intended for power saving only. When writing software assume that WFI might behave as a NOP operation.

28.5.7.12.3 Restrictions

There are no restrictions.

28.5.7.12.4 Condition flags

This instruction does not change the flags.

28.5.7.12.5 Examples

```
WFI ; Wait for interrupt
```

28.6 Peripherals

28.6.1 About the ARM Cortex-M0

The address map of the **Private peripheral bus** (PPB) is:

Table 439. Core peripheral register regions

Address	Core peripheral	Description
0xE000E008-0xE000E00F	System Control Block	Table 28–448
0xE000E010-0xE000E01F	System timer	Table 28–457
0xE000E100-0xE000E4EF	Nested Vectored Interrupt Controller	Table 28–440
0xE000ED00-0xE000ED3F	System Control Block	Table 28–448
0xE000EF00-0xE000EF03	Nested Vectored Interrupt Controller	Table 28–440

In register descriptions, the register **type** is described as follows:

RW — Read and write.

RO — Read-only.

WO — Write-only.

28.6.2 Nested Vectored Interrupt Controller

This section describes the **Nested Vectored Interrupt Controller** (NVIC) and the registers it uses. The NVIC supports:

- 32 interrupts.

All information provided in this document is subject to legal disclaimers.
© NXP B.V. 2012. All rights reserved.

- A programmable priority level of 0-3 for each interrupt. A higher level corresponds to a lower priority, so level 0 is the highest interrupt priority.
- Level and pulse detection of interrupt signals.
- Interrupt tail-chaining.
- An external **Non-Maskable Interrupt** (NMI). See Section 28.1 for implementation of the NMI for specific parts.

The processor automatically stacks its state on exception entry and unstacks this state on exception exit, with no instruction overhead. This provides low latency exception handling. The hardware implementation of the NVIC registers is:

Table 440. NVIC register summary

Address	Name	Type	Reset value	Description
0xE000E100	ISER	RW	0x00000000	Section 28–28.6.2.2
0xE000E180	ICER	RW	0x00000000	Section 28–28.6.2.3
0xE000E200	ISPR	RW	0x00000000	Section 28–28.6.2.4
0xE000E280	ICPR	RW	0x00000000	Section 28–28.6.2.5
0xE000E400-0xE000E41C	IPR0-7	RW	0x00000000	Section 28–28.6.2.6

28.6.2.1 Accessing the Cortex-M0 NVIC registers using CMSIS

CMSIS functions enable software portability between different Cortex-M profile processors.

To access the NVIC registers when using CMSIS, use the following functions:

Table 441. CMISIS access NVIC functions

CMSIS function	Description
void NVIC_EnableIRQ(IRQn_Type IRQn)[1]	Enables an interrupt or exception.
void NVIC_DisableIRQ(IRQn_Type IRQn)[1]	Disables an interrupt or exception.
void NVIC_SetPendingIRQ(IRQn_Type IRQn)[1]	Sets the pending status of interrupt or exception to 1.
void NVIC_ClearPendingIRQ(IRQn_Type IRQn)[1]	Clears the pending status of interrupt or exception to 0.
uint32_t NVIC_GetPendingIRQ(IRQn_Type IRQn)[1]	Reads the pending status of interrupt or exception. This function returns non-zero value if the pending status is set to 1.
void NVIC_SetPriority(IRQn_Type IRQn, uint32_t priority)[1]	Sets the priority of an interrupt or exception with configurable priority level to 1.
uint32_t NVIC_GetPriority(IRQn_Type IRQn)[1]	Reads the priority of an interrupt or exception with configurable priority level. This function returns the current priority level.

[1] The input parameter IRQn is the IRQ number, see Table 427 for more information.

28.6.2.2 Interrupt Set-enable Register

The ISER enables interrupts, and shows which interrupts are enabled. See the register summary in Table 440 for the register attributes.

The bit assignments are:

All information provided in this document is subject to legal disclaimers. © NXP B.V. 2012. All rights reserved.

Table 442. ISER bit assignments

Bits	Name	Function
[31:0]	SETENA	Interrupt set-enable bits. Write: 0 = no effect 1 = enable interrupt. Read: 0 = interrupt disabled 1 = interrupt enabled.

If a pending interrupt is enabled, the NVIC activates the interrupt based on its priority. If an interrupt is not enabled, asserting its interrupt signal changes the interrupt state to pending, but the NVIC never activates the interrupt, regardless of its priority.

28.6.2.3 Interrupt Clear-enable Register

The ICER disables interrupts, and show which interrupts are enabled. See the register summary in Table 28–440 for the register attributes.

The bit assignments are:

Table 443. ICER bit assignments

Bits	Name	Function
[31:0]	CLRENA	Interrupt clear-enable bits. Write: 0 = no effect 1 = disable interrupt. Read: 0 = interrupt disabled 1 = interrupt enabled.

28.6.2.4 Interrupt Set-pending Register

The ISPR forces interrupts into the pending state, and shows which interrupts are pending. See the register summary in Table 28–440 for the register attributes.

The bit assignments are:

Table 444. ISPR bit assignments

Bits	Name	Function
[31:0]	SETPEND	Interrupt set-pending bits. Write: 0 = no effect 1 = changes interrupt state to pending. Read: 0 = interrupt is not pending 1 = interrupt is pending.

Remark: Writing 1 to the ISPR bit corresponding to:

- an interrupt that is pending has no effect

All information provided in this document is subject to legal disclaimers.
© NXP B.V. 2012. All rights reserved.

- a disabled interrupt sets the state of that interrupt to pending.

28.6.2.5 Interrupt Clear-pending Register

The ICPR removes the pending state from interrupts, and shows which interrupts are pending. See the register summary in Table 28–440 for the register attributes.

The bit assignments are:

Table 445. ICPR bit assignments

Bits	Name	Function
[31:0]	CLRPEND	Interrupt clear-pending bits. Write: 0 = no effect 1 = removes pending state an interrupt. Read: 0 = interrupt is not pending 1 = interrupt is pending.

Remark: Writing 1 to an ICPR bit does not affect the active state of the corresponding interrupt.

28.6.2.6 Interrupt Priority Registers

The IPR0-IPR7 registers provide an 2-bit priority field for each interrupt. These registers are only word-accessible. See the register summary in Table 28–440 for their attributes. Each register holds four priority fields as shown:

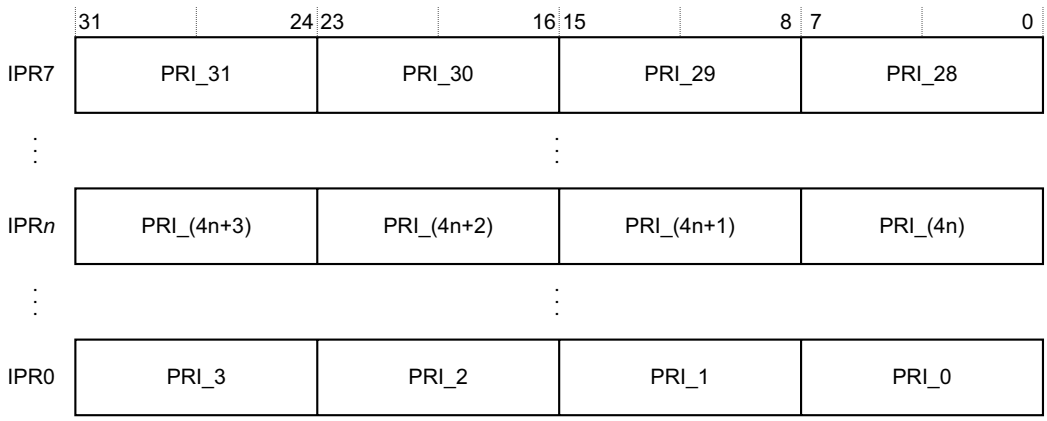

Fig 106. IPR register

Table 446. IPR bit assignments

Bits	Name	Function
[31:24]	Priority, byte offset 3	Each priority field holds a priority value, 0-3. The lower the value, the greater the priority of the corresponding interrupt. The processor implements only bits[7:6] of each field, bits [5:0] read as zero and ignore writes.
[23:16]	Priority, byte offset 2	
[15:8]	Priority, byte offset 1	
[7:0]	Priority, byte offset 0	

All information provided in this document is subject to legal disclaimers.

© NXP B.V. 2012. All rights reserved.

See Section 28–28.6.2.1 for more information about the access to the interrupt priority array, which provides the software view of the interrupt priorities.

Find the IPR number and byte offset for interrupt **M** as follows:

- the corresponding IPR number, **N**, is given by **N** = **N** DIV 4
- the byte offset of the required Priority field in this register is **M** MOD 4, where:
  - byte offset 0 refers to register bits[7:0]
  - byte offset 1 refers to register bits[15:8]
  - byte offset 2 refers to register bits[23:16]
  - byte offset 3 refers to register bits[31:24].

28.6.2.7 Level-sensitive and pulse interrupts

The processor supports both level-sensitive and pulse interrupts. Pulse interrupts are also described as edge-triggered interrupts.

A level-sensitive interrupt is held asserted until the peripheral deasserts the interrupt signal. Typically this happens because the ISR accesses the peripheral, causing it to clear the interrupt request. A pulse interrupt is an interrupt signal sampled synchronously on the rising edge of the processor clock. To ensure the NVIC detects the interrupt, the peripheral must assert the interrupt signal for at least one clock cycle, during which the NVIC detects the pulse and latches the interrupt.

When the processor enters the ISR, it automatically removes the pending state from the interrupt, see Section 28.6.2.7.1. For a level-sensitive interrupt, if the signal is not deasserted before the processor returns from the ISR, the interrupt becomes pending again, and the processor must execute its ISR again. This means that the peripheral can hold the interrupt signal asserted until it no longer needs servicing.

28.6.2.7.1 Hardware and software control of interrupts

The Cortex-M0 latches all interrupts. A peripheral interrupt becomes pending for one of the following reasons:

- the NVIC detects that the interrupt signal is active and the corresponding interrupt is not active
- the NVIC detects a rising edge on the interrupt signal
- software writes to the corresponding interrupt set-pending register bit, see Section 28–28.6.2.4.

A pending interrupt remains pending until one of the following:

- The processor enters the ISR for the interrupt. This changes the state of the interrupt from pending to active. Then:
  - For a level-sensitive interrupt, when the processor returns from the ISR, the NVIC samples the interrupt signal. If the signal is asserted, the state of the interrupt changes to pending, which might cause the processor to immediately re-enter the ISR. Otherwise, the state of the interrupt changes to inactive.

All information provided in this document is subject to legal disclaimers.
© NXP B.V. 2012. All rights reserved.

- For a pulse interrupt, the NVIC continues to monitor the interrupt signal, and if this is pulsed the state of the interrupt changes to pending and active. In this case, when the processor returns from the ISR the state of the interrupt changes to pending, which might cause the processor to immediately re-enter the ISR.

  If the interrupt signal is not pulsed while the processor is in the ISR, when the processor returns from the ISR the state of the interrupt changes to inactive.

- Software writes to the corresponding interrupt clear-pending register bit.

  For a level-sensitive interrupt, if the interrupt signal is still asserted, the state of the interrupt does not change. Otherwise, the state of the interrupt changes to inactive.

  For a pulse interrupt, state of the interrupt changes to:

  - inactive, if the state was pending
  - active, if the state was active and pending.

28.6.2.8 NVIC usage hints and tips

Ensure software uses correctly aligned register accesses. The processor does not support unaligned accesses to NVIC registers.

An interrupt can enter pending state even if it is disabled. Disabling an interrupt only prevents the processor from taking that interrupt.

28.6.2.8.1 NVIC programming hints

Software uses the CPSIE i and CPSID i instructions to enable and disable interrupts. The CMSIS provides the following intrinsic functions for these instructions:

```
void __disable_irq(void) // Disable Interrupts

void __enable_irq(void) // Enable Interrupts
```

In addition, the CMSIS provides a number of functions for NVIC control, including:

Table 447. CMSIS functions for NVIC control

CMSIS interrupt control function	Description
void NVIC_EnableIRQ(IRQn_t IRQn)	Enable IRQn
void NVIC_DisableIRQ(IRQn_t IRQn)	Disable IRQn
uint32_t NVIC_GetPendingIRQ (IRQn_t IRQn)	Return true (1) if IRQn is pending
void NVIC_SetPendingIRQ (IRQn_t IRQn)	Set IRQn pending
void NVIC_ClearPendingIRQ (IRQn_t IRQn)	Clear IRQn pending status
void NVIC_SetPriority (IRQn_t IRQn, uint32_t priority)	Set priority for IRQn
uint32_t NVIC_GetPriority (IRQn_t IRQn)	Read priority of IRQn
void NVIC_SystemReset (void)	Reset the system

The input parameter IRQn is the IRQ number, see Table 28–427 for more information. For more information about these functions, see the CMSIS documentation.

28.6.3 System Control Block

The **System Control Block** (SCB) provides system implementation information, and system control. This includes configuration, control, and reporting of the system exceptions. The SCB registers are:

All information provided in this document is subject to legal disclaimers. © NXP B.V. 2012. All rights reserved.

Table 448. Summary of the SCB registers

Address	Name	Type	Reset value	Description
0xE000ED00	CPUID	RO	0x410CC200	Section 28.6.3.2
0xE000ED04	ICSR	RW[1]	0x00000000	Section 28–28.6.3.3
0xE000ED0C	AIRCR	RW[1]	0xFA050000	Section 28–28.6.3.4
0xE000ED10	SCR	RW	0x00000000	Section 28–28.6.3.5
0xE000ED14	CCR	RO	0x00000204	Section 28–28.6.3.6
0xE000ED1C	SHPR2	RW	0x00000000	Section 28–28.6.3.7.1
0xE000ED20	SHPR3	RW	0x00000000	Section 28–28.6.3.7.2

[1] See the register description for more information.

28.6.3.1 The CMSIS mapping of the Cortex-M0 SCB registers

To improve software efficiency, the CMSIS simplifies the SCB register presentation. In the CMSIS, the array SHP[1] corresponds to the registers SHPR2-SHPR3.

28.6.3.2 CPUID Register

The CPUID register contains the processor part number, version, and implementation information. See the register summary in for its attributes. The bit assignments are:

Table 449. CPUID register bit assignments

Bits	Name	Function
[31:24]	Implementer	Implementer code: 0x41 = ARM
[23:20]	Variant	Variant number, the r value in the r**n**p**n** product revision identifier: 0x0 = Revision 0
[19:16]	Constant	Constant that defines the architecture of the processor:, reads as 0xC = ARMv6-M architecture
[15:4]	Partno	Part number of the processor: 0xC20 = Cortex-M0
[3:0]	Revision	Revision number, the p value in the r**n**p**n** product revision identifier: 0x0 = Patch 0

28.6.3.3 Interrupt Control and State Register

The ICSR:

- provides:
  - a set-pending bit for the **Non-Maskable Interrupt** (NMI) exception
  - set-pending and clear-pending bits for the PendSV and SysTick exceptions
- indicates:
  - the exception number of the exception being processed
  - whether there are preempted active exceptions
  - the exception number of the highest priority pending exception

All information provided in this document is subject to legal disclaimers. © NXP B.V. 2012. All rights reserved.

– whether any interrupts are pending.

See the register summary in Table 28–448 for the ICSR attributes. The bit assignments are:

Table 450. ICSR bit assignments

Bits	Name	Type	Function
[31]	NMIPENDSET[2]	RW	NMI set-pending bit. Write: 0 = no effect 1 = changes NMI exception state to pending. Read: 0 = NMI exception is not pending 1 = NMI exception is pending. Because NMI is the highest-priority exception, normally the processor enters the NMI exception handler as soon as it detects a write of 1 to this bit. Entering the handler then clears this bit to 0. This means a read of this bit by the NMI exception handler returns 1 only if the NMI signal is reasserted while the processor is executing that handler.
[30:29]	-	-	Reserved.
[28]	PENDSVSET	RW	PendSV set-pending bit. Write: 0 = no effect 1 = changes PendSV exception state to pending. Read: 0 = PendSV exception is not pending 1 = PendSV exception is pending. Writing 1 to this bit is the only way to set the PendSV exception state to pending.
[27]	PENDSVCLR	WO	PendSV clear-pending bit. Write: 0 = no effect 1 = removes the pending state from the PendSV exception.
[26]	PENDSTSET	RW	SysTick exception set-pending bit. Write: 0 = no effect 1 = changes SysTick exception state to pending. Read: 0 = SysTick exception is not pending 1 = SysTick exception is pending.

All information provided in this document is subject to legal disclaimers.
© NXP B.V. 2012. All rights reserved.

Table 450. ICSR bit assignments

Bits	Name	Type	Function
[25]	PENDSTCLR	WO	SysTick exception clear-pending bit. Write: 0 = no effect 1 = removes the pending state from the SysTick exception. This bit is WO. On a register read its value is Unknown.
[24:23]	-	-	Reserved.
[22]	ISRPENDING	RO	Interrupt pending flag, excluding NMI and Faults: 0 = interrupt not pending 1 = interrupt pending.
[21:18]	-	-	Reserved.
[17:12]	VECTPENDING	RO	Indicates the exception number of the highest priority pending enabled exception: 0 = no pending exceptions Nonzero = the exception number of the highest priority pending enabled exception.
[11:6]	-	-	Reserved.
[5:0]	VECTACTIVE[1]	RO	Contains the active exception number: 0 = Thread mode Nonzero = The exception number[1] of the currently active exception. **Remark:** Subtract 16 from this value to obtain the CMSIS IRQ number that identifies the corresponding bit in the Interrupt Clear-Enable, Set-Enable, Clear-Pending, Set-pending, and Priority Register, see Table 28–422.

[1] This is the same value as IPSR bits[5:0], see Table 28–422.

[2] See Section 28.1 for implementation of the NMI for specific parts..

When you write to the ICSR, the effect is Unpredictable if you:

- write 1 to the PENDSVSET bit and write 1 to the PENDSVCLR bit
- write 1 to the PENDSTSET bit and write 1 to the PENDSTCLR bit.

28.6.3.4 Application Interrupt and Reset Control Register

The AIRCR provides endian status for data accesses and reset control of the system. See the register summary in Table 28–448 and Table 28–451 for its attributes.

To write to this register, you must write `0x05FA` to the VECTKEY field, otherwise the processor ignores the write.

The bit assignments are:

All information provided in this document is subject to legal disclaimers.
© NXP B.V. 2012. All rights reserved.

Table 451. AIRCR bit assignments

Bits	Name	Type	Function
[31:16]	Read: Reserved Write: VECTKEY	RW	Register key: Reads as Unknown On writes, write 0x05FA to VECTKEY, otherwise the write is ignored.
[15]	ENDIANESS	RO	Data endianness implemented: 0 = Little-endian 1 = Big-endian.
[14:3]	-	-	Reserved
[2]	SYSRESETREQ	WO	System reset request: 0 = no effect 1 = requests a system level reset. This bit reads as 0.
[1]	VECTCLRACTIVE	WO	Reserved for debug use. This bit reads as 0. When writing to the register you must write 0 to this bit, otherwise behavior is Unpredictable.
[0]	-	-	Reserved.

28.6.3.5 System Control Register

The SCR controls features of entry to and exit from low power state. See the register summary in Table 28–448 for its attributes. The bit assignments are:

Table 452. SCR bit assignments

Bits	Name	Function
[31:5]	-	Reserved.
[4]	SEVONPEND	Send Event on Pending bit: 0 = only enabled interrupts or events can wake-up the processor, disabled interrupts are excluded 1 = enabled events and all interrupts, including disabled interrupts, can wake-up the processor. When an event or interrupt enters pending state, the event signal wakes up the processor from WFE. If the processor is not waiting for an event, the event is registered and affects the next WFE. The processor also wakes up on execution of an SEV instruction.
[3]	-	Reserved.
[2]	SLEEPDEEP	Controls whether the processor uses sleep or deep sleep as its low power mode: 0 = sleep 1 = deep sleep.
[1]	SLEEPONEXIT	Indicates sleep-on-exit when returning from Handler mode to Thread mode: 0 = do not sleep when returning to Thread mode. 1 = enter sleep, or deep sleep, on return from an ISR to Thread mode. Setting this bit to 1 enables an interrupt driven application to avoid returning to an empty main application.
[0]	-	Reserved.

All information provided in this document is subject to legal disclaimers.
© NXP B.V. 2012. All rights reserved.

28.6.3.6 Configuration and Control Register

The CCR is a read-only register and indicates some aspects of the behavior of the Cortex-M0 processor. See the register summary in Table 28–448 for the CCR attributes.

The bit assignments are:

Table 453. CCR bit assignments

Bits	Name	Function
[31:10]	-	Reserved.
[9]	STKALIGN	Always reads as one, indicates 8-byte stack alignment on exception entry. On exception entry, the processor uses bit[9] of the stacked PSR to indicate the stack alignment. On return from the exception it uses this stacked bit to restore the correct stack alignment.
[8:4]	-	Reserved.
[3]	UNALIGN_TRP	Always reads as one, indicates that all unaligned accesses generate a HardFault.
[2:0]	-	Reserved.

28.6.3.7 System Handler Priority Registers

The SHPR2-SHPR3 registers set the priority level, 0 to 3, of the exception handlers that have configurable priority.

SHPR2-SHPR3 are word accessible. See the register summary in Table 28–448 for their attributes.

To access to the system exception priority level using CMSIS, use the following CMSIS functions:

- `uint32_t NVIC_GetPriority(IRQn_Type IRQn)`
- `void NVIC_SetPriority(IRQn_Type IRQn, uint32_t priority)`

The input parameter `IRQn` is the IRQ number, see Table 28–427 for more information.

The system fault handlers, and the priority field and register for each handler are:

Table 454. System fault handler priority fields

Handler	Field	Register description
SVCall	PRI_11	Section 28–28.6.3.7.1
PendSV	PRI_14	Section 28–28.6.3.7.2
SysTick	PRI_15	

Each PRI_N field is 8 bits wide, but the processor implements only bits[7:6] of each field, and bits[5:0] read as zero and ignore writes.

28.6.3.7.1 System Handler Priority Register 2

The bit assignments are:

All information provided in this document is subject to legal disclaimers.
© NXP B.V. 2012. All rights reserved.

Table 455. SHPR2 register bit assignments

Bits	Name	Function
[31:24]	PRI_11	Priority of system handler 11, SVCall
[23:0]	-	Reserved

28.6.3.7.2 System Handler Priority Register 3

The bit assignments are:

Table 456. SHPR3 register bit assignments

Bits	Name	Function
[31:24]	PRI_15	Priority of system handler 15, SysTick exception
[23:16]	PRI_14	Priority of system handler 14, PendSV
[15:0]	-	Reserved

28.6.3.8 SCB usage hints and tips

Ensure software uses aligned 32-bit word size transactions to access all the SCB registers.

28.6.4 System timer, SysTick

When enabled, the timer counts down from the current value (SYST_CVR) to zero, reloads (wraps) to the value in the SysTick Reload Value Register (SYST_RVR) on the next clock edge, then decrements on subsequent clocks. When the counter transitions to zero, the COUNTFLAG status bit is set to 1. The COUNTFLAG bit clears on reads.

Remark: The SYST_CVR value is UNKNOWN on reset. Software should write to the register to clear it to zero before enabling the feature. This ensures the timer will count from the SYST_RVR value rather than an arbitrary value when it is enabled.

Remark: If the SYST_RVR is zero, the timer will be maintained with a current value of zero after it is reloaded with this value. This mechanism can be used to disable the feature independently from the timer enable bit.

A write to the SYST_CVR will clear the register and the COUNTFLAG status bit. The write causes the SYST_CVR to reload from the SYST_RVR on the next timer clock, however, it does not trigger the SysTick exception logic. On a read, the current value is the value of the register at the time the register is accessed.

Remark: When the processor is halted for debugging the counter does not decrement.

The system timer registers are:

Table 457. System timer registers summary

Address	Name	Type	Reset value	Description
0xE000E010	SYST_CSR	RW	0x00000000	Section 28.6.4.1
0xE000E014	SYST_RVR	RW	Unknown	Section 28–28.6.4.2
0xE000E018	SYST_CVR	RW	Unknown	Section 28–28.6.4.3
0xE000E01C	SYST_CALIB	RO	0x00000004 [1]	Section 28–28.6.4.4

[1] SysTick calibration value.

All information provided in this document is subject to legal disclaimers.
© NXP B.V. 2012. All rights reserved.

28.6.4.1 SysTick Control and Status Register

The SYST_CSR enables the SysTick features. See the register summary in for its attributes. The bit assignments are:

Table 458. SYST_CSR bit assignments

Bits	Name	Function
[31:17]	-	Reserved.
[16]	COUNTFLAG	Returns 1 if timer counted to 0 since the last read of this register.
[15:3]	-	Reserved.
[2]	CLKSOURCE	Selects the SysTick timer clock source: 0 = external reference clock. 1 = processor clock.
[1]	TICKINT	Enables SysTick exception request: 0 = counting down to zero does not assert the SysTick exception request. 1 = counting down to zero asserts the SysTick exception request.
[0]	ENABLE	Enables the counter: 0 = counter disabled. 1 = counter enabled.

28.6.4.2 SysTick Reload Value Register

The SYST_RVR specifies the start value to load into the SYST_CVR. See the register summary in Table 28–457 for its attributes. The bit assignments are:

Table 459. SYST_RVR bit assignments

Bits	Name	Function
[31:24]	-	Reserved.
[23:0]	RELOAD	Value to load into the SYST_CVR when the counter is enabled and when it reaches 0, see Section 28.6.4.2.1.

28.6.4.2.1 Calculating the RELOAD value

The RELOAD value can be any value in the range `0x00000001-0x00FFFFFF`. You can program a value of 0, but this has no effect because the SysTick exception request and COUNTFLAG are activated when counting from 1 to 0.

To generate a multi-shot timer with a period of N processor clock cycles, use a RELOAD value of N-1. For example, if the SysTick interrupt is required every 100 clock pulses, set RELOAD to 99.

28.6.4.3 SysTick Current Value Register

The SYST_CVR contains the current value of the SysTick counter. See the register summary in Table 28–457 for its attributes. The bit assignments are:

All information provided in this document is subject to legal disclaimers.
© NXP B.V. 2012. All rights reserved.

Table 460. SYST_CVR bit assignments

Bits	Name	Function
[31:24]	-	Reserved.
[23:0]	CURRENT	Reads return the current value of the SysTick counter. A write of any value clears the field to 0, and also clears the SYST_CSR.COUNTFLAG bit to 0.

28.6.4.4 SysTick Calibration Value Register

The SYST_CALIB register indicates the SysTick calibration properties. See the register summary in Table 28–457 for its attributes. The bit assignments are:

Table 461. SYST_CALIB register bit assignments

Bits	Name	Function
[31]	NOREF	Reads as one. Indicates that no separate reference clock is provided.
[30]	SKEW	Reads as one. Calibration value for the 10ms inexact timing is not known because TENMS is not known. This can affect the suitability of SysTick as a software real time clock.
[29:24]	-	Reserved.
[23:0]	TENMS	Reads as zero. Indicates calibration value is not known.

If calibration information is not known, calculate the calibration value required from the frequency of the processor clock or external clock.

28.6.4.5 SysTick usage hints and tips

The interrupt controller clock updates the SysTick counter. If this clock signal is stopped for low power mode, the SysTick counter stops.

Ensure software uses word accesses to access the SysTick registers.

If the SysTick counter reload and current value are undefined at reset, the correct initialization sequence for the SysTick counter is:

1. Program reload value.
2. Clear current value.
3. Program Control and Status register.

All information provided in this document is subject to legal disclaimers.
© NXP B.V. 2012. All rights reserved.

28.7 Cortex-M0 instruction summary

Table 462. Cortex M0- instruction summary

Operation	Description	Assembler	Cycles
Move	8-bit immediate	MOVS Rd, #<imm>	1
	Lo to Lo	MOVS Rd, Rm	1
	Any to Any	MOV Rd, Rm	1
	Any to PC	MOV PC, Rm	3
Add	3-bit immediate	ADDS Rd, Rn, #<imm>	1
	All registers Lo	ADDS Rd, Rn, Rm	1
	Any to Any	ADD Rd, Rd, Rm	1
	Any to PC	ADD PC, PC, Rm	3
Add	8-bit immediate	ADDS Rd, Rd, #<imm>	1
	With carry	ADCS Rd, Rd, Rm	1
	Immediate to SP	ADD SP, SP, #<imm>	1
	Form address from SP	ADD Rd, SP, #<imm>	1
	Form address from PC	ADR Rd, <label>	1
Subtract	Lo and Lo	SUBS Rd, Rn, Rm	1
	3-bit immediate	SUBS Rd, Rn, #<imm>	1
	8-bit immediate	SUBS Rd, Rd, #<imm>	1
	With carry	SBCS Rd, Rd, Rm	1
	Immediate from SP	SUB SP, SP, #<imm>	1
	Negate	RSBS Rd, Rn, #0	1
Multiply	Multiply	MULS Rd, Rm, Rd	1
Compare	Compare	CMP Rn, Rm	1
	Negative	CMN Rn, Rm	1
	Immediate	CMP Rn, #<imm>	1
Logical	AND	ANDS Rd, Rd, Rm	1
	Exclusive OR	EORS Rd, Rd, Rm	1
	OR	ORRS Rd, Rd, Rm	1
	Bit clear	BICS Rd, Rd, Rm	1
	Move NOT	MVNS Rd, Rm	1
	AND test	TST Rn, Rm	1
Shift	Logical shift left by immediate	LSLS Rd, Rm, #<shift>	1
	Logical shift left by register	LSLS Rd, Rd, Rs	1
	Logical shift right by immediate	LSRS Rd, Rm, #<shift>	1
	Logical shift right by register	LSRS Rd, Rd, Rs	1
	Arithmetic shift right	ASRS Rd, Rm, #<shift>	1
	Arithmetic shift right by register	ASRS Rd, Rd, Rs	1
Rotate	Rotate right by register	RORS Rd, Rd, Rs	1

All information provided in this document is subject to legal disclaimers.
© NXP B.V. 2012. All rights reserved.

Table 462. Cortex M0- instruction summary

Operation	Description	Assembler	Cycles
Load	Word, immediate offset	LDR Rd, [Rn, #<imm>]	2
	Halfword, immediate offset	LDRH Rd, [Rn, #<imm>]	2
	Byte, immediate offset	LDRB Rd, [Rn, #<imm>]	2
	Word, register offset	LDR Rd, [Rn, Rm]	2
	Halfword, register offset	LDRH Rd, [Rn, Rm]	2
	Signed halfword, register offset	LDRSH Rd, [Rn, Rm]	2
	Byte, register offset	LDRB Rd, [Rn, Rm]	2
	Signed byte, register offset	LDRSB Rd, [Rn, Rm]	2
	PC-relative	LDR Rd, <label>	2
	SP-relative	LDR Rd, [SP, #<imm>]	2
	Multiple, excluding base	LDM Rn!, {<loreglist>}	1 + N[1]
	Multiple, including base	LDM Rn, {<loreglist>}	1 + N[1]
Store	Word, immediate offset	STR Rd, [Rn, #<imm>]	2
Store	Halfword, immediate offset	STRH Rd, [Rn, #<imm>]	2
	Byte, immediate offset	STRB Rd, [Rn, #<imm>]	2
	Word, register offset	STR Rd, [Rn, Rm]	2
	Halfword, register offset	STRH Rd, [Rn, Rm]	2
	Byte, register offset	STRB Rd, [Rn, Rm]	2
	SP-relative	STR Rd, [SP, #<imm>]	2
	Multiple	STM Rn!, {<loreglist>}	1 + N[1]
Push	Push	PUSH {<loreglist>}	1 + N[1]
	Push with link register	PUSH {<loreglist>, LR}	1 + N[1]
Pop	Pop	POP {<loreglist>}	1 + N[1]
	Pop and return	POP {<loreglist>, PC}	4 + N[2]
Branch	Conditional	B<cc> <label>	1 or 3[3]
	Unconditional	B <label>	3
	With link	BL <label>	4
	With exchange	BX Rm	3
	With link and exchange	BLX Rm	3
Extend	Signed halfword to word	SXTH Rd, Rm	1
	Signed byte to word	SXTB Rd, Rm	1
	Unsigned halfword	UXTH Rd, Rm	1
	Unsigned byte	UXTB Rd, Rm	1
Reverse	Bytes in word	REV Rd, Rm	1
	Bytes in both halfwords	REV16 Rd, Rm	1
	Signed bottom half word	REVSH Rd, Rm	1
State change	Supervisor Call	SVC <imm>	-[4]
	Disable interrupts	CPSID i	1
	Enable interrupts	CPSIE i	1
	Read special register	MRS Rd, <specreg>	4
	Write special register	MSR <specreg>, Rn	4

All information provided in this document is subject to legal disclaimers.
© NXP B.V. 2012. All rights reserved.

Table 462. Cortex M0- instruction summary

Operation	Description	Assembler	Cycles
Hint	Send event	SEV	1
	Wait for event	WFE	2[5]
	Wait for interrupt	WFI	2[5]
	Yield	YIELD[6]	1
	No operation	NOP	1
Barriers	Instruction synchronization	ISB	4
	Data memory	DMB	4
	Data synchronization	DSB	4

[1] N is the number of elements.

[2] N is the number of elements in the stack-pop list including PC and assumes load or store does not generate a HardFault exception.

[3] 3 if taken, 1 if not taken.

[4] Cycle count depends on core and debug configuration.

[5] Excludes time spend waiting for an interrupt or event.

[6] Executes as NOP.

All information provided in this document is subject to legal disclaimers.
© NXP B.V. 2012. All rights reserved.

29.1 Abbreviations

Table 463. Abbreviations

Acronym	Description
ADC	Analog-to-Digital Converter
AHB	Advanced High-performance Bus
AMBA	Advanced Microcontroller Bus Architecture
APB	Advanced Peripheral Bus
BOD	BrownOut Detection
GPIO	General Purpose Input/Output
PLL	Phase-Locked Loop
SPI	Serial Peripheral Interface
SSI	Serial Synchronous Interface
TTL	Transistor-Transistor Logic
UART	Universal Asynchronous Receiver/Transmitter

29.2 References

[1] **ARM DUI 0497A —** Cortex-M0 Devices Generic User Guide

[2] **ARM DDI 0432C —** Cortex-M0 Revision r0p0 Technical Reference Manual

[3] **PCF8576D —** PCF8576D Data sheet.

All information provided in this document is subject to legal disclaimers.
© NXP B.V. 2012. All rights reserved.

29.3 Legal information

29.3.1 Definitions

Draft — The document is a draft version only. The content is still under internal review and subject to formal approval, which may result in modifications or additions. NXP Semiconductors does not give any representations or warranties as to the accuracy or completeness of information included herein and shall have no liability for the consequences of use of such information.

29.3.2 Disclaimers

Limited warranty and liability — Information in this document is believed to be accurate and reliable. However, NXP Semiconductors does not give any representations or warranties, expressed or implied, as to the accuracy or completeness of such information and shall have no liability for the consequences of use of such information. NXP Semiconductors takes no responsibility for the content in this document if provided by an information source outside of NXP Semiconductors.

In no event shall NXP Semiconductors be liable for any indirect, incidental, punitive, special or consequential damages (including - without limitation - lost profits, lost savings, business interruption, costs related to the removal or replacement of any products or rework charges) whether or not such damages are based on tort (including negligence), warranty, breach of contract or any other legal theory.

Notwithstanding any damages that customer might incur for any reason whatsoever, NXP Semiconductors' aggregate and cumulative liability towards customer for the products described herein shall be limited in accordance with the *Terms and conditions of commercial sale* of NXP Semiconductors.

Right to make changes — NXP Semiconductors reserves the right to make changes to information published in this document, including without limitation specifications and product descriptions, at any time and without notice. This document supersedes and replaces all information supplied prior to the publication hereof.

Suitability for use — NXP Semiconductors products are not designed, authorized or warranted to be suitable for use in life support, life-critical or safety-critical systems or equipment, nor in applications where failure or malfunction of an NXP Semiconductors product can reasonably be expected to result in personal injury, death or severe property or environmental damage. NXP Semiconductors and its suppliers accept no liability for inclusion and/or use of NXP Semiconductors products in such equipment or applications and therefore such inclusion and/or use is at the customer's own risk.

Applications — Applications that are described herein for any of these products are for illustrative purposes only. NXP Semiconductors makes no representation or warranty that such applications will be suitable for the specified use without further testing or modification.

Customers are responsible for the design and operation of their applications and products using NXP Semiconductors products, and NXP Semiconductors accepts no liability for any assistance with applications or customer product design. It is customer's sole responsibility to determine whether the NXP Semiconductors product is suitable and fit for the customer's applications and products planned, as well as for the planned application and use of customer's third party customer(s). Customers should provide appropriate design and operating safeguards to minimize the risks associated with their applications and products.

NXP Semiconductors does not accept any liability related to any default, damage, costs or problem which is based on any weakness or default in the customer's applications or products, or the application or use by customer's third party customer(s). Customer is responsible for doing all necessary testing for the customer's applications and products using NXP Semiconductors products in order to avoid a default of the applications and the products or of the application or use by customer's third party customer(s). NXP does not accept any liability in this respect.

Export control — This document as well as the item(s) described herein may be subject to export control regulations. Export might require a prior authorization from competent authorities.

29.3.3 Trademarks

Notice: All referenced brands, product names, service names and trademarks are the property of their respective owners.

I²C-bus — logo is a trademark of NXP B.V.

All information provided in this document is subject to legal disclaimers.

© NXP B.V. 2012. All rights reserved.

29.4 Tables

Table 1. LPC111x/LPC11Cxx feature changes 4
Table 2. Ordering information 7
Table 3. Ordering options 9
Table 4. LPC111x memory configuration 16
Table 5. LPC11Cxx memory configuration 16
Table 6. Pin summary 20
Table 7. Register overview: system control block (base address 0x4004 8000) 21
Table 8. System memory remap register (SYSMEMREMAP, address 0x4004 8000) bit description 23
Table 9. Peripheral reset control register (PRESETCTRL, address 0x4004 8004) bit description 23
Table 10. System PLL control register (SYSPLLCTRL, address 0x4004 8008) bit description 24
Table 11. System PLL status register (SYSPLLSTAT, address 0x4004 800C) bit description 25
Table 12. System oscillator control register (SYSOSCCTRL, address 0x4004 8020) bit description 25
Table 13. Watchdog oscillator control register (WDTOSCCTRL, address 0x4004 8024) bit description 26
Table 14. Internal resonant crystal control register (IRCCTRL, address 0x4004 8028) bit description 26
Table 15. System reset status register (SYSRSTSTAT, address 0x4004 8030) bit description 27
Table 16. System PLL clock source select register (SYSPLLCLKSEL, address 0x4004 8040) bit description 27
Table 17. System PLL clock source update enable register (SYSPLLCLKUEN, address 0x4004 8044) bit description 28
Table 18. Main clock source select register (MAINCLKSEL, address 0x4004 8070) bit description 28
Table 19. Main clock source update enable register (MAINCLKUEN, address 0x4004 8074) bit description 29
Table 20. System AHB clock divider register (SYSAHBCLKDIV, address 0x4004 8078) bit description 29
Table 21. System AHB clock control register (SYSAHBCLKCTRL, address 0x4004 8080) bit description 29
Table 22. SPI0 clock divider register (SSP0CLKDIV, address 0x4004 8094) bit description 31
Table 23. UART clock divider register (UARTCLKDIV, address 0x4004 8098) bit description 31
Table 24. SPI1 clock divider register (SSP1CLKDIV, address 0x4004 809C) bit description 32
Table 25. WDT clock source select register (WDTCLKSEL, address 0x4004 80D0) bit description 32
Table 26. WDT clock source update enable register (WDTCLKUEN, address 0x4004 80D4) bit description 32
Table 27. WDT clock divider register (WDTCLKDIV, address 0x4004 80D8) bit description 33
Table 28. CLKOUT clock source select register (CLKOUTCLKSEL, address 0x4004 80E0) bit description 33
Table 29. CLKOUT clock source update enable register (CLKOUTUEN, address 0x4004 80E4) bit description 33
Table 30. CLKOUT clock divider registers (CLKOUTCLKDIV, address 0x4004 80E8) bit description 34
Table 31. POR captured PIO status registers 0 (PIOPORCAP0, address 0x4004 8100) bit description 34
Table 32. POR captured PIO status registers 1 (PIOPORCAP1, address 0x4004 8104) bit description 34
Table 33. BOD control register (BODCTRL, address 0x4004 8150) bit description 35
Table 34. System tick timer calibration register (SYSTCKCAL, address 0x4004 8154) bit description 35
Table 35. NMI source selection register (NMISRC, address 0x4004 8174) bit description 36
Table 36. Start logic edge control register 0 (STARTAPRP0, address 0x4004 8200) bit description 36
Table 37. Start logic signal enable register 0 (STARTERP0, address 0x4004 8204) bit description 37
Table 38. Start logic reset register 0 (STARTRSRP0CLR, address 0x4004 8208) bit description 37
Table 39. Start logic status register 0 (STARTSRP0, address 0x4004 820C) bit description 37
Table 40. Allowed values for PDSLEEPCFG register . . . 38
Table 41. Deep-sleep configuration register (PDSLEEPCFG, address 0x4004 8230) bit description 38
Table 42. Wake-up configuration register (PDAWAKECFG, address 0x4004 8234) bit description 39
Table 43. Power-down configuration register (PDRUNCFG, address 0x4004 8238) bit description 40
Table 44. Device ID register (DEVICE_ID, address 0x4004 83F4) bit description 42
Table 45. PLL frequency parameters 50
Table 46. PLL configuration examples 51
Table 47. Flash configuration register (FLASHCFG, address 0x4003 C010) bit description 52
Table 48. Register overview: PMU (base address 0x4003 8000) 53
Table 49. Power control register (PCON, address 0x4003 8000) bit description 53
Table 50. General purpose registers 0 to 3 (GPREG0 - GPREG3, address 0x4003 8004 to 0x4003 8010) bit description 54
Table 51. General purpose register 4 (GPREG4, address 0x4003 8014) bit description 54
Table 52. set_pll routine 58
Table 53. set_power routine 62

All information provided in this document is subject to legal disclaimers.

© NXP B.V. 2012. All rights reserved.

Table 54. Connection of interrupt sources to the Vectored Interrupt Controller 64
Table 55. Register overview: I/O configuration (base address 0x4004 4000) 69
Table 56. I/O configuration registers ordered by port number 71
Table 57. IOCON_PIO2_6 register (IOCON_PIO2_6, address 0x4004 4000) bit description 72
Table 58. IOCON_PIO2_0 register (IOCON_PIO2_0, address 0x4004 4008) bit description 73
Table 59. IOCON_RESET_PIO0_0 register (IOCON_RESET_PIO0_0, address 0x4004 400C) bit description. 73
Table 60. IOCON_PIO0_1 register (IOCON_PIO0_1, address 0x4004 4010) bit description 74
Table 61. IOCON_PIO1_8 register (IOCON_PIO1_8, address 0x4004 4014) bit description 75
Table 62. IOCON_PIO0_2 register (IOCON_PIO0_2, address 0x4004 401C) bit description 75
Table 63. IOCON_PIO2_7 register (IOCON_PIO2_7, address 0x4004 4020) bit description 76
Table 64. IOCON_PIO2_8 register (IOCON_PIO2_8, address 0x4004 4024) bit description 76
Table 65. IOCON_PIO2_1 register (IOCON_PIO2_1, address 0x4004 4028) bit description 77
Table 66. IOCON_PIO0_3 register (IOCON_PIO0_3, address 0x4004 402C) bit description 78
Table 67. IOCON_PIO0_4 register (IOCON_PIO0_4, address 0x4004 4030) bit description 78
Table 68. IOCON_PIO0_5 register (IOCON_PIO0_5, address 0x4004 4034) bit description 79
Table 69. IOCON_PIO1_9 register (IOCON_PIO1_9, address 0x4004 4038) bit description 79
Table 70. IOCON_PIO3_4 register (IOCON_PIO3_4, address 0x4004 403C) bit description 80
Table 71. IOCON_PIO2_4 register (IOCON_PIO2_4, address 0x4004 4040) bit description 80
Table 72. IOCON_PIO2_5 register (IOCON_PIO2_5, address 0x4004 4044) bit description 81
Table 73. IOCON_PIO3_5 register (IOCON_PIO3_5, address 0x4004 4048) bit description 81
Table 74. IOCON_PIO0_6 register (IOCON_PIO0_6, address 0x4004 404C) bit description 82
Table 75. IOCON_PIO0_7 register (IOCON_PIO0_7, address 0x4004 4050) bit description. 82
Table 76. IOCON_PIO2_9 register (IOCON_PIO2_9, address 0x4004 4054) bit description 83
Table 77. IOCON_PIO2_10 register (IOCON_PIO2_10, address 0x4004 4058) bit description 84
Table 78. IOCON_PIO2_2 register (IOCON_PIO2_2, address 0x4004 405C) bit description 84
Table 79. IOCON_PIO0_8 register (IOCON_PIO0_8, address 0x4004 4060) bit description 85
Table 80. IOCON_PIO0_9 register (IOCON_PIO0_9, address 0x4004 4064) bit description 85
Table 81. IOCON_SWCLK_PIO0_10 register (IOCON_SWCLK_PIO0_10, address 0x4004 4068) bit description 86
Table 82. IOCON_PIO1_10 register (IOCON_PIO1_10, address 0x4004 406C) bit description 87
Table 83. IOCON_PIO2_11 register (IOCON_PIO2_11, address 0x4004 4070) bit description 87
Table 84. IOCON_R_PIO0_11 register (IOCON_R_PIO0_11, address 0x4004 4074) bit description 88
Table 85. IOCON_R_PIO1_0 register (IOCON_R_PIO1_0, address 0x4004 4078) bit description 89
Table 86. IOCON_R_PIO1_1 register (IOCON_R_PIO1_1, address 0x4004 407C) bit description 89
Table 87. IOCON_R_PIO1_2 register (IOCON_R_PIO1_2, address 0x4004 4080) bit description 90
Table 88. IOCON_PIO3_0 register (IOCON_PIO3_0, address 0x4004 4084) bit description 91
Table 89. IOCON_PIO3_1 register (IOCON_PIO3_1, address 0x4004 4088) bit description 91
Table 90. IOCON_PIO2_3 register (IOCON_PIO2_3, address 0x4004 408C) bit description 92
Table 91. IOCON_SWDIO_PIO1_3 register (IOCON_SWDIO_PIO1_3, address 0x4004 4090) bit description 93
Table 92. IOCON_PIO1_4 register (IOCON_PIO1_4, address 0x4004 4094) bit description 93
Table 93. IOCON_PIO1_11 register (IOCON_PIO1_11, address 0x4004 4098) bit description 94
Table 94. IOCON_PIO3_2 register (IOCON_PIO3_2, address 0x4004 409C) bit description 95
Table 95. IOCON_PIO1_5 register (IOCON_PIO1_5, address 0x4004 40A0) bit description 95
Table 96. IOCON_PIO1_6 register (IOCON_PIO1_6, address 0x4004 40A4) bit description 96
Table 97. IOCON_PIO1_7 register (IOCON_PIO1_7, address 0x4004 40A8) bit description 97
Table 98. IOCON_PIO3_3 register (IOCON_PIO3_3, address 0x4004 40AC) bit description 97
Table 99. IOCON SCK location register (IOCON_SCK_LOC, address 0x4004 40B0) bit description 98
Table 100. IOCON DSR location register (IOCON_DSR_LOC, address 0x4004 40B4) bit description 98
Table 101. IOCON DCD location register (IOCON_DCD_LOC, address 0x4004 40B8) bit description 99
Table 102. IOCON RI location register (IOCON_RI_LOC, address 0x4004 40BC) bit description 99
Table 103. Register overview: I/O configuration (base address 0x4004 4000) 103
Table 104. I/O configuration registers ordered by port number. 105
Table 105. IOCON_PIO2_6 register (IOCON_PIO2_6, address 0x4004 4000) bit description 106
Table 106. IOCON_PIO2_0 register (IOCON_PIO2_0, address 0x4004 4008) bit description 107
Table 107. IOCON_RESET_PIO0_0 register (IOCON_RESET_PIO0_0, address 0x4004 400C) bit description 107

All information provided in this document is subject to legal disclaimers.

© NXP B.V. 2012. All rights reserved.

Table 108. IOCON_PIO0_1 register (IOCON_PIO0_1, address 0x4004 4010) bit description 108
Table 109. IOCON_PIO1_8 register (IOCON_PIO1_8, address 0x4004 4014) bit description 109
Table 110. IOCON_PIO0_2 register (IOCON_PIO0_2, address 0x4004 401C) bit description 109
Table 111. IOCON_PIO2_7 register (IOCON_PIO2_7, address 0x4004 4020) bit description 110
Table 112. IOCON_PIO2_8 register (IOCON_PIO2_8, address 0x4004 4024) bit description 110
Table 113. IOCON_PIO2_1 register (IOCON_PIO2_1, address 0x4004 4028) bit description 111
Table 114. IOCON_PIO0_3 register (IOCON_PIO0_3, address 0x4004 402C) bit description 112
Table 115. IOCON_PIO0_4 register (IOCON_PIO0_4, address 0x4004 4030) bit description 112
Table 116. IOCON_PIO0_5 register (IOCON_PIO0_5, address 0x4004 4034) bit description 113
Table 117. IOCON_PIO1_9 register (IOCON_PIO1_9, address 0x4004 4038) bit description 113
Table 118. IOCON_PIO3_4 register (IOCON_PIO3_4, address 0x4004 403C) bit description 114
Table 119. IOCON_PIO2_4 register (IOCON_PIO2_4, address 0x4004 4040) bit description 114
Table 120. IOCON_PIO2_5 register (IOCON_PIO2_5, address 0x4004 4044) bit description 115
Table 121. IOCON_PIO3_5 register (IOCON_PIO3_5, address 0x4004 4048) bit description 115
Table 122. IOCON_PIO0_6 register (IOCON_PIO0_6, address 0x4004 404C) bit description 116
Table 123. IOCON_PIO0_7 register (IOCON_PIO0_7, address 0x4004 4050) bit description. 117
Table 124. IOCON_PIO2_9 register (IOCON_PIO2_9, address 0x4004 4054) bit description 117
Table 125. IOCON_PIO2_10 register (IOCON_PIO2_10, address 0x4004 4058) bit description 118
Table 126. IOCON_PIO2_2 register (IOCON_PIO2_2, address 0x4004 405C) bit description 118
Table 127. IOCON_PIO0_8 register (IOCON_PIO0_8, address 0x4004 4060) bit description 119
Table 128. IOCON_PIO0_9 register (IOCON_PIO0_9, address 0x4004 4064) bit description 119
Table 129. IOCON_SWCLK_PIO0_10 register (IOCON_SWCLK_PIO0_10, address 0x4004 4068) bit description 120
Table 130. IOCON_PIO1_10 register (IOCON_PIO1_10, address 0x4004 406C) bit description 121
Table 131. IOCON_PIO2_11 register (IOCON_PIO2_11, address 0x4004 4070) bit description 121
Table 132. IOCON_R_PIO0_11 register (IOCON_R_PIO0_11, address 0x4004 4074) bit description 122
Table 133. IOCON_R_PIO1_0 register (IOCON_R_PIO1_0, address 0x4004 4078) bit description 123
Table 134. IOCON_R_PIO1_1 register (IOCON_R_PIO1_1, address 0x4004 407C) bit description 123
Table 135. IOCON_R_PIO1_2 register (IOCON_R_PIO1_2, address 0x4004 4080) bit description 124
Table 136. IOCON_PIO3_0 register (IOCON_PIO3_0, address 0x4004 4084) bit description 125
Table 137. IOCON_PIO3_1 register (IOCON_PIO3_1, address 0x4004 4088) bit description 126
Table 138. IOCON_PIO2_3 register (IOCON_PIO2_3, address 0x4004 408C) bit description 126
Table 139. IOCON_SWDIO_PIO1_3 register (IOCON_SWDIO_PIO1_3, address 0x4004 4090) bit description 127
Table 140. IOCON_PIO1_4 register (IOCON_PIO1_4, address 0x4004 4094) bit description 128
Table 141. IOCON_PIO1_11 register (IOCON_PIO1_11, address 0x4004 4098) bit description 128
Table 142. IOCON_PIO3_2 register (IOCON_PIO3_2, address 0x4004 409C) bit description 129
Table 143. IOCON_PIO1_5 register (IOCON_PIO1_5, address 0x4004 40A0) bit description 130
Table 144. IOCON_PIO1_6 register (IOCON_PIO1_6, address 0x4004 40A4) bit description 130
Table 145. IOCON_PIO1_7 register (IOCON_PIO1_7, address 0x4004 40A8) bit description 131
Table 146. IOCON_PIO3_3 register (IOCON_PIO3_3, address 0x4004 40AC) bit description 131
Table 147. IOCON SCK0 location register (IOCON_SCK0_LOC, address 0x4004 40B0) bit description 132
Table 148. IOCON $\overline{\text{DSR}}$ location register (IOCON_DSR_LOC, address 0x4004 40B4) bit description 133
Table 149. IOCON $\overline{\text{DCD}}$ location register (IOCON_DCD_LOC, address 0x4004 40B8) bit description 133
Table 150. IOCON $\overline{\text{RI}}$ location register (IOCON_RI_LOC, address 0x4004 40BC) bit description 133
Table 151. IOCON SSEL1 location register (IOCON_SSEL1_LOC, address 0x4004 4018) bit description 134
Table 152. IOCON CT16B0_CAP0 location register (IOCON_CT16B0_CAP0_LOC, address 0x4004 40C0) bit description 134
Table 153. IOCON SCK1 location register (IOCON_SCK1_LOC, address 0x4004 40C4) bit description 134
Table 154. IOCON MISO1 location register (IOCON_MISO1_LOC, address 0x4004 40C8) bit description 135
Table 155. IOCON MOSI1 location register (IOCON_MOSI1_LOC, address 0x4004 40CC) bit description 135
Table 156. IOCON CT32B0_CAP0 location register (IOCON_CT32B0_CAP0_LOC, address 0x4004 40D0) bit description 135
Table 157. IOCON RXD location register (IOCON_RXD_LOC, address 0x4004 40D4) bit description 136
Table 158. LPC11(D)1x/LPC11Cxx pin configurations . . 137
Table 159. LPC1113/14 and LPC11C12/C14 pin description table (LQFP48 package) 143

All information provided in this document is subject to legal disclaimers.

© NXP B.V. 2012. All rights reserved.

Table 160. LPC1111/12/13/14 pin description table (HVQFN33 package) 147
Table 161. LPC1112FHN24 Pin description table (HVQFN24 package) 149
Table 162. LPC11C24/C22 pin description table (LQFP48 package) 152
Table 163. LPC11D14 pin description table (LQFP100 package) 155
Table 164. LPC11xx pin configurations for 20-pin and 28-pin packages 161
Table 165. LPC1110/11/12 pin description table (SO20 and TSSOP20 package with I^2C-bus pins) 162
Table 166. LPC1112 pin description table (TSSOP20 with V_{DDA} and V_{SSA} pins) 165
Table 167. LPC1112/14 pin description table (TSSOP28 and DIP28 packages) 168
Table 168. LPC1100XL pin configurations. 171
Table 169. LPC1113/14/15XL pin description table (LQFP48 package) 173
Table 170. LPC1111/12/13/14XL pin description table (HVQFN33 package) 179
Table 171. GPIO configuration 183
Table 172. Register overview: GPIO (base address port 0: 0x5000 0000; port 1: 0x5001 0000, port 2: 0x5002 0000; port 3: 0x5003 0000) 184
Table 173. GPIOnDATA register (GPIO0DATA, address 0x5000 0000 to 0x5000 3FFC; GPIO1DATA, address 0x5001 0000 to 0x5001 3FFC; GPIO2DATA, address 0x5002 0000 to 0x5002 3FFC; GPIO3DATA, address 0x5003 0000 to 0x5003 3FFC) bit description 184
Table 174. GPIOnDIR register (GPIO0DIR, address 0x5000 8000 to GPIO3DIR, address 0x5003 8000) bit description 185
Table 175. GPIOnIS register (GPIO0IS, address 0x5000 8004 to GPIO3IS, address 0x5003 8004) bit description 185
Table 176. GPIOnIBE register (GPIO0IBE, address 0x5000 8008 to GPIO3IBE, address 0x5003 8008) bit description 186
Table 177. GPIOnIEV register (GPIO0IEV, address 0x5000 800C to GPIO3IEV, address 0x5003 800C) bit description 186
Table 178. GPIOnIE register (GPIO0IE, address 0x5000 8010 to GPIO3IE, address 0x5003 8010) bit description 186
Table 179. GPIOnRIS register (GPIO0RIS, address 0x5000 8014 to GPIO3RIS, address 0x5003 8014) bit description 187
Table 180. GPIOnMIS register (GPIO0MIS, address 0x5000 8018 to GPIO3MIS, address 0x5003 8018) bit description 187
Table 181. GPIOnIC register (GPIO0IC, address 0x5000 801C to GPIO3IC, address 0x5003 801C) bit description 187
Table 182. UART pin description. 191
Table 183. Register overview: UART (base address: 0x4000 8000) 191
Table 184. UART Receiver Buffer Register (U0RBR - address 0x4000 8000 when DLAB = 0, Read Only) bit description 193
Table 185. UART Transmitter Holding Register (U0THR - address 0x4000 8000 when DLAB = 0, Write Only) bit description 193
Table 186. UART Divisor Latch LSB Register (U0DLL - address 0x4000 8000 when DLAB = 1) bit description 194
Table 187. UART Divisor Latch MSB Register (U0DLM - address 0x4000 8004 when DLAB = 1) bit description 194
Table 188. UART Interrupt Enable Register (U0IER - address 0x4000 8004 when DLAB = 0) bit description 194
Table 189. UART Interrupt Identification Register (U0IIR - address 0x4004 8008, Read Only) bit description 195
Table 190. UART Interrupt Handling. 196
Table 191. UART FIFO Control Register (U0FCR - address 0x4000 8008, Write Only) bit description 198
Table 192. UART Line Control Register (U0LCR - address 0x4000 800C) bit description 198
Table 193. UART0 Modem Control Register (U0MCR - address 0x4000 8010) bit description 199
Table 194. Modem status interrupt generation 201
Table 195. UART Line Status Register (U0LSR - address 0x4000 8014, Read Only) bit description . . . 202
Table 196. UART Modem Status Register (U0MSR - address 0x4000 8018) bit description 204
Table 197. UART Scratch Pad Register (U0SCR - address 0x4000 801C) bit description 204
Table 198. Auto baud Control Register (U0ACR - address 0x4000 8020) bit description 205
Table 199. UART Fractional Divider Register (U0FDR - address 0x4000 8028) bit description 208
Table 200. Fractional Divider setting look-up table 211
Table 201. UART Transmit Enable Register (U0TER - address 0x4000 8030) bit description 212
Table 202. UART RS485 Control register (U0RS485CTRL - address 0x4000 804C) bit description 212
Table 203. UART RS485 Address Match register (U0RS485ADRMATCH - address 0x4000 8050) bit description. 213
Table 204. UART RS485 Delay value register (U0RS485DLY - address 0x4000 8054) bit description 213
Table 205. SPI pin descriptions 218
Table 206. Register overview: SPI0 (base address 0x4004 0000) 219
Table 207. Register overview: SPI1 (base address 0x4005 8000) 219
Table 208: SPI/SSP Control Register 0 (SSP0CR0 - address 0x4004 0000, SSP1CR0 - address 0x4005 8000) bit description. 220
Table 209: SPI/SSP Control Register 1 (SSP0CR1 - address 0x4004 0004, SSP1CR1 - address 0x4005 8004) bit description. 221
Table 210: SPI/SSP Data Register (SSP0DR - address

All information provided in this document is subject to legal disclaimers.

© NXP B.V. 2012. All rights reserved.

0x4004 0008, SSP1DR - address 0x4005 8008) bit description 221
Table 211: SPI/SSP Status Register (SSP0SR - address 0x4004 000C, SSP1SR - address 0x4005 800C) bit description 222
Table 212: SPI/SSP Clock Prescale Register (SSP0CPSR - address 0x4004 0010, SSP1CPSR - address 0x4005 8010) bit description 222
Table 213: SPI/SSP Interrupt Mask Set/Clear register (SSP0IMSC - address 0x4004 0014, SSP1IMSC - address 0x4005 8014) bit description. 223
Table 214: SPI/SSP Raw Interrupt Status register (SSP0RIS - address 0x4004 0018, SSP1RIS - address 0x4005 8018) bit description 223
Table 215: SPI/SSP Masked Interrupt Status register (SSP0MIS - address 0x4004 001C, SSP1MIS - address 0x4005 801C) bit description 224
Table 216: SPI/SSP interrupt Clear Register (SSP0ICR - address 0x4004 0020, SSP1ICR - address 0x4005 8020) bit description 224
Table 217. I^2C-bus pin description. 234
Table 218. Register overview: I^2C (base address 0x4000 0000) 234
Table 219. I^2C Control Set register (I2C0CONSET - address 0x4000 0000) bit description 235
Table 220. I^2C Status register (I2C0STAT - 0x4000 0004) bit description 237
Table 221. I^2C Data register (I2C0DAT - 0x4000 0008) bit description 237
Table 222. I^2C Slave Address register 0 (I2C0ADR0- 0x4000 000C) bit description 238
Table 223. I^2C SCL HIGH Duty Cycle register (I2C0SCLH - address 0x4000 0010) bit description. 238
Table 224. I^2C SCL Low duty cycle register (I2C0SCLL - 0x4000 0014) bit description 238
Table 225. SCLL + SCLH values for selected I^2C clock values 238
Table 226. I^2C Control Clear register (I2C0CONCLR - 0x4000 0018) bit description 239
Table 227. I^2C Monitor mode control register (I2C0MMCTRL - 0x4000 001C) bit description 240
Table 228. I^2C Slave Address registers (I2C0ADR[1, 2, 3]- 0x4000 00[20, 24, 28]) bit description 241
Table 229. I^2C Data buffer register (I2C0DATA_BUFFER - 0x4000 002C) bit description 242
Table 230. I^2C Mask registers (I2C0MASK[0, 1, 2, 3] - 0x4000 00[30, 34, 38, 3C]) bit description . . . 242
Table 231. I2C0CONSET and I2C1CONSET used to configure Master mode. 243
Table 232. I2C0CONSET and I2C1CONSET used to configure Slave mode. 244
Table 233. Abbreviations used to describe an I^2C operation. 250
Table 234. I2C0CONSET used to initialize Master Transmitter mode 250
Table 235. Master Transmitter mode. 252
Table 236. Master Receiver mode. 255
Table 237. I2C0ADR and I2C1ADR usage in Slave Receiver mode 257
Table 238. I2C0CONSET and I2C1CONSET used to initialize Slave Receiver mode 257
Table 239. Slave Receiver mode 258
Table 240. Slave Transmitter mode 262
Table 241. Miscellaneous States 264
Table 242. CAN pin description (LPC11C12/C14) 277
Table 243. CAN pin description (LPC11C22/C24) 277
Table 244. Register overview: CCAN (base address 0x4005 0000) 277
Table 245. CAN control registers (CANCNTL, address 0x4005 0000) bit description 279
Table 246. CAN status register (CANSTAT, address 0x4005 0004) bit description 281
Table 247. CAN error counter (CANEC, address 0x4005 0008) bit description 282
Table 248. CAN bit timing register (CANBT, address 0x4005 000C) bit description 283
Table 249. CAN interrupt register (CANINT, address 0x4005 0010) bit description 284
Table 250. CAN test register (CANTEST, address 0x4005 0014) bit description 284
Table 251. CAN baud rate prescaler extension register (CANBRPE, address 0x4005 0018) bit description 285
Table 252. Message interface registers 286
Table 253. Structure of a message object in the message RAM 286
Table 254. CAN message interface command request registers (CANIF1_CMDREQ, address 0x4005 0020 and CANIF2_CMDREQ, address 0x4005 0080) bit description 287
Table 255. CAN message interface command mask registers (CANIF1_CMDMSK, address 0x4005 0024 and CANIF2_CMDMSK, address 0x4005 0084) bit description - write direction 287
Table 256. CAN message interface command mask registers (CANIF1_CMDMSK, address 0x4005 0024 and CANIF2_CMDMSK, address 0x4005 0084) bit description - read direction 288
Table 257. CAN message interface command mask 1 registers (CANIF1_MSK1, address 0x4005 0028 and CANIF2_MASK1, address 0x4005 0088) bit description 290
Table 258. CAN message interface command mask 2 registers (CANIF1_MSK2, address 0x4005 002C and CANIF2_MASK2, address 0x4005 008C) bit description 290
Table 259. CAN message interface command arbitration 1 registers (CANIF1_ARB1, address 0x4005 0030 and CANIF2_ARB1, address 0x4005 0090) bit description 290
Table 260. CAN message interface command arbitration 2 registers (CANIF1_ARB2, address 0x4005 0034 and CANIF2_ARB2, address 0x4005 0094) bit

All information provided in this document is subject to legal disclaimers.
© NXP B.V. 2012. All rights reserved.

description 291
Table 261. CAN message interface message control registers (CANIF1_MCTRL, address 0x4005 0038 and CANIF2_MCTRL, address 0x4005 0098) bit description 291
Table 262. CAN message interface data A1 registers (CANIF1_DA1, address 0x4005 003C and CANIF2_DA1, address 0x4005 009C) bit description 293
Table 263. CAN message interface data A2 registers (CANIF1_DA2, address 0x4005 0040 and CANIF2_DA2, address 0x4005 00A0) bit description 293
Table 264. CAN message interface data B1 registers (CANIF1_DB1, address 0x4005 0044 and CANIF2_DB1, address 0x4005 00A4) bit description 293
Table 265. CAN message interface data B2 registers (CANIF1_DB2, address 0x4005 0048 and CANIF2_DB2, address 0x4005 00A8) bit description 293
Table 266. CAN transmission request 1 register (CANTXREQ1, address 0x4005 0100) bit description 294
Table 267. CAN transmission request 2 register (CANTXREQ2, address 0x4005 0104) bit description 294
Table 268. CAN new data 1 register (CANND1, address 0x4005 0120) bit description 295
Table 269. CAN new data 2 register (CANND2, address 0x4005 0124) bit description 295
Table 270. CAN interrupt pending 1 register (CANIR1, address 0x4005 0140) bit description. 295
Table 271. CAN interrupt pending 2 register (CANIR2, addresses 0x4005 0144) bit description. 296
Table 272. CAN message valid 1 register (CANMSGV1, addresses 0x4005 0160) bit description. 296
Table 273. CAN message valid 2 register (CANMSGV2, address 0x4005 0164) bit description. 296
Table 274. CAN clock divider register (CANCLKDIV, address 0x4005 0180) bit description 297
Table 275. Initialization of a transmit object. 305
Table 276. Initialization of a receive object 306
Table 277. Parameters of the C_CAN bit time. 310
Table 278. Counter/timer pin description. 326
Table 279. Register overview: 16-bit counter/timer 0 CT16B0 (base address 0x4000 C000) 327
Table 280. Register overview: 16-bit counter/timer 1 CT16B1 (base address 0x4001 0000) 328
Table 281. Interrupt Register (TMR16B0IR - address 0x4000 C000 and TMR16B1IR - address 0x4001 0000) bit description 329
Table 282. Timer Control Register (TMR16B0TCR - address 0x4000 C004 and TMR16B1TCR - address 0x4001 0004) bit description 329
Table 283: Timer counter registers (TMR16B0TC, address 0x4000 C008 and TMR16B1TC 0x4001 0008) bit description 329
Table 284: Prescale registers (TMR16B0PR, address 0x4000 C00C and TMR16B1PR 0x4001 000C) bit description 330
Table 285: Prescale counter registers (TMR16B0PC, address 0x4001 C010 and TMR16B1PC 0x4000 0010) bit description 330
Table 286. Match Control Register (TMR16B0MCR - address 0x4000 C014 and TMR16B1MCR - address 0x4001 0014) bit description 330
Table 287: Match registers (TMR16B0MR0 to 3, addresses 0x4000 C018 to 24 and TMR16B1MR0 to 3, addresses 0x4001 0018 to 24) bit description 332
Table 288. Capture Control Register (TMR16B0CCR - address 0x4000 C028 and TMR16B1CCR - address 0x4001 0028) bit description 332
Table 289: Capture registers (TMR16B0CR0, address 0x4000 C02C and TMR16B1CR0, address 0x4001 002C) bit description 332
Table 290. External Match Register (TMR16B0EMR - address 0x4000 C03C and TMR16B1EMR - address 0x4001 003C) bit description 333
Table 291. External match control 334
Table 292. Count Control Register (TMR16B0CTCR - address 0x4000 C070 and TMR16B1CTCR - address 0x4001 0070) bit description 335
Table 293. PWM Control Register (TMR16B0PWMC - address 0x4000 C074 and TMR16B1PWMC- address 0x4001 0074) bit description 335
Table 294. Counter/timer pin description 340
Table 295. Register overview: 16-bit counter/timer 0 CT16B0 (base address 0x4000 C000) 341
Table 296. Register overview: 16-bit counter/timer 1 CT16B1 (base address 0x4001 0000) 342
Table 297. Interrupt Register (TMR16B0IR - address 0x4000 C000 and TMR16B1IR - address 0x4001 0000) bit description 343
Table 298. Timer Control Register (TMR16B0TCR - address 0x4000 C004 and TMR16B1TCR - address 0x4001 0004) bit description 343
Table 299: Timer counter registers (TMR16B0TC, address 0x4000 C008 and TMR16B1TC 0x4001 0008) bit description 343
Table 300: Prescale registers (TMR16B0PR, address 0x4000 C00C and TMR16B1PR 0x4001 000C) bit description 344
Table 301: Prescale counter registers (TMR16B0PC, address 0x4001 C010 and TMR16B1PC 0x4000 0010) bit description 344
Table 302. Match Control Register (TMR16B0MCR - address 0x4000 C014 and TMR16B1MCR - address 0x4001 0014) bit description 344
Table 303: Match registers (TMR16B0MR0 to 3, addresses 0x4000 C018 to 24 and TMR16B1MR0 to 3, addresses 0x4001 0018 to 24) bit description 346
Table 304. Capture Control Register (TMR16B0CCR - address 0x4000 C028 and TMR16B1CCR - address 0x4001 0028) bit description 346
Table 305: Capture registers (TMR16B0CR0/1, address

All information provided in this document is subject to legal disclaimers.
© NXP B.V. 2012. All rights reserved.

0x4000 C02C/30 and TMR16B1CR0/1, address 0x4001 002C/30) bit description 347
Table 306. External Match Register (TMR16B0EMR - address 0x4000 C03C and TMR16B1EMR - address 0x4001 003C) bit description 347
Table 307. External match control 348
Table 308. Count Control Register (TMR16B0CTCR - address 0x4000 C070 and TMR16B1CTCR - address 0x4001 0070) bit description. 349
Table 309. PWM Control Register (TMR16B0PWMC - address 0x4000 C074 and TMR16B1PWMC- address 0x4001 0074) bit description. 350
Table 310. Counter/timer pin description 355
Table 311. Register overview: 32-bit counter/timer 0 CT32B0 (base address 0x4001 4000) 355
Table 312. Register overview: 32-bit counter/timer 1 CT32B1 (base address 0x4001 8000) 356
Table 313: Interrupt Register (TMR32B0IR - address 0x4001 4000 and TMR32B1IR - address 0x4001 8000) bit description 357
Table 314: Timer Control Register (TMR32B0TCR - address 0x4001 4004 and TMR32B1TCR - address 0x4001 8004) bit description 358
Table 315: Timer counter registers (TMR32B0TC, address 0x4001 4008 and TMR32B1TC 0x4001 8008) bit description 358
Table 316: Prescale registers (TMR32B0PR, address 0x4001 400C and TMR32B1PR 0x4001 800C) bit description 358
Table 317: Prescale counter registers (TMR32B0PC, address 0x4001 4010 and TMR32B1PC 0x4001 8010) bit description 359
Table 318: Match Control Register (TMR32B0MCR - address 0x4001 4014 and TMR32B1MCR - address 0x4001 8014) bit description. 359
Table 319: Match registers (TMR32B0MR0 to 3, addresses 0x4001 4018 to 24 and TMR32B1MR0 to 3, addresses 0x4001 8018 to 24) bit description 360
Table 320: Capture Control Register (TMR32B0CCR - address 0x4001 4028 and TMR32B1CCR - address 0x4001 8028) bit description. 360
Table 321: Capture registers (TMR32B0CR0, addresses 0x4001 402C and TMR32B1CR0, addresses 0x4001 802C) bit description 361
Table 322: External Match Register (TMR32B0EMR - address 0x4001 403C and TMR32B1EMR - address0x4001 803C) bit description 362
Table 323. External match control 363
Table 324: Count Control Register (TMR32B0CTCR - address 0x4001 4070 and TMR32B1TCR - address 0x4001 8070) bit description 364
Table 325: PWM Control Register (TMR32B0PWMC - 0x4001 4074 and TMR32B1PWMC - 0x4001 8074) bit description 364
Table 326. Counter/timer pin description 369
Table 327. Register overview: 32-bit counter/timer 0 CT32B0 (base address 0x4001 4000) 370
Table 328. Register overview: 32-bit counter/timer 1 CT32B1 (base address 0x4001 8000) 371
Table 329: Interrupt Register (TMR32B0IR - address 0x4001 4000 and TMR32B1IR - address 0x4001 8000) bit description 372
Table 330: Timer Control Register (TMR32B0TCR - address 0x4001 4004 and TMR32B1TCR - address 0x4001 8004) bit description 372
Table 331: Timer counter registers (TMR32B0TC, address 0x4001 4008 and TMR32B1TC 0x4001 8008) bit description 372
Table 332: Prescale registers (TMR32B0PR, address 0x4001 400C and TMR32B1PR 0x4001 800C) bit description 373
Table 333: Prescale counter registers (TMR32B0PC, address 0x4001 4010 and TMR32B1PC 0x4001 8010) bit description 373
Table 334: Match Control Register (TMR32B0MCR - address 0x4001 4014 and TMR32B1MCR - address 0x4001 8014) bit description 373
Table 335: Match registers (TMR32B0MR0 to 3, addresses 0x4001 4018 to 24 and TMR32B1MR0 to 3, addresses 0x4001 8018 to 24) bit description 375
Table 336: Capture Control Register (TMR32B0CCR - address 0x4001 4028 and TMR32B1CCR - address 0x4001 8028) bit description 375
Table 337: Capture registers (TMR32B0CR0/1, addresses 0x4001 402C/30 and TMR32B1CR0/1, addresses 0x4001 802C/30) bit description 376
Table 338: External Match Register (TMR32B0EMR - address 0x4001 403C and TMR32B1EMR - address0x4001 803C) bit description 376
Table 339. External match control 377
Table 340: Count Control Register (TMR32B0CTCR - address 0x4001 4070 and TMR32B1TCR - address 0x4001 8070) bit description 378
Table 341: PWM Control Register (TMR32B0PWMC - 0x4001 4074 and TMR32B1PWMC - 0x4001 8074) bit description. 379
Table 342. Register overview: Watchdog timer (base address 0x4000 4000) 386
Table 343: Watchdog Mode register (WDMOD - 0x4000 4000) bit description 386
Table 344. Watchdog operating modes selection 387
Table 345: Watchdog Timer Constant register (WDTC - 0x4000 4004) bit description 388
Table 346: Watchdog Feed register (WDFEED - 0x4000 4008) bit description 388
Table 347: Watchdog Timer Value register (WDTV - 0x4000 400C) bit description 388
Table 348: Watchdog Timer Warning Interrupt register (WDWARNINT - 0x4000 4014) bit description 389
Table 349: Watchdog Timer Window register (WDWINDOW - 0x4000 4018) bit description 389
Table 350. Register overview: Watchdog timer (base address 0x4000 4000) 393
Table 351. Watchdog Mode register (WDMOD - address 0x4000 4000) bit description 393
Table 352. Watchdog operating modes selection 394

All information provided in this document is subject to legal disclaimers.
© NXP B.V. 2012. All rights reserved.

Table 353. Watchdog Constant register (WDTC - address 0x4000 4004) bit description 394
Table 354. Watchdog Feed register (WDFEED - address 0x4000 4008) bit description 395
Table 355. Watchdog Timer Value register (WDTV - address 0x4000 000C) bit description 395
Table 356. Register overview: SysTick timer (base address 0xE000 E000). 397
Table 357. SysTick Timer Control and status register (SYST_CSR - 0xE000 E010) bit description .398
Table 358. System Timer Reload value register (SYST_RVR - 0xE000 E014) bit description 398
Table 359. System Timer Current value register (SYST_CVR - 0xE000 E018) bit description 398
Table 360. System Timer Calibration value register (SYST_CALIB - 0xE000 E01C) bit description 399
Table 361. ADC pin description 401
Table 362. Register overview: ADC (base address 0x4001 C000) 401
Table 363. A/D Control Register (AD0CR - address 0x4001 C000) bit description 402
Table 364. A/D Global Data Register (AD0GDR - address 0x4001 C004) bit description 403
Table 365. A/D Interrupt Enable Register (AD0INTEN - address 0x4001 C00C) bit description 404
Table 366. A/D Data Registers (AD0DR0 to AD0DR7 - addresses 0x4001 C010 to 0x4001 C02C) bit description 404
Table 367. A/D Status Register (AD0STAT - address 0x4001 C030) bit description 405
Table 368. LPC111x/LPC11Cx flash configurations. 406
Table 369. LPC111x flash configuration (LPC1100, LPC1100L, LPC1100C series) 411
Table 370. LPC1100XL flash configuration 411
Table 371. Code Read Protection options. 413
Table 372. Code Read Protection hardware/software interaction 413
Table 373. ISP commands allowed for different CRP levels 414
Table 374. UART ISP command summary 416
Table 375. UART ISP Unlock command 417
Table 376. UART ISP Set Baud Rate command 417
Table 377. UART ISP Echo command 417
Table 378. UART ISP Write to RAM command 418
Table 379. UART ISP Read Memory command 418
Table 380. UART ISP Prepare sector(s) for write operation command 419
Table 381. UART ISP Copy RAM to flash command. . . .420
Table 382. UART ISP Go command 420
Table 383. UART ISP Erase sector command 421
Table 384. UART ISP Blank check sector command . . . 421
Table 385. UART ISP Read Part Identification command421
Table 386. LPC111x and LPC11Cxx part identification numbers 422
Table 387. UART ISP Read Boot Code version number command 423
Table 388. UART ISP Compare command 423
Table 389. UART ISP ReadUID command 424
Table 390. UART ISP Return Codes Summary 424
Table 391. C_CAN ISP and UART ISP command summary 425
Table 392. C_CAN ISP object directory 426
Table 393. C_CAN ISP SDO abort codes. 428
Table 394. IAP Command Summary 430
Table 395. IAP Prepare sector(s) for write operation command 431
Table 396. IAP Copy RAM to flash command. 432
Table 397. IAP Erase Sector(s) command 432
Table 398. IAP Blank check sector(s) command 433
Table 399. IAP Read Part Identification command 433
Table 400. IAP Read Boot Code version number command 433
Table 401. IAP Compare command 434
Table 402. IAP Reinvoke ISP 435
Table 403. IAP ReadUID command 435
Table 404. IAP Erase page command 435
Table 405. IAP Status Codes Summary 436
Table 406. Memory mapping in debug mode 436
Table 407. Flash configuration register (FLASHCFG, address 0x4003 C010) bit description 437
Table 408. Register overview: FMC (base address 0x4003 C000) 438
Table 409. Flash Module Signature Start register (FMSSTART - 0x4003 C020) bit description . 439
Table 410. Flash Module Signature Stop register (FMSSTOP - 0x4003 C024) bit description 439
Table 411. FMSW0 register bit description (FMSW0, address: 0x4003 C02C) 439
Table 412. FMSW1 register bit description (FMSW1, address: 0x4003 C030) 439
Table 413. FMSW2 register bit description (FMSW2, address: 0x4003 C034) 439
Table 414. FMSW3 register bit description (FMSW3, address: 0x4003 40C8) 439
Table 415. Flash module Status register (FMSTAT - 0x4003 CFE0) bit description 440
Table 416. Flash Module Status Clear register (FMSTATCLR - 0x0x4003 CFE8) bit description. 440
Table 417. Serial Wire Debug pin description. 442
Table 418. Summary of processor mode and stack use options 446

continued >>

All information provided in this document is subject to legal disclaimers.

© NXP B.V. 2012. All rights reserved.

Table 419. Core register set summary. 447
Table 420. PSR register combinations 448
Table 421. APSR bit assignments 449
Table 422. IPSR bit assignments. 449
Table 423. EPSR bit assignments 450
Table 424. PRIMASK register bit assignments 450
Table 425. CONTROL register bit assignments 451
Table 426. Memory access behavior 455
Table 427. Properties of different exception types. 457
Table 428. Exception return behavior 462
Table 429. Cortex-M0 instructions 465
Table 430. CMSIS intrinsic functions to generate some Cortex-M0 instructions 466
Table 431. CMSIS intrinsic functions to access the special registers 467
Table 432. Condition code suffixes 472
Table 433. Access instructions 472
Table 434. Data processing instructions 478
Table 435. ADC, ADD, RSB, SBC and SUB operand restrictions 480
Table 436. Branch and control instructions 487
Table 437. Branch ranges 488
Table 438. Miscellaneous instructions 489
Table 439. Core peripheral register regions 496
Table 440. NVIC register summary 497
Table 441. CMISIS access NVIC functions 497
Table 442. ISER bit assignments. 498
Table 443. ICER bit assignments 498
Table 444. ISPR bit assignments. 498
Table 445. ICPR bit assignments 499
Table 446. IPR bit assignments 499
Table 447. CMSIS functions for NVIC control 501
Table 448. Summary of the SCB registers 502
Table 449. CPUID register bit assignments. 502
Table 450. ICSR bit assignments 503
Table 451. AIRCR bit assignments 505
Table 452. SCR bit assignments 505
Table 453. CCR bit assignments 506
Table 454. System fault handler priority fields. 506
Table 455. SHPR2 register bit assignments 507
Table 456. SHPR3 register bit assignments 507
Table 457. System timer registers summary 507
Table 458. SYST_CSR bit assignments 508
Table 459. SYST_RVR bit assignments 508
Table 460. SYST_CVR bit assignments 509
Table 461. SYST_CALIB register bit assignments 509
Table 462. Cortex M0- instruction summary 510
Table 463. Abbreviations 513

All information provided in this document is subject to legal disclaimers.
© NXP B.V. 2012. All rights reserved.

29.5 Figures

Fig 1. LPC111x block diagram (LPC1100 and LPC1100L series) 11
Fig 2. LPC111x block diagram (LPC1100XL series) . . . 12
Fig 3. LPC11Cxx/LPC11D14 block diagram (LPC1100C series and LPC11D14) 13
Fig 4. LPC11D14 block diagram 14
Fig 5. PCF8576D block diagram 14
Fig 6. LPC111x/LPC11Cxx memory map (LPC1100 and LPC1100L series) 17
Fig 7. LPC111x memory map (LPC1100XL series) 18
Fig 8. LPC111x/LPC11Cxx CGU block diagram 21
Fig 9. Start-up timing 43
Fig 10. System PLL block diagram 49
Fig 11. Power profiles pointer structure 56
Fig 12. LPC111x/102/202/302 clock configuration for power API use 57
Fig 13. Power profiles usage 61
Fig 14. Standard I/O pin configuration 67
Fig 15. Standard I/O pin configuration 101
Fig 16. Pin configuration LQFP48 package 138
Fig 17. Pin configuration HVQFN33 package 139
Fig 18. Pin configuration HVQFN24 package 139
Fig 19. Pin configuration LQFP48 package 140
Fig 20. Pin configuration (LPC11C22/C24) 141
Fig 21. Pin configuration LQFP100 package 142
Fig 22. Pin configuration SO20 package 161
Fig 23. Pin configuration TSSOP20 package with I^2C-bus pins 162
Fig 24. Pin configuration TSSOP20 package with V_{DDA} and V_{SSA} pins 164
Fig 25. Pin configuration TSSOP28 package 167
Fig 26. Pin configuration DIP28 package. 167
Fig 27. Pin configuration LQFP48 package 172
Fig 28. Pin configuration HVQFN33 package 173
Fig 29. Masked write operation to the GPIODATA register 188
Fig 30. Masked read operation 189
Fig 31. Auto-RTS Functional Timing 201
Fig 32. Auto-CTS Functional Timing 202
Fig 33. Auto-baud a) mode 0 and b) mode 1 waveform 207
Fig 34. Algorithm for setting UART dividers. 210
Fig 35. UART block diagram 216
Fig 36. Texas Instruments Synchronous Serial Frame Format: a) Single and b) Continuous/back-to-back Two Frames Transfer. 225
Fig 37. SPI frame format with CPOL=0 and CPHA=0 (a) Single and b) Continuous Transfer) 226
Fig 38. SPI frame format with CPOL=0 and CPHA=1 . . 227
Fig 39. SPI frame format with CPOL = 1 and CPHA = 0 (a) Single and b) Continuous Transfer) 228
Fig 40. SPI Frame Format with CPOL = 1 and CPHA = 1. 229
Fig 41. Microwire frame format (single transfer) 230
Fig 42. Microwire frame format (continuous transfers) . 230
Fig 43. Microwire frame format setup and hold details . 231
Fig 44. I^2C-bus configuration 233
Fig 45. Format in the Master Transmitter mode 243
Fig 46. Format of Master Receiver mode 244
Fig 47. A Master Receiver switches to Master Transmitter after sending Repeated START 244
Fig 48. Format of Slave Receiver mode 245
Fig 49. Format of Slave Transmitter mode 245
Fig 50. I^2C serial interface block diagram 246
Fig 51. Arbitration procedure. 248
Fig 52. Serial clock synchronization 248
Fig 53. Format and states in the Master Transmitter mode 253
Fig 54. Format and states in the Master Receiver mode 256
Fig 55. Format and states in the Slave Receiver mode 260
Fig 56. Format and states in the Slave Transmitter mode 263
Fig 57. Simultaneous Repeated START conditions from two masters 265
Fig 58. Forced access to a busy I^2C-bus 265
Fig 59. Recovering from a bus obstruction caused by a LOW level on SDA 266
Fig 60. C_CAN block diagram. 276
Fig 61. CAN core in Silent mode. 299
Fig 62. CAN core in Loop-back mode 300
Fig 63. CAN core in Loop-back mode combined with Silent mode 300
Fig 64. Block diagram of a message object transfer . . 302
Fig 65. Reading a message from the FIFO buffer to the message buffer 308
Fig 66. Bit timing 311
Fig 67. CAN API pointer structure. 313
Fig 68. Sample PWM waveforms with a PWM cycle length of 100 (selected by MR3) and MAT3:0 enabled as PWM outputs by the PWCON register. 337
Fig 69. A timer cycle in which PR=2, MRx=6, and both interrupt and reset on match are enabled 337
Fig 70. A timer cycle in which PR=2, MRx=6, and both interrupt and stop on match are enabled 337
Fig 71. 16-bit counter/timer block diagram 338
Fig 72. Sample PWM waveforms with a PWM cycle length of 100 (selected by MR3) and MAT3:0 enabled as PWM outputs by the PWCON register. 351
Fig 73. A timer cycle in which PR=2, MRx=6, and both interrupt and reset on match are enabled 352
Fig 74. A timer cycle in which PR=2, MRx=6, and both interrupt and stop on match are enabled 352
Fig 75. 16-bit counter/timer block diagram 353
Fig 76. Sample PWM waveforms with a PWM cycle length of 100 (selected by MR3) and MAT3:0 enabled as PWM outputs by the PWCON register. 366
Fig 77. A timer cycle in which PR=2, MRx=6, and both interrupt and reset on match are enabled 366
Fig 78. A timer cycle in which PR=2, MRx=6, and both interrupt and stop on match are enabled 366
Fig 79. 32-bit counter/timer block diagram 367
Fig 80. A timer cycle in which PR=2, MRx=6, and both

All information provided in this document is subject to legal disclaimers.

© NXP B.V. 2012. All rights reserved.

interrupt and reset on match are enabled 380
Fig 81. A timer cycle in which PR=2, MRx=6, and both interrupt and stop on match are enabled 381
Fig 82. Sample PWM waveforms with a PWM cycle length of 100 (selected by MR3) and MAT3:0 enabled as PWM outputs by the PWMC register. 381
Fig 83. 32-bit counter/timer block diagram. 382
Fig 84. Windowed Watchdog Timer (WWDT) block diagram 385
Fig 85. Early Watchdog Feed with Windowed Mode Enabled 389
Fig 86. Correct Watchdog Feed with Windowed Mode Enabled 390
Fig 87. Watchdog Warning Interrupt 390
Fig 88. Watchdog block diagram 395
Fig 89. System tick timer block diagram 396
Fig 90. Boot process flowchart 410
Fig 91. IAP parameter passing 431
Fig 92. Algorithm for generating a 128-bit signature . . . 441
Fig 93. Connecting the SWD pins to a standard SWD connector 443
Fig 94. Cortex-M0 implementation. 444
Fig 95. Processor core register set 447
Fig 96. APSR, IPSR, EPSR register bit assignments . . 448
Fig 97. Generic ARM Cortex-M0 memory map 453
Fig 98. Memory ordering restrictions 454
Fig 99. Little-endian format 456
Fig 100. Vector table 459
Fig 101. Exception entry stack contents 461
Fig 102. ASR #3 468
Fig 103. LSR #3 469
Fig 104. LSL #3 469
Fig 105. ROR #3 470
Fig 106. IPR register 499

All information provided in this document is subject to legal disclaimers.
© NXP B.V. 2012. All rights reserved.

29.6 Contents

Chapter 1: LPC111x/LPC11Cxx Introductory information

1.1 Introduction . . . 3
1.2 Features . . . 5
1.3 Ordering information . . . 7
1.4 Block diagram . . . 11
1.5 ARM Cortex-M0 processor . . . 15

Chapter 2: LPC111x/LPC11Cxx Memory mapping

2.1 How to read this chapter . . . 16
2.2 Memory map . . . 16

Chapter 3: LPC111x/LPC11Cxx System configuration (SYSCON)

3.1 How to read this chapter . . . 19
DEVICE_ID register . . . 19
C_CAN controller . . . 19
Entering Deep power-down mode . . . 19
Enabling sequence for UART clock . . . 19
NMI source selection register . . . 19
3.2 General description . . . 19
3.3 Pin description . . . 19
3.4 Clock generation . . . 20
3.5 Register description . . . 21
3.5.1 System memory remap register . . . 23
3.5.2 Peripheral reset control register . . . 23
3.5.3 System PLL control register . . . 24
3.5.4 System PLL status register . . . 24
3.5.5 System oscillator control register . . . 25
3.5.6 Watchdog oscillator control register . . . 25
3.5.7 Internal resonant crystal control register . . . 26
3.5.8 System reset status register . . . 26
3.5.9 System PLL clock source select register . . . 27
3.5.10 System PLL clock source update enable register . . . 28
3.5.11 Main clock source select register . . . 28
3.5.12 Main clock source update enable register . . . 28
3.5.13 System AHB clock divider register . . . 29
3.5.14 System AHB clock control register . . . 29
3.5.15 SPI0 clock divider register . . . 31
3.5.16 UART clock divider register . . . 31
3.5.17 SPI1 clock divider register . . . 31
3.5.18 WDT clock source select register . . . 32
3.5.19 WDT clock source update enable register . . . 32
3.5.20 WDT clock divider register . . . 32
3.5.21 CLKOUT clock source select register . . . 33
3.5.22 CLKOUT clock source update enable register 33
3.5.23 CLKOUT clock divider register . . . 34
3.5.24 POR captured PIO status register 0 . . . 34
3.5.25 POR captured PIO status register 1 . . . 34
3.5.26 BOD control register . . . 35
3.5.27 System tick counter calibration register . . . 35
3.5.28 NMI source selection register . . . 35
3.5.29 Start logic edge control register 0 . . . 36
3.5.30 Start logic signal enable register 0 . . . 36
3.5.31 Start logic reset register 0 . . . 37
3.5.32 Start logic status register 0 . . . 37
3.5.33 Deep-sleep mode configuration register . . . 38
3.5.34 Wake-up configuration register . . . 39
3.5.35 Power-down configuration register . . . 40
3.5.36 Device ID register . . . 41
3.6 Reset . . . 42
3.7 Start-up behavior . . . 43
3.8 Brown-out detection . . . 43
3.9 Power management . . . 44
3.9.1 Active mode . . . 44
3.9.1.1 Power configuration in Active mode . . . 44
3.9.2 Sleep mode . . . 44
3.9.2.1 Power configuration in Sleep mode . . . 44
3.9.2.2 Programming Sleep mode . . . 45
3.9.2.3 Wake-up from Sleep mode . . . 45
3.9.3 Deep-sleep mode . . . 45
3.9.3.1 Power configuration in Deep-sleep mode . . . 45
3.9.3.2 Programming Deep-sleep mode . . . 45
3.9.3.3 Wake-up from Deep-sleep mode . . . 46
3.9.4 Deep power-down mode . . . 46
3.9.4.1 Power configuration in Deep power-down mode . 47
3.9.4.2 Programming Deep power-down mode . . . 47
3.9.4.3 Wake-up from Deep power-down mode . . . 47
3.10 Deep-sleep mode details . . . 48
3.10.1 IRC oscillator . . . 48
3.10.2 Start logic . . . 48
3.10.3 Using the general purpose counter/timers to create a self-wake-up event . . . 48
3.11 System PLL functional description . . . 49
3.11.1 Lock detector . . . 49
3.11.2 Power-down control . . . 50
3.11.3 Divider ratio programming . . . 50
Post divider . . . 50
Feedback divider . . . 50
Changing the divider values . . . 50
3.11.4 Frequency selection . . . 50
3.11.4.1 Normal mode . . . 51
3.11.4.2 Power-down mode . . . 51
3.12 Flash memory access . . . 51

All information provided in this document is subject to legal disclaimers.

© NXP B.V. 2012. All rights reserved.

Chapter 4: LPC111x/LPC11Cxx Power Monitor Unit (PMU)

4.1 How to read this chapter . . . 53
4.2 Introduction . . . 53
4.3 Register description . . . 53
4.3.1 Power control register . . . 53
4.3.2 General purpose registers 0 to 3 . . . 54
4.3.3 General purpose register 4 . . . 54
4.4 Functional description . . . 55

Chapter 5: LPC111x/LPC11Cxx Power profiles

5.1 How to read this chapter . . . 56
5.2 Features . . . 56
5.3 Description . . . 56
5.4 Definitions . . . 57
5.5 Clocking routine . . . 57
5.5.1 set_pll . . . 57
5.5.1.1 Param0: system PLL input frequency and Param1: expected system clock . . . 58
5.5.1.2 Param2: mode . . . 58
5.5.1.3 Param3: system PLL lock time-out . . . 59
5.5.1.4 Code examples . . . 59
5.5.1.4.1 Invalid frequency (device maximum clock rate exceeded) . . . 59
5.5.1.4.2 Invalid frequency selection (system clock divider restrictions) . . . 59
5.5.1.4.3 Exact solution cannot be found (PLL) . . . 60
5.5.1.4.4 System clock less than or equal to the expected value . . . 60
5.5.1.4.5 System clock greater than or equal to the expected value . . . 60
5.5.1.4.6 System clock approximately equal to the expected value . . . 60
5.6 Power routine . . . 61
5.6.1 set_power . . . 61
5.6.1.1 Param0: main clock . . . 62
5.6.1.2 Param1: mode . . . 62
5.6.1.3 Param2: system clock . . . 62
5.6.1.4 Code examples . . . 63
5.6.1.4.1 Invalid frequency (device maximum clock rate exceeded) . . . 63
5.6.1.4.2 An applicable power setup . . . 63

Chapter 6: LPC111x/LPC11Cxx Nested Vectored Interrupt Controller (NVIC)

6.1 How to read this chapter . . . 64
6.2 Introduction . . . 64
6.3 Features . . . 64
6.4 Interrupt sources . . . 64

Chapter 7: LPC1100/LPC1100C/LPC1100L series: I/O configuration (IOCONFIG)

7.1 How to read this chapter . . . 66
Pin configuration . . . 66
C_CAN pins . . . 66
Pseudo open-drain function . . . 66
Pull-up level . . . 66
7.2 Features . . . 66
7.3 General description . . . 67
7.3.1 Pin function . . . 67
7.3.2 Pin mode . . . 68
7.3.3 Hysteresis . . . 68
7.3.4 A/D-mode . . . 68
7.3.5 I^2C mode . . . 68
7.3.6 Open-drain Mode . . . 69
7.4 Register description . . . 69
7.4.1 IOCON_PIO2_6 . . . 72
7.4.2 IOCON_PIO2_0 . . . 73
7.4.3 IOCON_PIO_RESET_PIO0_0 . . . 73
7.4.4 IOCON_PIO0_1 . . . 74
7.4.5 IOCON_PIO1_8 . . . 75
7.4.6 IOCON_PIO0_2 . . . 75
7.4.7 IOCON_PIO2_7 . . . 76
7.4.8 IOCON_PIO2_8 . . . 76
7.4.9 IOCON_PIO2_1 . . . 77
7.4.10 IOCON_PIO0_3 . . . 78
7.4.11 IOCON_PIO0_4 . . . 78
7.4.12 IOCON_PIO0_5 . . . 79
7.4.13 IOCON_PIO1_9 . . . 79
7.4.14 IOCON_PIO3_4 . . . 79
7.4.15 IOCON_PIO2_4 . . . 80
7.4.16 IOCON_PIO2_5 . . . 81
7.4.17 IOCON_PIO3_5 . . . 81
7.4.18 IOCON_PIO0_6 . . . 82
7.4.19 IOCON_PIO0_7 . . . 82
7.4.20 IOCON_PIO2_9 . . . 83
7.4.21 IOCON_PIO2_10 . . . 84
7.4.22 IOCON_PIO2_2 . . . 84
7.4.23 IOCON_PIO0_8 . . . 85
7.4.24 IOCON_PIO0_9 . . . 85
7.4.25 IOCON_SWCLK_PIO0_10 . . . 86
7.4.26 IOCON_PIO1_10 . . . 87
7.4.27 IOCON_PIO2_11 . . . 87
7.4.28 IOCON_R_PIO0_11 . . . 88
7.4.29 IOCON_R_PIO1_0 . . . 89
7.4.30 IOCON_R_PIO1_1 . . . 89
7.4.31 IOCON_R_PIO1_2 . . . 90
7.4.32 IOCON_PIO3_0 . . . 91
7.4.33 IOCON_PIO3_1 . . . 91
7.4.34 IOCON_PIO2_3 . . . 92
7.4.35 IOCON_SWDIO_PIO1_3 . . . 93

All information provided in this document is subject to legal disclaimers.

© NXP B.V. 2012. All rights reserved.

7.4.36 IOCON_PIO1_4 93
7.4.37 IOCON_PIO1_11 94
7.4.38 IOCON_PIO3_2 95
7.4.39 IOCON_PIO1_5 95
7.4.40 IOCON_PIO1_6 96
7.4.41 IOCON_PIO1_7 97
7.4.42 IOCON_PIO3_3 97
7.4.43 IOCON_SCK_LOC 98
7.4.44 IOCON_DSR_LOC 98
7.4.45 IOCON_DCD_LOC 99
7.4.46 IOCON_RI_LOC 99

Chapter 8: LPC1100XL series: I/O configuration (IOCONFIG)

8.1 How to read this chapter 100
8.2 Features 100
8.3 General description 100
8.3.1 Pin function 101
8.3.2 Pin mode 101
8.3.3 Hysteresis 102
8.3.4 A/D-mode 102
8.3.5 I^2C mode 102
8.3.6 Open-drain Mode 102
8.4 Register description 102
8.4.1 IOCON_PIO2_6 106
8.4.2 IOCON_PIO2_0 107
8.4.3 IOCON_PIO_RESET_PIO0_0 107
8.4.4 IOCON_PIO0_1 108
8.4.5 IOCON_PIO1_8 109
8.4.6 IOCON_PIO0_2 109
8.4.7 IOCON_PIO2_7 110
8.4.8 IOCON_PIO2_8 110
8.4.9 IOCON_PIO2_1 111
8.4.10 IOCON_PIO0_3 112
8.4.11 IOCON_PIO0_4 112
8.4.12 IOCON_PIO0_5 113
8.4.13 IOCON_PIO1_9 113
8.4.14 IOCON_PIO3_4 113
8.4.15 IOCON_PIO2_4 114
8.4.16 IOCON_PIO2_5 115
8.4.17 IOCON_PIO3_5 115
8.4.18 IOCON_PIO0_6 116
8.4.19 IOCON_PIO0_7 117
8.4.20 IOCON_PIO2_9 117
8.4.21 IOCON_PIO2_10 118
8.4.22 IOCON_PIO2_2 118
8.4.23 IOCON_PIO0_8 119
8.4.24 IOCON_PIO0_9 119
8.4.25 IOCON_SWCLK_PIO0_10 120
8.4.26 IOCON_PIO1_10 121
8.4.27 IOCON_PIO2_11 121
8.4.28 IOCON_R_PIO0_11 122
8.4.29 IOCON_R_PIO1_0 123
8.4.30 IOCON_R_PIO1_1 123
8.4.31 IOCON_R_PIO1_2 124
8.4.32 IOCON_PIO3_0 125
8.4.33 IOCON_PIO3_1 126
8.4.34 IOCON_PIO2_3 126
8.4.35 IOCON_SWDIO_PIO1_3 127
8.4.36 IOCON_PIO1_4 128
8.4.37 IOCON_PIO1_11 128
8.4.38 IOCON_PIO3_2 129
8.4.39 IOCON_PIO1_5 130
8.4.40 IOCON_PIO1_6 130
8.4.41 IOCON_PIO1_7 131
8.4.42 IOCON_PIO3_3 131
8.4.43 IOCON_SCK0_LOC 132
8.4.44 IOCON_DSR_LOC 133
8.4.45 IOCON_DCD_LOC 133
8.4.46 IOCON_RI_LOC 133
8.4.47 IOCON_SSEL1_LOC 134
8.4.48 IOCON_CT16B0_CAP0_LOC 134
8.4.49 IOCON_SCK1_LOC 134
8.4.50 IOCON_MISO1_LOC 135
8.4.51 IOCON_MOSI1_LOC 135
8.4.52 IOCON_CT32B0_CAP0_LOC 135
8.4.53 IOCON_RXD_LOC 136

Chapter 9: LPC111x/LPC11Cxx Pin configuration (LPC1100, LPC1100C, and LPC1100L series, HVQFN/LQFP packages)

9.1 How to read this chapter 137
9.2 LPC111x Pin configuration 138
9.3 LPC11Cxx Pin configuration 140
9.4 LPC11D14 Pin configuration 142
9.5 LPC111x/LPC11Cxx Pin description 143

Chapter 10: LPC111x Pin configuration (LPC1100L series, TSSOP, DIP, SO packages)

10.1 How to read this chapter 161
10.2 Pin configuration (LPC1110/11/12) 161
10.3 Pin configuration (LPC1112) 164
10.4 Pin configuration (LPC1112/14) 167

Chapter 11: LPC111x Pin configuration (LPC1100XL series, HVQFN/LQFP packages)

11.1 How to read this chapter 171
11.2 LPC111x Pin configuration 172
11.3 LPC1100XL Pin description 173

All information provided in this document is subject to legal disclaimers.
© NXP B.V. 2012. All rights reserved.

Chapter 12: LPC111x/LPC11Cxx General Purpose I/O (GPIO)

12.1 How to read this chapter . . . 183
12.2 Introduction . . . 183
12.2.1 Features . . . 183
12.3 Register description . . . 184
12.3.1 GPIO data register . . . 184
12.3.2 GPIO data direction register . . . 185
12.3.3 GPIO interrupt sense register . . . 185
12.3.4 GPIO interrupt both edges sense register . . . 186
12.3.5 GPIO interrupt event register . . . 186
12.3.6 GPIO interrupt mask register . . . 186
12.3.7 GPIO raw interrupt status register . . . 186
12.3.8 GPIO masked interrupt status register . . . 187
12.3.9 GPIO interrupt clear register . . . 187
12.4 Functional description . . . 188
12.4.1 Write/read data operation . . . 188
Write operation . . . 188
Read operation . . . 189

Chapter 13: LPC111x/LPC11Cxx UART

13.1 How to read this chapter . . . 190
13.2 Basic configuration . . . 190
13.3 Features . . . 190
13.4 Pin description . . . 191
13.5 Register description . . . 191
13.5.1 UART Receiver Buffer Register (U0RBR - 0x4000 8000, when DLAB = 0, Read Only) . 193
13.5.2 UART Transmitter Holding Register (U0THR - 0x4000 8000 when DLAB = 0, Write Only) . . 193
13.5.3 UART Divisor Latch LSB and MSB Registers (U0DLL - 0x4000 8000 and U0DLM - 0x4000 8004, when DLAB = 1) . . . 193
13.5.4 UART Interrupt Enable Register (U0IER - 0x4000 8004, when DLAB = 0) . . . 194
13.5.5 UART Interrupt Identification Register (U0IIR - 0x4004 8008, Read Only) . . . 195
13.5.6 UART FIFO Control Register (U0FCR - 0x4000 8008, Write Only) . . . 197
13.5.7 UART Line Control Register (U0LCR - 0x4000 800C) . . . 198
13.5.8 UART Modem Control Register . . . 199
13.5.8.1 Auto-flow control . . . 200
13.5.8.1.1 Auto-RTS . . . 200
13.5.8.1.2 Auto-CTS . . . 201
13.5.9 UART Line Status Register (U0LSR - 0x4000 8014, Read Only) . . . 202
13.5.10 UART Modem Status Register . . . 204
13.5.11 UART Scratch Pad Register (U0SCR - 0x4000 801C) . . . 204
13.5.12 UART Auto-baud Control Register (U0ACR - 0x4000 8020) . . . 205
13.5.13 Auto-baud . . . 205
13.5.14 Auto-baud modes . . . 206
13.5.15 UART Fractional Divider Register (U0FDR - 0x4000 8028) . . . 208
13.5.15.1 Baud rate calculation . . . 209
13.5.15.1.1 Example 1: UART_PCLK = 14.7456 MHz, BR = 9600 . . . 211
13.5.15.1.2 Example 2: UART_PCLK = 12 MHz, BR = 115200 . . . 211
13.5.16 UART Transmit Enable Register (U0TER - 0x4000 8030) . . . 211
13.5.17 UART RS485 Control register (U0RS485CTRL - 0x4000 804C) . . . 212
13.5.18 UART RS485 Address Match register (U0RS485ADRMATCH - 0x4000 8050) . . . 213
13.5.19 UART1 RS485 Delay value register (U0RS485DLY - 0x4000 8054) . . . 213
13.5.20 RS-485/EIA-485 modes of operation . . . 213
RS-485/EIA-485 Normal Multidrop Mode (NMM) . . . 214
RS-485/EIA-485 Auto Address Detection (AAD) mode . . . 214
RS-485/EIA-485 Auto Direction Control . . . 214
RS485/EIA-485 driver delay time . . . 215
RS485/EIA-485 output inversion . . . 215
13.6 Architecture . . . 215

Chapter 14: LPC111x/LPC11Cxx SPI0/1 with SSP

14.1 How to read this chapter . . . 217
14.2 Basic configuration . . . 217
14.3 Features . . . 217
14.4 General description . . . 217
14.5 Pin description . . . 218
14.6 Register description . . . 219
14.6.1 SPI/SSP Control Register 0 . . . 219
14.6.2 SPI/SSP0 Control Register 1 . . . 220
14.6.3 SPI/SSP Data Register . . . 221
14.6.4 SPI/SSP Status Register . . . 222
14.6.5 SPI/SSP Clock Prescale Register . . . 222
14.6.6 SPI/SSP Interrupt Mask Set/Clear Register 222
14.6.7 SPI/SSP Raw Interrupt Status Register . . . 223
14.6.8 SPI/SSP Masked Interrupt Status Register . 223
14.6.9 SPI/SSP Interrupt Clear Register . . . 224
14.7 Functional description . . . 224
14.7.1 Texas Instruments synchronous serial frame format . . . 224
14.7.2 SPI frame format . . . 225
14.7.2.1 Clock Polarity (CPOL) and Phase (CPHA) control . . . 225
14.7.2.2 SPI format with CPOL=0,CPHA=0 . . . 226

All information provided in this document is subject to legal disclaimers.
© NXP B.V. 2012. All rights reserved.

14.7.2.3 SPI format with CPOL=0,CPHA=1 227
14.7.2.4 SPI format with CPOL = 1,CPHA = 0 227
14.7.2.5 SPI format with CPOL = 1,CPHA = 1 229
14.7.3 Semiconductor Microwire frame format 229
14.7.3.1 Setup and hold time requirements on CS with respect to SK in Microwire mode 231

Chapter 15: LPC111x/LPC11Cxx I2C-bus controller

15.1 How to read this chapter 232
15.2 Basic configuration 232
15.3 Features 232
15.4 Applications 232
15.5 General description 233
15.5.1 I²C Fast-mode Plus 233
15.6 Pin description 234
15.7 Register description 234
15.7.1 I²C Control Set register (I2C0CONSET - 0x4000 0000) 235
15.7.2 I²C Status register (I2C0STAT - 0x4000 0004) . . . 237
15.7.3 I²C Data register (I2C0DAT - 0x4000 0008) . 237
15.7.4 I²C Slave Address register 0 (I2C0ADR0- 0x4000 000C) 237
15.7.5 I²C SCL HIGH and LOW duty cycle registers (I2C0SCLH - 0x4000 0010 and I2C0SCLL- 0x4000 0014) 238
15.7.5.1 Selecting the appropriate I²C data rate and duty cycle 238
15.7.6 I²C Control Clear register (I2C0CONCLR - 0x4000 0018) 239
15.7.7 I²C Monitor mode control register (I2C0MMCTRL - 0x4000 001C) 239
15.7.7.1 Interrupt in Monitor mode 240
15.7.7.2 Loss of arbitration in Monitor mode 241
15.7.8 I²C Slave Address registers (I2C0ADR[1, 2, 3] - 0x4000 00[20, 24, 28]) 241
15.7.9 I²C Data buffer register (I2C0DATA_BUFFER - 0x4000 002C) 241
15.7.10 I²C Mask registers (I2C0MASK[0, 1, 2, 3] - 0x4000 00[30, 34, 38, 3C]) 242
15.8 I²C operating modes 242
15.8.1 Master Transmitter mode 242
15.8.2 Master Receiver mode 243
15.8.3 Slave Receiver mode 244
15.8.4 Slave Transmitter mode 245
15.9 I²C implementation and operation 245
15.9.1 Input filters and output stages. 246
15.9.2 Address Registers, ADDR0 to ADDR3 247
15.9.3 Address mask registers, MASK0 to MASK3. 247
15.9.4 Comparator 247
15.9.5 Shift register, DAT 247
15.9.6 Arbitration and synchronization logic 247
15.9.7 Serial clock generator 248
15.9.8 Timing and control 249
15.9.9 Control register, CONSET and CONCLR . . . 249
15.9.10 Status decoder and status register 249
15.10 Details of I²C operating modes 249
15.10.1 Master Transmitter mode 250
15.10.2 Master Receiver mode 254
15.10.3 Slave Receiver mode 257
15.10.4 Slave Transmitter mode 261
15.10.5 Miscellaneous states 263
15.10.5.1 STAT = 0xF8 263
15.10.5.2 STAT = 0x00 263
15.10.6 Some special cases 264
15.10.6.1 Simultaneous Repeated START conditions from two masters 264
15.10.6.2 Data transfer after loss of arbitration 265
15.10.6.3 Forced access to the I²C-bus. 265
15.10.6.4 I²C-bus obstructed by a LOW level on SCL or SDA 266
15.10.6.5 Bus error 266
15.10.7 I²C state service routines 266
15.10.8 Initialization 267
15.10.9 I²C interrupt service 267
15.10.10 The state service routines 267
15.10.11 Adapting state services to an application. . . 267
15.11 Software example 267
15.11.1 Initialization routine 267
15.11.2 Start Master Transmit function 267
15.11.3 Start Master Receive function 268
15.11.4 I²C interrupt routine 268
15.11.5 Non mode specific states 268
15.11.5.1 State: 0x00 268
15.11.5.2 Master States 268
15.11.5.3 State: 0x08 268
15.11.5.4 State: 0x10 269
15.11.6 Master Transmitter states 269
15.11.6.1 State: 0x18 269
15.11.6.2 State: 0x20 269
15.11.6.3 State: 0x28 269
15.11.6.4 State: 0x30 270
15.11.6.5 State: 0x38 270
15.11.7 Master Receive states 270
15.11.7.1 State: 0x40 270
15.11.7.2 State: 0x48 270
15.11.7.3 State: 0x50 270
15.11.7.4 State: 0x58 271
15.11.8 Slave Receiver states 271
15.11.8.1 State: 0x60 271
15.11.8.2 State: 0x68 271
15.11.8.3 State: 0x70 271
15.11.8.4 State: 0x78 272
15.11.8.5 State: 0x80 272
15.11.8.6 State: 0x88 272
15.11.8.7 State: 0x90 272
15.11.8.8 State: 0x98 273
15.11.8.9 State: 0xA0. 273
15.11.9 Slave Transmitter states 273
15.11.9.1 State: 0xA8. 273
15.11.9.2 State: 0xB0. 273

All information provided in this document is subject to legal disclaimers.
© NXP B.V. 2012. All rights reserved.

15.11.9.3 State: 0xB8 273
15.11.9.4 State: 0xC0 274
15.11.9.5 State: 0xC8 274

Chapter 16: LPC111x/LPC11Cxx C_CAN controller

16.1 How to read this chapter 275
16.2 Basic configuration 275
16.3 Features 275
16.4 General description 276
16.5 Pin description 277
16.6 Register description 277
16.6.1 CAN protocol registers 279
16.6.1.1 CAN control register 279
16.6.1.2 CAN status register 280
16.6.1.3 CAN error counter 282
16.6.1.4 CAN bit timing register 283
Baud rate prescaler 283
Time segments 1 and 2 283
Synchronization jump width 283
16.6.1.5 CAN interrupt register 284
16.6.1.6 CAN test register 284
16.6.1.7 CAN baud rate prescaler extension register 285
16.6.2 Message interface registers 285
16.6.2.1 Message objects 286
16.6.2.2 CAN message interface command request registers 286
16.6.2.3 CAN message interface command mask registers 287
16.6.2.4 IF1 and IF2 message buffer registers 289
16.6.2.4.1 CAN message interface command mask 1 registers 290
16.6.2.4.2 CAN message interface command mask 2 registers 290
16.6.2.4.3 CAN message interface command arbitration 1 registers 290
16.6.2.4.4 CAN message interface command arbitration 2 registers 291
16.6.2.4.5 CAN message interface message control registers 291
16.6.2.4.6 CAN message interface data A1 registers . 292
16.6.2.4.7 CAN message interface data A2 registers . . 293
16.6.2.4.8 CAN message interface data B1 registers . 293
16.6.2.4.9 CAN message interface data B2 registers . 293
16.6.3 Message handler registers 293
16.6.3.1 CAN transmission request 1 register 294
16.6.3.2 CAN transmission request 2 register 294
16.6.3.3 CAN new data 1 register 294
16.6.3.4 CAN new data 2 register 295
16.6.3.5 CAN interrupt pending 1 register 295
16.6.3.6 CAN interrupt pending 2 register 296
16.6.3.7 CAN message valid 1 register 296
16.6.3.8 CAN message valid 2 register 296
16.6.4 CAN timing register 297
16.6.4.1 CAN clock divider register 297
16.7 Functional description 297
16.7.1 C_CAN controller state after reset 297
16.7.2 C_CAN operating modes 297
16.7.2.1 Software initialization 297
16.7.2.2 CAN message transfer 298
16.7.2.3 Disabled Automatic Retransmission (DAR) . 298
16.7.2.4 Test modes 299
16.7.2.4.1 Silent mode 299
16.7.2.4.2 Loop-back mode 299
16.7.2.4.3 Loop-back mode combined with Silent mode 300
16.7.2.4.4 Basic mode 300
16.7.2.4.5 Software control of pin CAN_TXD 301
16.7.3 CAN message handler 301
16.7.3.1 Management of message objects 302
16.7.3.2 Data Transfer between IFx Registers and the Message RAM 303
16.7.3.3 Transmission of messages between the shift registers in the CAN core and the Message buffer 303
16.7.3.4 Acceptance filtering of received messages . 304
16.7.3.4.1 Reception of a data frame 304
16.7.3.4.2 Reception of a remote frame 304
16.7.3.5 Receive/transmit priority 305
16.7.3.6 Configuration of a transmit object 305
16.7.3.7 Updating a transmit object 305
16.7.3.8 Configuration of a receive object 306
16.7.3.9 Handling of received messages 306
16.7.3.10 Configuration of a FIFO buffer 307
16.7.3.10.1 Reception of messages with FIFO buffers . 307
16.7.3.10.2 Reading from a FIFO buffer 307
16.7.4 Interrupt handling 308
16.7.5 Bit timing 309
16.7.5.1 Bit time and bit rate 310

Chapter 17: LPC11Cxx C_CAN on-chip drivers

17.1 How to read this chapter 312
17.2 Features 312
17.3 General description 312
17.3.1 Differences to fully-compliant CANopen 312
17.4 API description 313
17.4.1 Calling the C_CAN API 313
17.4.2 CAN initialization 314
17.4.3 CAN interrupt handler 314
17.4.4 CAN Rx message object configuration 314
17.4.5 CAN receive 315
17.4.6 CAN transmit 315
17.4.7 CANopen configuration 316
17.4.8 CANopen handler 317
17.4.9 CAN/CANopen callback functions 318
17.4.10 CAN message received callback 318
17.4.11 CAN message transmit callback 319
17.4.12 CAN error callback 319

All information provided in this document is subject to legal disclaimers.
© NXP B.V. 2012. All rights reserved.

17.4.13 CANopen SDO expedited read callback. . . . 320
17.4.14 CANopen SDO expedited write callback . . . 320
17.4.15 CANopen SDO segmented read callback . . 321
17.4.16 CANopen SDO segmented write callback . . 322
17.4.17 CANopen fall-back SDO handler callback . . 323

Chapter 18: LPC1100/LPC1100C/LPC1100L series: 16-bit counter/timer CT16B0/1

18.1 How to read this chapter 325
Pin-out variations 325
18.2 Basic configuration 325
18.3 Features 325
18.4 Applications 326
18.5 Description 326
18.6 Pin description 326
18.7 Register description 326
18.7.1 Interrupt Register (TMR16B0IR and TMR16B1IR). 328
18.7.2 Timer Control Register (TMR16B0TCR and TMR16B1TCR). 329
18.7.3 Timer Counter (TMR16B0TC - address 0x4000 C008 and TMR16B1TC - address 0x4001 0008) 329
18.7.4 Prescale Register (TMR16B0PR - address 0x4000 C00C and TMR16B1PR - address 0x4001 000C). 329
18.7.5 Prescale Counter register (TMR16B0PC - address 0x4000 C010 and TMR16B1PC - address 0x4001 0010) 330
18.7.6 Match Control Register (TMR16B0MCR and TMR16B1MCR) 330
18.7.7 Match Registers (TMR16B0MR0/1/2/3 - addresses 0x4000 C018/1C/20/24 and TMR16B1MR0/1/2/3 - addresses 0x4001 0018/1C/20/24) 331
18.7.8 Capture Control Register (TMR16B0CCR and TMR16B1CCR) 332
18.7.9 Capture Register (CT16B0CR0 - address 0x4000 C02C and CT16B1CR0 - address 0x4001 002C) 332
18.7.10 External Match Register (TMR16B0EMR and TMR16B1EMR) 333
18.7.11 Count Control Register (TMR16B0CTCR and TMR16B1CTCR) 334
18.7.12 PWM Control register (TMR16B0PWMC and TMR16B1PWMC) 335
18.7.13 Rules for single edge controlled PWM outputs 336
18.8 Example timer operation 337
18.9 Architecture 338

Chapter 19: LPC1100XL series: 16-bit counter/timer CT16B0/1

19.1 How to read this chapter 339
19.2 Basic configuration 339
19.3 Features 339
19.4 Applications 340
19.5 Description 340
19.6 Pin description 340
19.7 Register description 340
19.7.1 Interrupt Register (TMR16B0IR and TMR16B1IR). 343
19.7.2 Timer Control Register (TMR16B0TCR and TMR16B1TCR). 343
19.7.3 Timer Counter (TMR16B0TC - address 0x4000 C008 and TMR16B1TC - address 0x4001 0008) 343
19.7.4 Prescale Register (TMR16B0PR - address 0x4000 C00C and TMR16B1PR - address 0x4001 000C). 344
19.7.5 Prescale Counter register (TMR16B0PC - address 0x4000 C010 and TMR16B1PC - address 0x4001 0010) 344
19.7.6 Match Control Register (TMR16B0MCR and TMR16B1MCR) 344
19.7.7 Match Registers (TMR16B0MR0/1/2/3 - addresses 0x4000 C018/1C/20/24 and TMR16B1MR0/1/2/3 - addresses 0x4001 0018/1C/20/24) 345
19.7.8 Capture Control Register (TMR16B0CCR and TMR16B1CCR) 346
19.7.9 Capture Register (CT16B0CR0/1 - address 0x4000 C02C/30 and CT16B1CR0/1 - address 0x4001 002C/30) 347
19.7.10 External Match Register (TMR16B0EMR and TMR16B1EMR) 347
19.7.11 Count Control Register (TMR16B0CTCR and TMR16B1CTCR) 349
19.7.12 PWM Control register (TMR16B0PWMC and TMR16B1PWMC) 350
19.7.13 Rules for single edge controlled PWM outputs 351
19.8 Example timer operation 352
19.9 Architecture 352

Chapter 20: LPC1100/LPC1100C/LPC1100L series: 32-bit counter/timer CT32B0/1

20.1 How to read this chapter 354
20.2 Basic configuration 354
20.3 Features 354
20.4 Applications 354
20.5 Description 355
20.6 Pin description 355

All information provided in this document is subject to legal disclaimers.
© NXP B.V. 2012. All rights reserved.

20.7 Register description 355
20.7.1 Interrupt Register (TMR32B0IR and TMR32B1IR). 357
20.7.2 Timer Control Register (TMR32B0TCR and TMR32B1TCR). 357
20.7.3 Timer Counter (TMR32B0TC - address 0x4001 4008 and TMR32B1TC - address 0x4001 8008) 358
20.7.4 Prescale Register (TMR32B0PR - address 0x4001 400C and TMR32B1PR - address 0x4001 800C). 358
20.7.5 Prescale Counter Register (TMR32B0PC - address 0x4001 4010 and TMR32B1PC - address 0x4001 8010) 358
20.7.6 Match Control Register (TMR32B0MCR and TMR32B1MCR) 359
20.7.7 Match Registers (TMR32B0MR0/1/2/3 - addresses 0x4001 4018/1C/20/24 and TMR32B1MR0/1/2/3 addresses 0x4001 8018/1C/20/24) 360
20.7.8 Capture Control Register (TMR32B0CCR and TMR32B1CCR) 360
20.7.9 Capture Register (TMR32B0CR0 - address 0x4001 402C and TMR32B1CR0 - address 0x4001 802C) 361
20.7.10 External Match Register (TMR32B0EMR and TMR32B1EMR) 361
20.7.11 Count Control Register (TMR32B0CTCR and TMR32B1TCR) 363
20.7.12 PWM Control Register (TMR32B0PWMC and TMR32B1PWMC) 364
20.7.13 Rules for single edge controlled PWM outputs 365
20.8 Example timer operation 366
20.9 Architecture. 367

Chapter 21: LPC1100XL series: 32-bit counter/timer CT32B0/1

21.1 How to read this chapter. 368
21.2 Basic configuration 368
21.3 Features 368
21.4 Applications 369
21.5 Description 369
21.6 Pin description. 369
21.7 Register description 369
21.7.1 Interrupt Register (TMR32B0IR and TMR32B1IR). 372
21.7.2 Timer Control Register (TMR32B0TCR and TMR32B1TCR). 372
21.7.3 Timer Counter (TMR32B0TC - address 0x4001 4008 and TMR32B1TC - address 0x4001 8008) 372
21.7.4 Prescale Register (TMR32B0PR - address 0x4001 400C and TMR32B1PR - address 0x4001 800C). 373
21.7.5 Prescale Counter Register (TMR32B0PC - address 0x4001 4010 and TMR32B1PC - address 0x4001 8010) 373
21.7.6 Match Control Register (TMR32B0MCR and TMR32B1MCR) 373
21.7.7 Match Registers (TMR32B0MR0/1/2/3 - addresses 0x4001 4018/1C/20/24 and TMR32B1MR0/1/2/3 addresses 0x4001 8018/1C/20/24) 374
21.7.8 Capture Control Register (TMR32B0CCR and TMR32B1CCR) 375
21.7.9 Capture Register (TMR32B0CR0/1 - address 0x4001 402C/30 and TMR32B1CR0/1 - address 0x4001 802C/30) 376
21.7.10 External Match Register (TMR32B0EMR and TMR32B1EMR) 376
21.7.11 Count Control Register (TMR32B0CTCR and TMR32B1TCR) 378
21.7.12 PWM Control Register (TMR32B0PWMC and TMR32B1PWMC) 379
21.8 Functional description 380
21.8.1 Example timer operation 380
21.8.2 Rules for single edge controlled PWM outputs 381
21.9 Architecture. 382

Chapter 22: LPC111x/LPC11Cxx Windowed WatchDog Timer (WDT)

22.1 How to read this chapter. 383
22.2 Basic configuration 383
22.3 Features 383
22.4 Applications 384
22.5 General description 384
22.6 Clock control 385
22.7 Register description 386
22.7.1 Watchdog Mode register 386
22.7.2 Watchdog Timer Constant register 387
22.7.3 Watchdog Feed register 388
22.7.4 Watchdog Timer Value register 388
22.7.5 Watchdog Timer Warning Interrupt register 388
22.7.6 Watchdog Timer Window register 389
22.7.7 Watchdog timing examples 389

Chapter 23: LPC111x/LPC11Cxx WatchDog Timer (WDT)

23.1 How to read this chapter. 391
23.2 Basic configuration. 391

All information provided in this document is subject to legal disclaimers.
© NXP B.V. 2012. All rights reserved.

23.3 Features 391
23.4 Applications 392
23.5 Description 392
23.6 WDT clocking 392
23.7 Register description 393
23.7.1 Watchdog Mode register (WDMOD - 0x4000 0000) 393
23.7.2 Watchdog Timer Constant register (WDTC - 0x4000 4004) 394
23.7.3 Watchdog Feed register (WDFEED - 0x4000 4008) 394
23.7.4 Watchdog Timer Value register (WDTV - 0x4000 400C) 395
23.8 Block diagram 395

Chapter 24: LPC111x/LPC11Cxx System tick timer (SysTick)

24.1 How to read this chapter 396
24.2 Basic configuration 396
24.3 Features 396
24.4 General description 396
24.5 Register description 397
24.5.1 System Timer Control and status register . . 397
24.5.2 System Timer Reload value register 398
24.5.3 System Timer Current value register 398
24.5.4 System Timer Calibration value register (SYST_CALIB - 0xE000 E01C) 399
24.6 Functional description 399
24.7 Example timer calculations 399
Example (system clock = 50 MHz). 399

Chapter 25: LPC111x/LPC11Cxx ADC

25.1 How to read this chapter 400
25.2 Basic configuration 400
25.3 Features 400
25.4 Pin description 400
25.5 Register description 401
25.5.1 A/D Control Register (AD0CR - 0x4001 C000) 402
25.5.2 A/D Global Data Register (AD0GDR - 0x4001 C004) 403
25.5.3 A/D Interrupt Enable Register (AD0INTEN - 0x4001 C00C) 404
25.5.4 A/D Data Registers (AD0DR0 to AD0DR7 - 0x4001 C010 to 0x4001 C02C) 404
25.5.5 A/D Status Register (AD0STAT - 0x4001 C030) . 405
25.6 Operation 405
25.6.1 Hardware-triggered conversion 405
25.6.2 Interrupts 405
25.6.3 Accuracy vs. digital receiver 405

Chapter 26: LPC111x/LPC11Cxx Flash programming firmware

26.1 How to read this chapter 406
26.2 Features 407
26.3 General description 407
26.3.1 Bootloader 407
26.3.2 Memory map after any reset. 408
26.3.3 Criterion for Valid User Code 408
26.3.4 Boot process flowchart 410
26.3.5 Flash configuration for LPC1100, LPC1100C, LPC1100L series 411
26.3.6 Flash configuration for LPC1100XL series . . 411
26.3.7 Flash content protection mechanism 412
26.3.8 Code Read Protection (CRP) 412
26.3.8.1 ISP entry protection 414
26.4 UART Communication protocol 415
26.4.1 UART ISP command format 415
26.4.2 UART ISP response format 415
26.4.3 UART ISP data format 415
26.4.4 UART ISP flow control 415
26.4.5 UART SP command abort 415
26.4.6 Interrupts during UART ISP 415
26.4.7 Interrupts during IAP. 416
26.4.8 RAM used by ISP command handler 416
26.4.9 RAM used by IAP command handler 416
26.5 UART ISP commands 416
26.5.1 Unlock <Unlock code> (UART ISP) 417
26.5.2 Set Baud Rate <Baud Rate> <stop bit> (UART ISP) 417
26.5.3 Echo <setting> (UART ISP) 417
26.5.4 Write to RAM <start address> <number of bytes> (UART ISP) 417
26.5.5 Read Memory <address> <no. of bytes> (UART ISP) 418
26.5.6 Prepare sector(s) for write operation <start sector number> <end sector number> (UART ISP) 419
26.5.7 Copy RAM to flash <Flash address> <RAM address> <no of bytes> (UART ISP) 419
26.5.8 Go <address> <mode> (UART ISP) 420
26.5.9 Erase sector(s) <start sector number> <end sector number> (UART ISP) 421
26.5.10 Blank check sector(s) <sector number> <end sector number> (UART ISP) 421
26.5.11 Read Part Identification number (UART ISP) 421
26.5.12 Read Boot code version number (UART ISP) 423
26.5.13 Compare <address1> <address2> <no of bytes> (UART ISP) 423
26.5.14 ReadUID (UART ISP) 424
26.5.15 UART ISP Return Codes 424
26.6 C_CAN communication protocol. 425

All information provided in this document is subject to legal disclaimers. © NXP B.V. 2012. All rights reserved.

26.6.1 C_CAN ISP SDO communication 425
26.6.2 C_CAN ISP object directory 426
26.6.3 Unlock (C_CAN ISP) 427
26.6.4 Write to RAM (C_CAN ISP) 427
26.6.5 Read memory (C_CAN ISP) 427
26.6.6 Prepare sectors for write operation (C_CAN ISP) 427
26.6.7 Copy RAM to flash (C_CAN ISP) 427
26.6.8 Go (C_CAN ISP) 427
26.6.9 Erase sectors (C_CAN ISP) 427
26.6.10 Blank check sectors (C_CAN ISP) 427
26.6.11 Read PartID (C_CAN ISP) 427
26.6.12 Read boot code version (C_CAN ISP) 428
26.6.13 Read serial number (C_CAN ISP) 428
26.6.14 Compare (C_CAN ISP) 428
26.6.15 C_CAN ISP SDO abort codes 428
26.6.16 Differences to fully-compliant CANopen 429
26.7 IAP commands 429
26.7.1 Prepare sector(s) for write operation (IAP) . . 431
26.7.2 Copy RAM to flash (IAP) 431
26.7.3 Erase Sector(s) (IAP) 432
26.7.4 Blank check sector(s) (IAP) 433
26.7.5 Read Part Identification number (IAP) 433
26.7.6 Read Boot code version number (IAP) 433
26.7.7 Compare <address1> <address2> <no of bytes> (IAP) 434
26.7.8 Reinvoke ISP (IAP) 435
26.7.9 ReadUID (IAP) 435
26.7.10 Erase page 435
26.7.11 IAP Status Codes 436
26.8 Debug notes 436
26.8.1 Comparing flash images 436
26.8.2 Serial Wire Debug (SWD) flash programming interface 436
26.9 Flash memory access 437
26.10 Flash signature generation 438
26.10.1 Register description for signature generation 438
26.10.1.1 Signature generation address and control registers 438
26.10.1.2 Signature generation result registers 439
26.10.1.3 Flash Module Status register 440
26.10.1.4 Flash Module Status Clear register 440
26.10.2 Algorithm and procedure for signature generation 440
Signature generation 440
Content verification 441

Chapter 27: LPC111x/LPC11Cxx Serial Wire Debug (SWD)

27.1 How to read this chapter 442
27.2 Features 442
27.3 Introduction 442
27.4 Description 442
27.5 Pin description 442
27.6 Debug notes 443
27.6.1 Debug limitations 443
27.6.2 Debug connections 443

Chapter 28: LPC111x/LPC11Cxx Appendix: ARM Cortex-M0 reference

28.1 How to read this chapter 444
28.2 Introduction 444
28.3 About the Cortex-M0 processor and core peripherals 444
28.3.1 System-level interface 445
28.3.2 Integrated configurable debug 445
28.3.3 Cortex-M0 processor features summary . . . 445
28.3.4 Cortex-M0 core peripherals 446
28.4 Processor 446
28.4.1 Programmers model 446
28.4.1.1 Processor modes 446
28.4.1.2 Stacks 446
28.4.1.3 Core registers 446
28.4.1.3.1 General-purpose registers 447
28.4.1.3.2 Stack Pointer 447
28.4.1.3.3 Link Register 448
28.4.1.3.4 Program Counter 448
28.4.1.3.5 Program Status Register 448
28.4.1.3.6 Exception mask register 450
28.4.1.3.7 CONTROL register 450
28.4.1.4 Exceptions and interrupts 451
28.4.1.5 Data types 451
28.4.1.6 The Cortex Microcontroller Software Interface Standard 451
28.4.2 Memory model 452
28.4.2.1 Memory regions, types and attributes 453
28.4.2.2 Memory system ordering of memory accesses 454
28.4.2.3 Behavior of memory accesses 454
28.4.2.4 Software ordering of memory accesses 455
28.4.2.5 Memory endianness 456
28.4.2.5.1 Little-endian format 456
28.4.3 Exception model 456
28.4.3.1 Exception states 456
28.4.3.2 Exception types 457
28.4.3.3 Exception handlers 458
28.4.3.4 Vector table 458
28.4.3.5 Exception priorities 459
28.4.3.6 Exception entry and return 460
28.4.3.6.1 Exception entry 460
28.4.3.6.2 Exception return 461
28.4.4 Fault handling 462
28.4.4.1 Lockup 462
28.4.5 Power management 463
28.4.5.1 Entering sleep mode 463
28.4.5.1.1 Wait for interrupt 463
28.4.5.1.2 Wait for event 463
28.4.5.1.3 Sleep-on-exit 464

All information provided in this document is subject to legal disclaimers.
© NXP B.V. 2012. All rights reserved.

28.4.5.2 Wake-up from sleep mode 464
28.4.5.2.1 Wake-up from WFI or sleep-on-exit 464
28.4.5.2.2 Wake-up from WFE 464
28.4.5.3 Power management programming hints. . . . 464
28.5 Instruction set 464
28.5.1 Instruction set summary 464
28.5.2 Intrinsic functions 466
28.5.3 About the instruction descriptions. 467
28.5.3.1 Operands 467
28.5.3.2 Restrictions when using PC or SP 467
28.5.3.3 Shift Operations 468
28.5.3.3.1 ASR 468
28.5.3.3.2 LSR 468
28.5.3.3.3 LSL 469
28.5.3.3.4 ROR 470
28.5.3.4 Address alignment 470
28.5.3.5 PC-relative expressions 470
28.5.3.6 Conditional execution 471
28.5.3.6.1 The condition flags 471
28.5.3.6.2 Condition code suffixes 471
28.5.4 Memory access instructions 472
28.5.4.1 ADR 472
28.5.4.1.1 Syntax. 472
28.5.4.1.2 Operation 473
28.5.4.1.3 Restrictions. 473
28.5.4.1.4 Condition flags 473
28.5.4.1.5 Examples 473
28.5.4.2 LDR and STR, immediate offset. 473
28.5.4.2.1 Syntax. 473
28.5.4.2.2 Operation 473
28.5.4.2.3 Restrictions. 474
28.5.4.2.4 Condition flags 474
28.5.4.2.5 Examples 474
28.5.4.3 LDR and STR, register offset 474
28.5.4.3.1 Syntax. 474
28.5.4.3.2 Operation 475
28.5.4.3.3 Restrictions. 475
28.5.4.3.4 Condition flags 475
28.5.4.3.5 Examples 475
28.5.4.4 LDR, PC-relative. 475
28.5.4.4.1 Syntax. 475
28.5.4.4.2 Operation 475
28.5.4.4.3 Restrictions. 475
28.5.4.4.4 Condition flags 475
28.5.4.4.5 Examples 476
28.5.4.5 LDM and STM 476
28.5.4.5.1 Syntax. 476
28.5.4.5.2 Operation 476
28.5.4.5.3 Restrictions. 476
28.5.4.5.4 Condition flags 477
28.5.4.5.5 Examples 477
28.5.4.5.6 Incorrect examples. 477
28.5.4.6 PUSH and POP 477
28.5.4.6.1 Syntax. 477
28.5.4.6.2 Operation 477
28.5.4.6.3 Restrictions. 477
28.5.4.6.4 Condition flags 478
28.5.4.6.5 Examples 478
28.5.5 General data processing instructions. 478
28.5.5.1 ADC, ADD, RSB, SBC, and SUB. 479
28.5.5.1.1 Syntax 479
28.5.5.1.2 Operation. 479
28.5.5.1.3 Restrictions 480
28.5.5.1.4 Examples. 480
28.5.5.2 AND, ORR, EOR, and BIC. 480
28.5.5.2.1 Syntax 481
28.5.5.2.2 Operation. 481
28.5.5.2.3 Restrictions 481
28.5.5.2.4 Condition flags. 481
28.5.5.2.5 Examples. 481
28.5.5.3 ASR, LSL, LSR, and ROR 481
28.5.5.3.1 Syntax 481
28.5.5.3.2 Operation. 482
28.5.5.3.3 Restrictions 482
28.5.5.3.4 Condition flags. 482
28.5.5.3.5 Examples. 482
28.5.5.4 CMP and CMN. 482
28.5.5.4.1 Syntax 483
28.5.5.4.2 Operation. 483
28.5.5.4.3 Restrictions 483
28.5.5.4.4 Condition flags. 483
28.5.5.4.5 Examples. 483
28.5.5.5 MOV and MVN. 483
28.5.5.5.1 Syntax 483
28.5.5.5.2 Operation. 484
28.5.5.5.3 Restrictions 484
28.5.5.5.4 Condition flags. 484
28.5.5.5.5 Example. 484
28.5.5.6 MULS. 484
28.5.5.6.1 Syntax 484
28.5.5.6.2 Operation. 485
28.5.5.6.3 Restrictions 485
28.5.5.6.4 Condition flags. 485
28.5.5.6.5 Examples. 485
28.5.5.7 REV, REV16, and REVSH. 485
28.5.5.7.1 Syntax 485
28.5.5.7.2 Operation. 485
28.5.5.7.3 Restrictions 486
28.5.5.7.4 Condition flags. 486
28.5.5.7.5 Examples. 486
28.5.5.8 SXT and UXT. 486
28.5.5.8.1 Syntax 486
28.5.5.8.2 Operation. 486
28.5.5.8.3 Restrictions 486
28.5.5.8.4 Condition flags. 486
28.5.5.8.5 Examples. 487
28.5.5.9 TST 487
28.5.5.9.1 Syntax 487
28.5.5.9.2 Operation. 487
28.5.5.9.3 Restrictions 487
28.5.5.9.4 Condition flags. 487
28.5.5.9.5 Examples. 487
28.5.6 Branch and control instructions 487
28.5.6.1 B, BL, BX, and BLX 488
28.5.6.1.1 Syntax 488
28.5.6.1.2 Operation. 488

All information provided in this document is subject to legal disclaimers.
© NXP B.V. 2012. All rights reserved.

28.5.6.1.3 Restrictions . . . 488
28.5.6.1.4 Condition flags . . . 489
28.5.6.1.5 Examples . . . 489
28.5.7 Miscellaneous instructions . . . 489
28.5.7.1 BKPT . . . 490
28.5.7.1.1 Syntax . . . 490
28.5.7.1.2 Operation . . . 490
28.5.7.1.3 Restrictions . . . 490
28.5.7.1.4 Condition flags . . . 490
28.5.7.1.5 Examples . . . 490
28.5.7.2 CPS . . . 490
28.5.7.2.1 Syntax . . . 490
28.5.7.2.2 Operation . . . 490
28.5.7.2.3 Restrictions . . . 491
28.5.7.2.4 Condition flags . . . 491
28.5.7.2.5 Examples . . . 491
28.5.7.3 DMB . . . 491
28.5.7.3.1 Syntax . . . 491
28.5.7.3.2 Operation . . . 491
28.5.7.3.3 Restrictions . . . 491
28.5.7.3.4 Condition flags . . . 491
28.5.7.3.5 Examples . . . 491
28.5.7.4 DSB . . . 491
28.5.7.4.1 Syntax . . . 491
28.5.7.4.2 Operation . . . 491
28.5.7.4.3 Restrictions . . . 491
28.5.7.4.4 Condition flags . . . 492
28.5.7.4.5 Examples . . . 492
28.5.7.5 ISB . . . 492
28.5.7.5.1 Syntax . . . 492
28.5.7.5.2 Operation . . . 492
28.5.7.5.3 Restrictions . . . 492
28.5.7.5.4 Condition flags . . . 492
28.5.7.5.5 Examples . . . 492
28.5.7.6 MRS . . . 492
28.5.7.6.1 Syntax . . . 492
28.5.7.6.2 Operation . . . 492
28.5.7.6.3 Restrictions . . . 492
28.5.7.6.4 Condition flags . . . 493
28.5.7.6.5 Examples . . . 493
28.5.7.7 MSR . . . 493
28.5.7.7.1 Syntax . . . 493
28.5.7.7.2 Operation . . . 493
28.5.7.7.3 Restrictions . . . 493
28.5.7.7.4 Condition flags . . . 493
28.5.7.7.5 Examples . . . 493
28.5.7.8 NOP . . . 493
28.5.7.8.1 Syntax . . . 493
28.5.7.8.2 Operation . . . 493
28.5.7.8.3 Restrictions . . . 493
28.5.7.8.4 Condition flags . . . 494
28.5.7.8.5 Examples . . . 494
28.5.7.9 SEV . . . 494
28.5.7.9.1 Syntax . . . 494
28.5.7.9.2 Operation . . . 494
28.5.7.9.3 Restrictions . . . 494
28.5.7.9.4 Condition flags . . . 494
28.5.7.9.5 Examples . . . 494
28.5.7.10 SVC . . . 494
28.5.7.10.1 Syntax . . . 494
28.5.7.10.2 Operation . . . 494
28.5.7.10.3 Restrictions . . . 494
28.5.7.10.4 Condition flags . . . 494
28.5.7.10.5 Examples . . . 495
28.5.7.11 WFE . . . 495
28.5.7.11.1 Syntax . . . 495
28.5.7.11.2 Operation . . . 495
28.5.7.11.3 Restrictions . . . 495
28.5.7.11.4 Condition flags . . . 495
28.5.7.11.5 Examples . . . 495
28.5.7.12 WFI . . . 495
28.5.7.12.1 Syntax . . . 495
28.5.7.12.2 Operation . . . 496
28.5.7.12.3 Restrictions . . . 496
28.5.7.12.4 Condition flags . . . 496
28.5.7.12.5 Examples . . . 496
28.6 Peripherals . . . 496
28.6.1 About the ARM Cortex-M0 . . . 496
28.6.2 Nested Vectored Interrupt Controller . . . 496
28.6.2.1 Accessing the Cortex-M0 NVIC registers using CMSIS . . . 497
28.6.2.2 Interrupt Set-enable Register . . . 497
28.6.2.3 Interrupt Clear-enable Register . . . 498
28.6.2.4 Interrupt Set-pending Register . . . 498
28.6.2.5 Interrupt Clear-pending Register . . . 499
28.6.2.6 Interrupt Priority Registers . . . 499
28.6.2.7 Level-sensitive and pulse interrupts . . . 500
28.6.2.7.1 Hardware and software control of interrupts 500
28.6.2.8 NVIC usage hints and tips . . . 501
28.6.2.8.1 NVIC programming hints . . . 501
28.6.3 System Control Block . . . 501
28.6.3.1 The CMSIS mapping of the Cortex-M0 SCB registers . . . 502
28.6.3.2 CPUID Register . . . 502
28.6.3.3 Interrupt Control and State Register . . . 502
28.6.3.4 Application Interrupt and Reset Control Register. 504
28.6.3.5 System Control Register . . . 505
28.6.3.6 Configuration and Control Register . . . 506
28.6.3.7 System Handler Priority Registers . . . 506
28.6.3.7.1 System Handler Priority Register 2 . . . 506
28.6.3.7.2 System Handler Priority Register 3 . . . 507
28.6.3.8 SCB usage hints and tips . . . 507
28.6.4 System timer, SysTick . . . 507
28.6.4.1 SysTick Control and Status Register . . . 508
28.6.4.2 SysTick Reload Value Register . . . 508
28.6.4.2.1 Calculating the RELOAD value . . . 508
28.6.4.3 SysTick Current Value Register . . . 508
28.6.4.4 SysTick Calibration Value Register . . . 509
28.6.4.5 SysTick usage hints and tips . . . 509
28.7 Cortex-M0 instruction summary . . . 510

All information provided in this document is subject to legal disclaimers.
© NXP B.V. 2012. All rights reserved.

Chapter 29: Supplementary information

29.1 Abbreviations 513
29.2 References 513
29.3 Legal information 514
29.3.1 Definitions 514
29.3.2 Disclaimers 514
29.3.3 Trademarks 514
29.4 Tables 515
29.5 Figures 524
29.6 Contents 526

Please be aware that important notices concerning this document and the product(s) described herein, have been included in section 'Legal information'.

© NXP B.V. 2012. **All rights reserved.**

For more information, please visit: http://www.nxp.com
For sales office addresses, please send an email to: salesaddresses@nxp.com

Date of release: 24 September 2012
Document identifier: UM10398