Betriebsanleitung • Operating Instructions

Translation of the Original Operating Instructions

Diaphragm Pump

MVP 015-2

PU 0012 BE/E (0910)

PFEIFFER VACUUM

Table of contents

1 About this manual . . . 3
1.1 Validity . . . 3
1.2 Conventions . . . 3

2 Safety . . . 4
2.1 Safety precautions . . . 4
2.2 Proper use . . . 5
2.3 Improper use . . . 5

3 Transport and storage . . . 6
3.1 Transport . . . 6
3.2 Storage . . . 6

4 Product description . . . 7
4.1 Product identification . . . 7
4.2 Function . . . 7

5 Installation . . . 8
5.1 Setting up the pump . . . 8
5.2 Connecting the vacuum side . . . 8
5.3 Connecting the exhaust side . . . 8
5.4 Connecting to the mains power supply . . . 9

6 Operation . . . 11
6.1 Before switching on the pump . . . 11
6.2 Switching on the pump . . . 11
6.3 Pumping condensable vapours . . . 12
6.4 Switching off . . . 12

7 Maintenance . . . 13
7.1 Precautions . . . 13
7.2 Cleaning and replacing diaphragm and valves . . . 14
7.3 Cleaning the gas ballast valve . . . 15
7.4 Replacing the device fuses . . . 16

8 Decommissioning . . . 17
8.1 Shutting down for longer periods . . . 17

9 Malfunctions . . . 17
9.1 Rectifying malfunctions . . . 18

10 Service . . . 19

11 Spare parts . . . 20

12 Accessories . . . 21

13 Technical data and dimensions . . . 22
13.1 General . . . 22
13.2 Technical data . . . 22
13.3 Substances in contact with the media . . . 22
13.4 Dimensions . . . 23

Declaration of conformity . . . 24

1 About this manual

1.1 Validity

This operating manual is for customers of Pfeiffer Vacuum. It describes the functioning of the designated product and provides the most important information for safe use of the unit. The description follows applicable EU guidelines. All information provided in this operating manual refer to the current state of the product's development. The documentation remains valid as long as the customer does not make any changes to the product.

Up-to-date operating instructions can also be downloaded from www.pfeiffer-vacuum.net.

Applicable documents

MVP 015-2	Operating instructions
Safety information for vacuum pumps "Safety Guide"	PT 0300 BN*
Declaration of Conformity	Part of this document
Operating instructions for accessories (order-specifically)	see section "accessories"*

*also available via www.pfeiffer-vacuum.net

For information about other certifications, if applicable, please see the signet on the product or:

- www.tuvdotcom.com
- TUVdotCOM-ID 0000021320

1.2 Conventions

Safety instructions

The safety instructions in Pfeiffer Vacuum operating manuals are the result of risk evaluations and hazard analyses and are oriented on international certification standards as specified by UL, CSA, ANSI Z-535, SEMI S1, ISO 3864 and DIN 4844. In this document, the following hazard levels and information are considered:

DANGER

Immediate danger

Death or very severe injuries can occur.

WARNING

Possible danger

Injuries or severe property damages can occur.

CAUTION

Possible danger

Injuries or property damages can occur.

NOTE

Command or note

Command to perform an action or information about properties, the disregarding of which may result in damage to the product.

Pictograph definitions

Prohibition of an action or activity in connection with a source of danger, the disregarding of which may result in serious accidents.

Warning of a displayed source of danger in connection with operation of the unit or equipment.

Command to perform an action or task associated with a source of danger, the disregarding of which may result in serious accidents.

Instructions in the text

➔ Work instruction: here you have to do something.

Symbols used

The following symbols are used consistently throughout in all illustrations:

- Vacuum connection
- Exhaust
- Gas ballast valve
- Power connection

2 Safety

2.1 Safety precautions

NOTE

Duty to inform

Each person involved in the installation, operation or maintenance of the vacuum pump must read and observe the safety-related parts of these operating instructions.

➔ The operator is obligated to make operating personnel aware of dangers originating from the vacuum pump, the pumped medium and the entire system.

NOTE

Installation and operation of accessories

Pfeiffer Vacuum pumps can be equipped with a series of adapted accessories. The installation, operation and maintenance of connected devices are described in detail in the operating instructions of the individual components.

➔ For information on order numbers of components, see "Accessories".

➔ Use original accessory parts only.

- Before pumping dangerous, corrosive or environmentally hazardous media, take suitable precautions:
  - Test the compatibility with substances in contact with the media.
  - Prevent the release of process gases and their reaction products and by-products or dispose of them according to the relevant regulations.
  - Safety measures (e.g. wearing protective clothing and safety goggles) to prevent inhalation and skin contact.

- Before pumping gases which could form ignitable mixtures, take suitable precautions:
  - By implementing the required safety measures, prevent potentially explosive mixtures from occurring in the housing and from being ignited in the event of a diaphragm crack by mechanically produced sparks, hot surfaces or static electricity.
  - If necessary, use inert gas for gas ballast supply or ventilation.
- Connect the vacuum pump to a shockproof socket only.
  - Use only undamaged network cables which comply with the regulations.
  - Make sure that the grounding is sufficient.
- Do not expose any body parts to the vacuum.
- Observe the safety and accident prevention regulations.
- Check regularly that all safety precautions are being complied with.
- Do not carry out any unauthorised modifications or conversions to the pumps.
- Depending on the operating and ambient conditions, the surface temperature of the pumps may rise above 70 °C. Use suitable finger guards if necessary.
- When returning the pumps to us please note the instructions in the Service section.

2.2 Proper use

NOTE

CE conformity

The manufacturer's declaration of conformity becomes invalid if the operator modifies the original product or installs additional components.

➔ Following installation into a plant and before commissioning, the operator must check the entire system for compliance with the valid EU directives and reassess it accordingly.

- The vacuum pump may only be used to generate a vacuum.
- Installation, operating and maintenance regulations must be complied with.
- Other accessories than those described in this manual must not be used without the agreement of Pfeiffer Vacuum.
- When pumping gases which could form explosive or ignitable mixtures, take suitable precautions:
  - If necessary, connect inert gas for ventilation or gas ballast supply.

2.3 Improper use

Improper use will cause all claims for liability and guarantees to be forfeited. Improper use is deemed to be all use for purposes deviating from those mentioned above, especially:

- Pumping of corrosive gases (exception: pumps in C version).
- Pumping of explosive media.
- Operation of the pump in potentially explosive areas.
- Pumping of gases containing impurities such as particles, dusts and condensate; note the vapour compatibility levels of the pump.
- Pumping of substances that tend to sublime.
- Use of the vacuum pump to generate pressure.
- Pumping of liquids.
- Connection to pumps or units which are not suitable for this purpose according to their operating instructions.
- Connection to units which have exposed voltage-carrying parts.

Improper use of the equipment automatically invalidates all warranty and liability claims.

3 Transport and storage

3.1 Transport

➔ Lift pump by hand at both face sides.

– Do not use the hose connection on the top side of the pump to carry the pump.

3.2 Storage

➔ Check that all the openings on the pump are securely closed.

➔ Store the pump in a cool, dry place; preferably at room temperatures (approx. 20°C).

– For a longer period of storage, seal the pump in a PE bag with drying agents enclosed.

4 Product description

4.1 Product identification

To correctly identify the product when communicating with Pfeiffer Vacuum, always have the information from the rating plate available.

- Pump model and model number
- Serial number
- Date of manufacture

Scope of delivery

- Pump with drive unit
- Mains connection (switchable)
- Silencer
- G 1/8" elbow union + enclosed hose DN 6 x 1000 mm with a straight union in G 1/4" at the end
- Operating instructions

4.2 Function

The diaphragm vacuum pump of the series MVP 015-2 is a two stage, dry compressor vacuum pump. The pumps are positive displacement pumps with a periodic change of size of the suction chamber produced by the movement of the diaphragm. The gas flow causes the valves to open and close automatically. The pump units are directly connected to the drive motor.

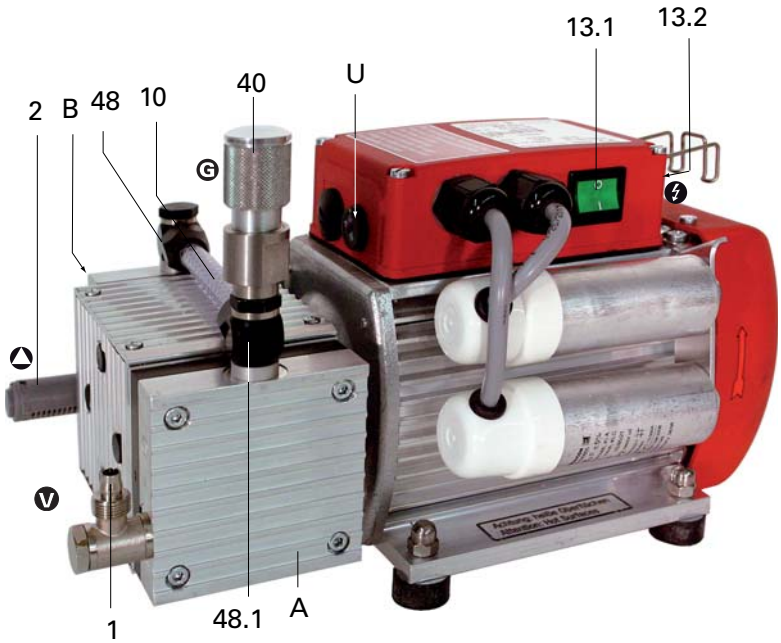

Abb. 1: MVP 015-2

A	Diaphragm head 1	13.1	Mains switch	48	Hollow screw
B	Diaphragm head 2	13.2	Mains connection with retaining clip	48.1	Hollow screw for gas ballast valve
1	Vacuum connection	40	Gas ballast valve	U	Voltage selector switch
2	Exhaust with silencer				
10	Hose connection				

5 Installation

5.1 Setting up the pump

Observe the following requirements when setting up the pump:

➔ Always place the pump on a firm, even surface.
  – Where stationary installation is involved, anchor the pump on site.

➔ Consider the load-bearing capacity of the installation site.

➔ When installing the pump in a closed housing, ensure there is sufficient air circulation.
  – Voltage and frequency information given on the motor rating plate must be visible.
  – Keep the ventilation openings at the motor free, in order to provide sufficient cooling air.

Installation conditions

The pump MVP 015-2 must be installed and operated under the following ambient conditions:

Installation location	weather protected (indoors)
Protection category	IP 20
Installation altitude	Max. 2000 m above m.s.l., if vacuum pump is installed above 1000 m above mean sea level check compatibillity with applicable safety requirements, e.g. DIN EN 61010 (motor may overheat due to insufficient cooling).
Ambient temperature	12-40 °C
Relative humidity	80 % at T ≤ 31 °C, up to max. 50% at T ≤ 40 °C
Degree of pollution	2
Overvoltage category	II

5.2 Connecting the vacuum side

➔ Remove locking cap on intake connection and connect vacuum pump to the apparatus.

➔ The connection between the pump and the recipient should be kept as short as possible.
  – Depending on the pump type, use metallic hoses or PVC hoses with flange connections.
  – Separators, filters etc. may be installed upstream to protect the pump (see accessories). However, please observe the loss of pumping capacity due to the conductivity of the accessories.

5.3 Connecting the exhaust side

CAUTION

High pressure in the exhaust line!

Danger of damage to the seals and danger of the pump bursting.

➔ Install the line without shut-off valves on the exhaust side.

➔ Pumpe nicht mit Überdruck am Einlass betreiben; max. zulässige Drücke und Druckdifferenzen beachten.

➔ Assemble silencer at the diaphragm head 2;
  – alternatively connect exhaust line.

➔ Choose the cross-section of the exhaust line to be at least the size of the nominal connection diameter of the vacuum pump's exhaust connection.

➔ Lay piping from the pump sloping downward so that no condensate can flow back into the pump; otherwise fit a condensate separator.

– If an air trap is created in the system, then a device for draining condensation water must be provided at the lowest point.

WARNING

Emission of toxic substances from the exhaust!

Danger of poisoning from emitted gases or vapours, which can be detrimental to health and/or can pollute the environment, depending on the particular application.

➔ Comply with the applicable regulations when working with toxic substances.

➔ Only officially approved filter systems may be used to separate and remove these substances.

5.4 Connecting to the mains power supply

The pump is driven by single-phase extended voltage range motors with reversible voltage ranges.

CAUTION

Excess voltage!

Danger of destroying the motor.

➔ Power connections must comply with local regulations. Voltage and frequency information given on the motor rating plate must correspond to the mains voltage and frequency values.

➔ To protect the motor and supply cable in case of malfunction, mains fuse protection must be implemented.

Single phase motors

➔ The mains voltage must be determined on-site each time before the pump is installed or moved to a different location.

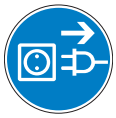

NOTE

Overvoltage!

An incorrect voltage range setting can damage the motor.

➔ Disconnect the pump from the power supply.

➔ Only change the voltage range when the pump is disconnected from the power mains.

Changing the voltage range

➔ Disconnect the pump from the power supply.

➔ Set the desired voltage range on the voltage selector switch using a suitable screwdriver.

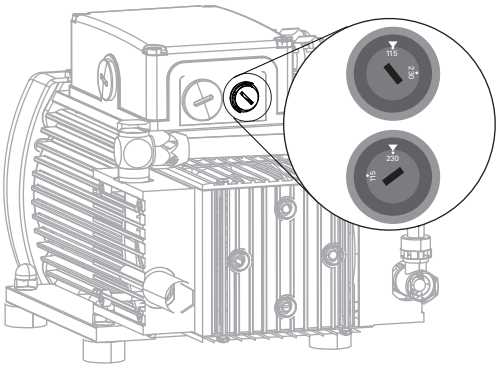

Switch position:	"115"	"230"
Voltage ranges:	90-127 V, 50/60 Hz,	187-259 V, 50/60 Hz

Motor protection

A self-locking thermal winding protector switches off the pump motor in the event of overheating (> 95°C).

➔ Allow the pump to cool off several minutes.

– Pump runs-up automatically after cooling off.

6 Operation

6.1 Before switching on the pump

➔ Compare the voltage information on the rating plate with the mains voltage.

➔ Check that the exhaust connection allows free flow (max. permissible pressure 1.1 bar absolute).

– Activate the shut-off valves in such a way that they open before or at the same time as the pump is started.

➔ Protect the pump sufficiently from taking in contaminants by means of suitable precautions (e.g. dust filters).

CAUTION

Dangerous overpressure overload!

Mixing up the connections leads to a dangerous overpressure overload in the pump, and the motor could be damaged.

➔ Before commissioning, it is imperative that you ensure that the pressure does rise above the maximum permissible pressure on the pressure side.

➔ Start pumps at a maximum pressure differential of 1 bar between inlet and outlet.

6.2 Switching on the pump

The pump can be switched on in any pressure range between atmospheric and ultimate pressure.

No special precautions are necessary when pumping dry gases. In order to attain the lowest possible final pressures, the gas ballast valve should be closed.

The pump attains the stated values for throughput rates and final pressure levels only once the operating temperature is reached (after approximately 15 minutes).

➔ Switch on the pump with the vacuum flange closed and allow to warm up for 15 minutes.

CAUTION

Hot surface!

Danger of burns if hot parts are touched. Depending on the operating and ambient conditions, the surface temperature of the pump may rise above 70 °C.

➔ In this case, use suitable finger guards.

Intermittend operation with TC via relay box (accessory)

To prolong the life of diaphragm pumps, intermittent operations can be selected with lesser gas throughputs of < 0.18 mbar l/s. This means that, dependent on the TMP power take-up, the backing pump will be switched on and off. TMP power take-up is dependent on the fore-vacuum pressure and gas throughput.

– By comparing the power take-up with an upper and a lower limit value, the relative switch-on duration with lesser gas throughputs can be reduced to approx. 1 to 60%.

– To avoid too frequent switching on, the buffer volume in the fore-vacuum line should amount to ≥0.5 liter from approx. 0.018 mbar l/s.

6.3 Pumping condensable vapours

Should the process gases contain condensable gases present at high percentages, the vacuum pump must be operated with a gas ballast (i.e. with an open gas ballast valve).

WARNING

Reactive, explosive or otherwise dangerous mixtures!

Uncontrolled gas inlet at the gas ballast valve can result in dangerous mixtures.

➔ By implementing the required safety measures, the user must prevent potentially explosive mixtures from occurring in the inside of the pump and from being ignited in the event of a diaphragm crack by mechanically produced sparks, hot surfaces or static electricity.

➔ If necessary, use inert gas for ventilation and gas ballast supply.

NOTE

Bad final vacuum and damage to the pump!

Danger of condensation and a reduced final vacuum during operation without a gas ballast or in case of insufficient supply of flushing gas.

➔ Only pump vapors when the pump is warm and the gas ballast valve is open.

➔ When the process has been completed, allow the pump to continue running for about 30 minutes at atmospheric pressure with the gas ballast open.

Gas ballast valve

Letting in gas ballast improves the discharge of condensate, and the pump achieves the specified final vacuum more quickly.

The lower part of the valve casing has been constructed in such a way to permit the mounting of a magnetic valve with a connection thread of G 1/8".

40 Gas ballast valve
43 Sleeve
"I" open
"0" closed

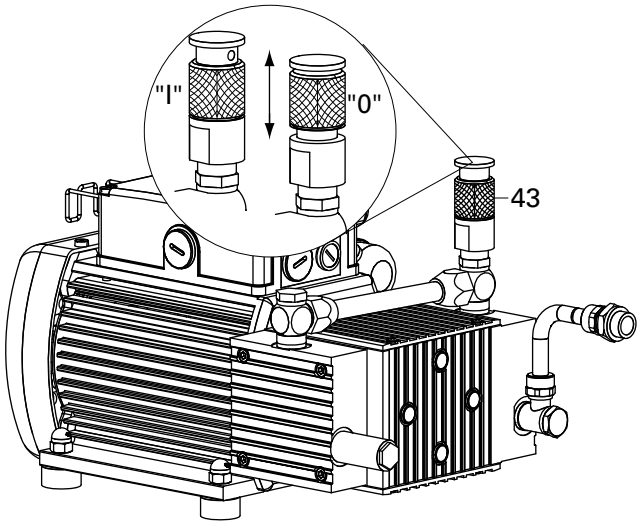

Abb. 2: Operation with gas ballast valve

➔ Open gas ballast valve; to do so, slide sleeve 43 in Position "I".

6.4 Switching off

The pump can be switched off in any pressure range.

7 Maintenance

7.1 Precautions

WARNING

Pump parts may be contaminated from pumped media!

Danger of poisoning due to contact with harmful substances.

➔ Decontaminate the pump before carrying out any maintenance work.

➔ In the event of contamination, take suitable safety precautions to prevent your health from being harmed by any dangerous substances.

The valves and the diaphragms are wear parts. If the rated ultimate vacuum is no longer achieved, the pump interior, the diaphragms and the valves must be cleaned and the diaphragms and valves must be checked for cracks or other damage.

Depending on individual cases it may be efficient to check and clean the pump heads on a regular basis. In case of normal wear the lifetime of the diaphragms and valves is > **10000** operating hours.

➔ Turn off the vacuum pump, vent to atmospheric pressure and allow to cool, if necessary.

➔ Disconnect the drive motor from the mains and secure it so that it cannot be switched on.

➔ Only dismantle the pump as far as necessary in order to repair defects.

➔ Use only alcohol or similar agents for cleaning pump parts.

➔ Re-assemble pump in reverse order.

NOTE

Service work should be carried out by qualified personal only!

Pfeiffer Vacuum is not liable for any damage to the pump resulting from work carried out improperly.

➔ Take advantage of our service training programs; additional information at www.pfeiffer-vacuum.net.

➔ Please state all the information on the pump rating plate when ordering spare parts.

Checklist for inspection, maintenance and overhaul

Certain repair and overhaul work should only be performed by Pfeiffer Vacuum Service (PV). Pfeiffer Vacuum will be released from all warranty and liability claims if the required intervals for inspection, maintenance, or overhaul are exceeded or inspection, maintenance, repair or overhaul procedures are not performed properly. This also applies if replacement parts other than Pfeiffer Vacuum OEM replacement parts are used.

Activity	daily	as required; at least once every six months	as required; at least annually	as required; at least every 2 years
Check silencer for contamination		X		
Clean, change valves and diaphragms			X	
Change silencer				X

Depending on the process, the required intervals for inspection and maintenance can exceed the typical values specified in the table. Please consult Pfeiffer Vacuum if necessary.

7.2 Cleaning and replacing diaphragm and valves

NOTE

Damage to the pump and reduced final vacuum!

A changed dead centre (TDC) leads in the most unfavorable case to a bearing damage.

➔ Check for washers D under diaphragm support washer.

➔ Make sure that the original number is reassembled at the individual membrane head.

Dismantling

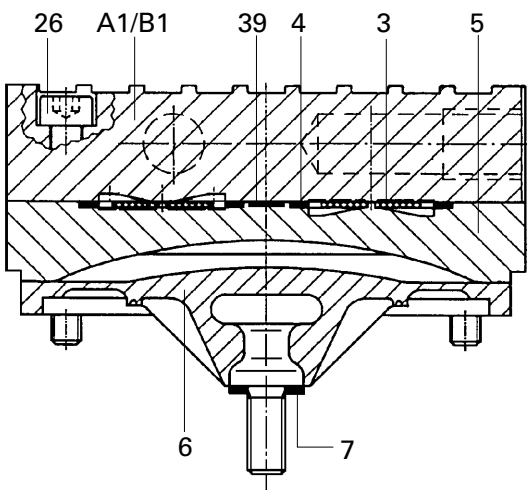

A1/B1 Head cover
3 Valve plate
4 Sealing ring (at the intake side only)
5 Intermediate plate
6 Diaphragm
7 Spacer disk
26 Allen head screw

Abb. 3: Replacing diaphragm and valves

➔ Unscrew gas ballast valve 40 complete from the hollow screw 48.1; be careful with O-ring.

➔ Unscrew the hose connection between the pump stages by loosening the hollow screw with a wrench (size 14).

➔ Place pump on the side with the diaphragm head face upwards.

➔ Unscrew allen head screws 26 (4 pieces) from the head cover A1/B1, and remove head cover; be careful with the sealing rings 4 and 39.

➔ Remove intermediate plate 5; be careful with valve plate 3.

➔ Lift the diaphragm 6 slightly on the edge and manually unscrew from the connecting rod (right-hand thread); be careful with spacer disk D.

Assembling

➔ **Assembling** is carried out in reverse order.

➔ Clean all parts and inspect for wear.

➔ Check bypass bore in the intermediate plate 5 of the intake side.

➔ Exchange wear parts.

7.3 Cleaning the gas ballast valve

Gas ballast valve 40 is contaminated only, if dusty ambient air is sucked in. With increasing contamination the air flow rate is reduced and therefore the discharge of condensate of the pump also.

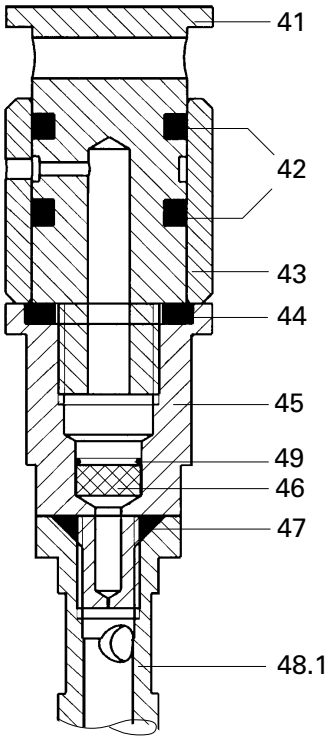

41 Valve housing
42 O-ring
43 Sleeve
44 USIT ring
45 Reducing piece
46 Filter
47 O-ring
48.1 Hollow screw
49 Circular spring

Abb. 4: Gas ballast valve 40

➔ Unscrew gas ballast valve 40 complete from the hollow screw 48.1; be careful with O-ring.

➔ Insert round bar into cross-hole in valve housing 41 and screw off valve housing from reducing piece 45.

➔ Remove sleeve 43 from the valve housing 41.

➔ Check the O-rings 42 and the USIT-ring 44 for damage; replace if necessary.

➔ Unlever circular spring 49 with a small screw driver carefully out of the reducing piece 45 and dump out circular spring 49 and filter 46.

➔ Clean all parts and inspect for wear.

➔ **Assembling** is carried out in reverse order.

➔ Observe the bore in sleeve 43 (bore pointing upwards).

7.4 Replacing the device fuses

The microfuses (5 x 20 / 3,15A T) are located in a fuse carrier in the terminal box.

WARNING

Voltage-bearing elements

Danger to life from electric shock.

➔ The fuses can be changed only by trained and authorised electricians.

➔ Before opening the terminal box, switch off the pump and pull the power plug.

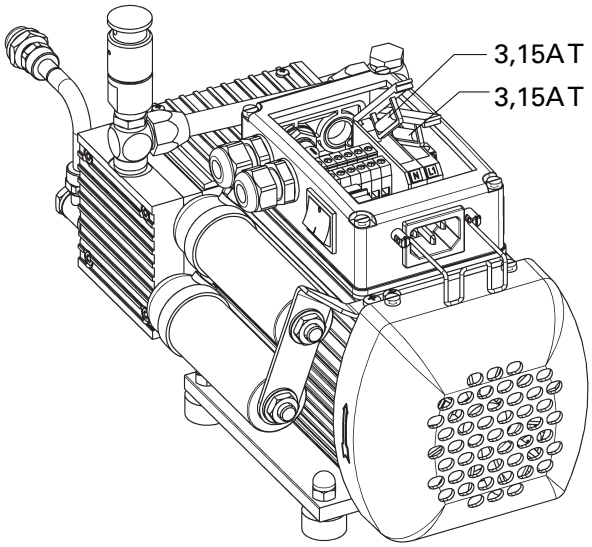

Abb. 5: Replacing the microfuses

➔ Disconnect the drive motor from the mains and secure it so that it cannot be switched on.

➔ Wait for two minutes until the capacitors have discharged.

➔ Establish the cause of the fault and rectify before restarting.

➔ Open the terminal box lid.

➔ Open fuse holder and replace fuses.

➔ Remount the terminal box lid.

8 Decommissioning

8.1 Shutting down for longer periods

Before shutting down the pump, observe the following procedure and adequately protect the pump system against corrosion:

Shortly after condensate has formed:

➔ Let the vacuum pump continue to run for several minutes with the intake port open.

➔ Should media get into the pump which could corrode the pump materials or form deposits, clean and check the diaphragm heads.

In the long term:

➔ Carry out the measures described for brief shutdowns.

➔ Disconnect the pump from the equipment.

➔ Close the manual gas ballast valve.

➔ Close the inlet and outlet opening (e.g. with transport caps).

➔ Store the pump in a dry place.

9 Malfunctions

Please note the following instructions should the pump malfunction:

CAUTION
Hot surface! Danger of burns if hot parts are touched. The surface temperature of the pump may rise above 105 °C in case of malfunction. ➔ Carry out work on the pump only after it has cooled to a safe temperature.

9.1 Rectifying malfunctions

Problem	Possible causes	Remedy
Pump will not start up	No mains voltage or voltage does not correspond to the motor data	Check mains voltage and mains fuse protection; check motor switch
	Pump temperature too low	Warm up pump to > 12°C
	Thermal protection switch of the motor has responded	Detect and fix cause of overheating; allow pump to cool off if necessary.
	Phase failure	Check fuse
	Diaphragms or valves dirty	Clean pump*(see p. 13, chap. 7)*
	Overpressure in the exhaust lead	Check exhaust lead
	One of the integrated fuses is defective	Check fuses and replace if necessary
Pump switches off after a while after being started	Thermal protection switch of the motor has responded	Detect and fix cause of overheating; allow pump to cool off if necessary.
	Mains fuse protection triggered due to overload (e.g. cold start)	Warm up pump
	Exhaust pressure too high	Check opening of exhaust line and exhaust accessories
Pump not achieving the end pressure	Condensate in the pump	Operate pump for a longer period of time at atmospheric pressure; if necessary, open the gas ballast valve
	Gas ballast valve open	Close gas ballast valve
	Valves or diaphragms dirty or defective	Clean or change valves and diaphragms *(see p. 13, chap. 7)*
	Leak in the system	Fix leak
Pumping speed of pump too low	Intake line not well-dimensioned	Keep connections as short as possible and see that cross-sections are sufficiently dimensioned
	Exhaust pressure too high	Check opening of exhaust line and exhaust accessories
Unusual noises during operation	Diaphragms or valves defective	Clean or change valves and diaphragms *(see p. 13, chap. 7)*
	Suction chamber dirty	Clean suction chamber
	Silencer loose or missing	Check silencer; replace if necessary
	Valves dirty or defective	Clean or change valves and diaphragms *(see p. 13, chap. 7)*
	Motor fan defective	Replace motor fan
	Connection rod or motor bearing defective	Contact Pfeiffer Vacuum Service

NOTE

Service work should be carried out by qualified personal only!

Pfeiffer Vacuum is not liable for any damage to the pump resulting from work carried out improperly.

➔ Take advantage of our service training programs; additional information at www.pfeiffer-vacuum.net.

➔ Please state all the information on the pump rating plate when ordering spare parts.

10 Service

Pfeiffer Vacuum offers first-class service!

- Maintenance/repairs on the spot by Pfeiffer Vacuum field service
- Maintenance/repairs in the nearby service center or service point
- Fast replacement with exchange products in mint condition
- Advice on the most cost-efficient and quickest solution

Detailed information and addresses at: **www.pfeiffer-vacuum.net (Service)**.

Maintenance and repairs in the Pfeiffer Vacuum ServiceCenter

The following steps are necessary to ensure a fast, smooth servicing process:

➔ Download the forms "Service Request" and "Declaration on Contamination".[1)]

➔ Fill in the "Service Request" form and send it by fax or e-mail to your service address.

➔ Include the confirmation on the service request from Pfeiffer Vacuum with your shipment.

➔ Fill in the contamination declaration and enclose it in the shipment (required!).

➔ Dismantle all accessories.

➔ Send the pump in its original packaging if at all possible.

Sending of contaminated pumps or devices

No units will be accepted if they are contaminated with micro-biological, explosive or radioactive substances. “Hazardous substances” are substances and compounds in accordance with the hazardous goods directive (current version). If pumps are contaminated or the declaration on contamination is missing, Pfeiffer Vacuum performs decontamination at the shipper's expense.

➔ Neutralise the pump by flushing it with nitrogen or dry air.

➔ Close all openings airtight.

➔ Seal the pump or unit in suitable protective film.

➔ Return the pump/unit only in a suitable and sturdy transport container and send it in while following applicable transport conditions.

Service orders

All service orders are carried out exclusively according to our repair conditions for vacuum units and components.

1) Forms under www.pfeiffer-vacuum.net

11 Spare parts

Spare part package/ Spare parts	No.	Pieces	consisting of the parts
Set of wearing parts	PU E22 001 -T	1	3, 4, 6, 14, 15, 39
Silencer	P 0920 567 E	1	8
Hose connection	PK 050 002 -T	1	10
Intake hose	P 0991 939	1m/6x1	12
Gas ballast valve, complete	PK 050 148 -U		40
Hollow screw for gas ballast valve	PK 050 136	G 1/8", M6	48.1

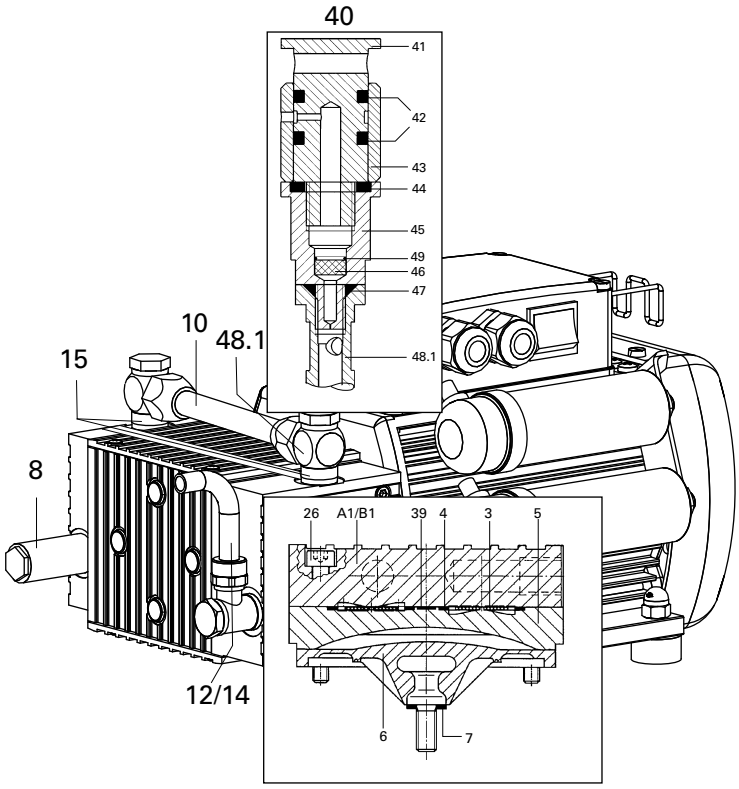

12 Accessories

Description	MVP 015-2
230 V AC mains cable with Euro-style safety plug, IEC power socket (straight), 3 m	P 4564 309 ZA
Mains cable 115 / 230 V without plug, IEC 320/C13 socket, 3 m	P4 564 309 ZH
115 V AC mains cable with UL plug, IEC power socket (straight), 3 m	P 4564 309 ZE
Backing pump relay box, single phase 5 A, for TC 110/TCP 350	PM 061 372-T
Screw-in flange DN 16 ISO-KF / G 1/8" incl. seal	PK 050 108-T
Hose connection DN 6x400 mm with straight fitting G 1/8" and G 1/4" including sealing rings	P 0920 739 E

Further detailed accessories are contained in the Pfeiffer Vacuum printed or Online Catalogue.

13 Technical data and dimensions

13.1 General

The following harmonised standards are fulfilled:

- IEC 61010-1
- UL 61010-1
- CSA 61010-1

13.2 Technical data

MVP 015-2

Parameter	MVP 015-2
Flange (in)	G 1/8" elbow union + enclosed hose DN 6 x 1000 mm with a straight union in G 1/4" at the end
Flange (out)	G 1/8" + silencer
Nominal pumping speed at 50 Hz	0.9 m^3/h
Nominal pumping speed at 60 Hz	1.1 m^3/h
Ultimate pressure with gas ballast	≤ 4.5 mbar
Ultimate pressure without gas ballast	≤ 3.5 mbar
Exhaust pressure max.	1050 mbar
Leak rate	$5 \cdot 10^{-3}$ mbar l/s
Sound pressure level	52 dB (A)
Ambient temperature	12-40 °C
Relative humidity of air	At: (40-31 °C): 50-80 %
Protection category	IP 20
Rotation speed at 50 Hz	1500 rpm
Rotation speed at 60 Hz	1800 rpm
Motor rating	120 W
Mains requirement: voltage (selectable)	100-115 V (± 10 %) , 50/60 Hz ; 208-236 V (± 10 %), 50/60 Hz
Switch	Yes
Rated current absorption	115 V 50/60 Hz, 0.65/1.1 A ; 230 V 50/60 Hz, 0.35/0.55 A
Weight	6.5 kg

13.3 Substances in contact with the media

MVP 015-2	Substances in contact with the media
Diaphragm	EPDM
Valve seals	EPDM
Head cover	Aluminium
Hose connection	PVC
Elbow union	Aluminium
Straight union at intake hose	CuZn nickel-plated
Intake hose	Polyethylene
Exhaust, silencer	Polyamide

13.4 Dimensions

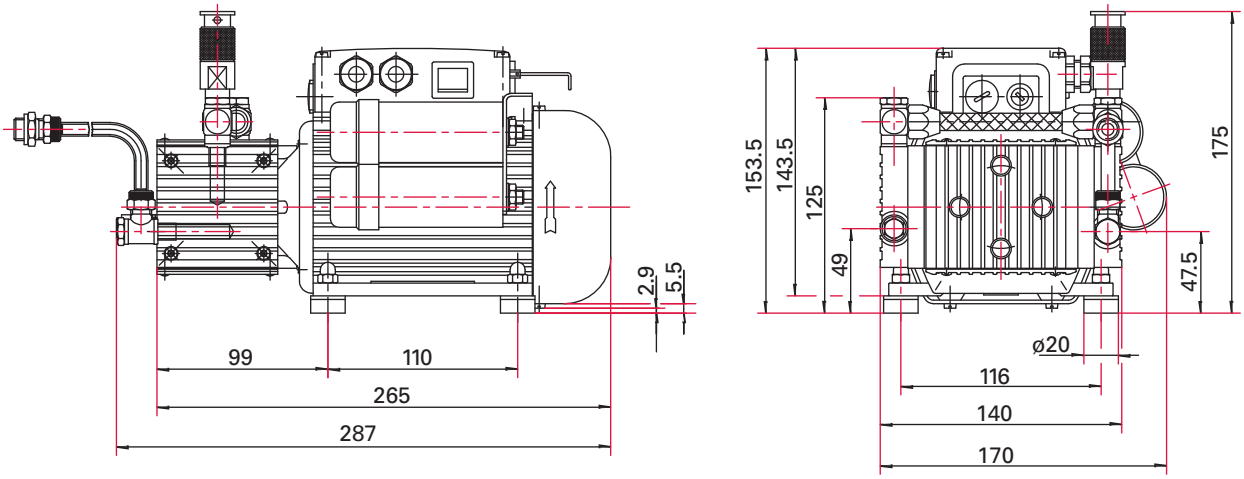

Abb. 6: MVP 015-2

Declaration of conformity

according to the EC directive:

- **Machinery 2006/42/EC (Annex II, no. 1 A)**

We hereby declare that the product cited below satisfies all relevant provisions of EC directive "Machinery" **2006/42/EC**.

In addition, the product cited below satisfies all relevant provisions of EC directive "Electromagnetic Compatibility" **2004/108/EC** .

The agent responsible for compiling the technical documentation is Mr. Sebastian Oberbeck, Pfeiffer Vacuum GmbH, Berliner Straße 43, 35614 Aßlar.

MVP 015-2

Guidelines, harmonised standards and national standards and specifications which have been applied:

DIN EN ISO 12100-1 : 2004	DIN EN 61010-1 : 2002	DIN EN 55014-1 : 2007
DIN EN ISO 12100-2 : 2004	DIN EN 61000-3-2 : 2006	DIN EN 55014-2 : 2009
DIN EN 1012-2 : 1996	DIN EN 61000-3-3 : 2009	

Signatures:

Pfeiffer Vacuum GmbH
Berliner Straße 43
35614 Asslar
Germany

(M.Bender)	(Dr. M. Wiemer)	CE/2010
Managing Director	Managing Director	

PFEIFFER VACUUM

Vacuum is nothing, but everything to us!

- Turbopumps
- Rotary vane pumps
- Roots pumps
- Dry compressing pumps
- Leak detectors
- Valves
- Components and feedthroughs
- Vacuum measurement
- Gas analysis
- System engineering
- Service

PFEIFFER VACUUM

Pfeiffer Vacuum Technology AG · Headquarters/Germany
Tel. +49-(0) 64 41-8 02-0 · Fax +49-(0) 64 41-8 02-2 02 · info@pfeiffer-vacuum.de · www.pfeiffer-vacuum.net