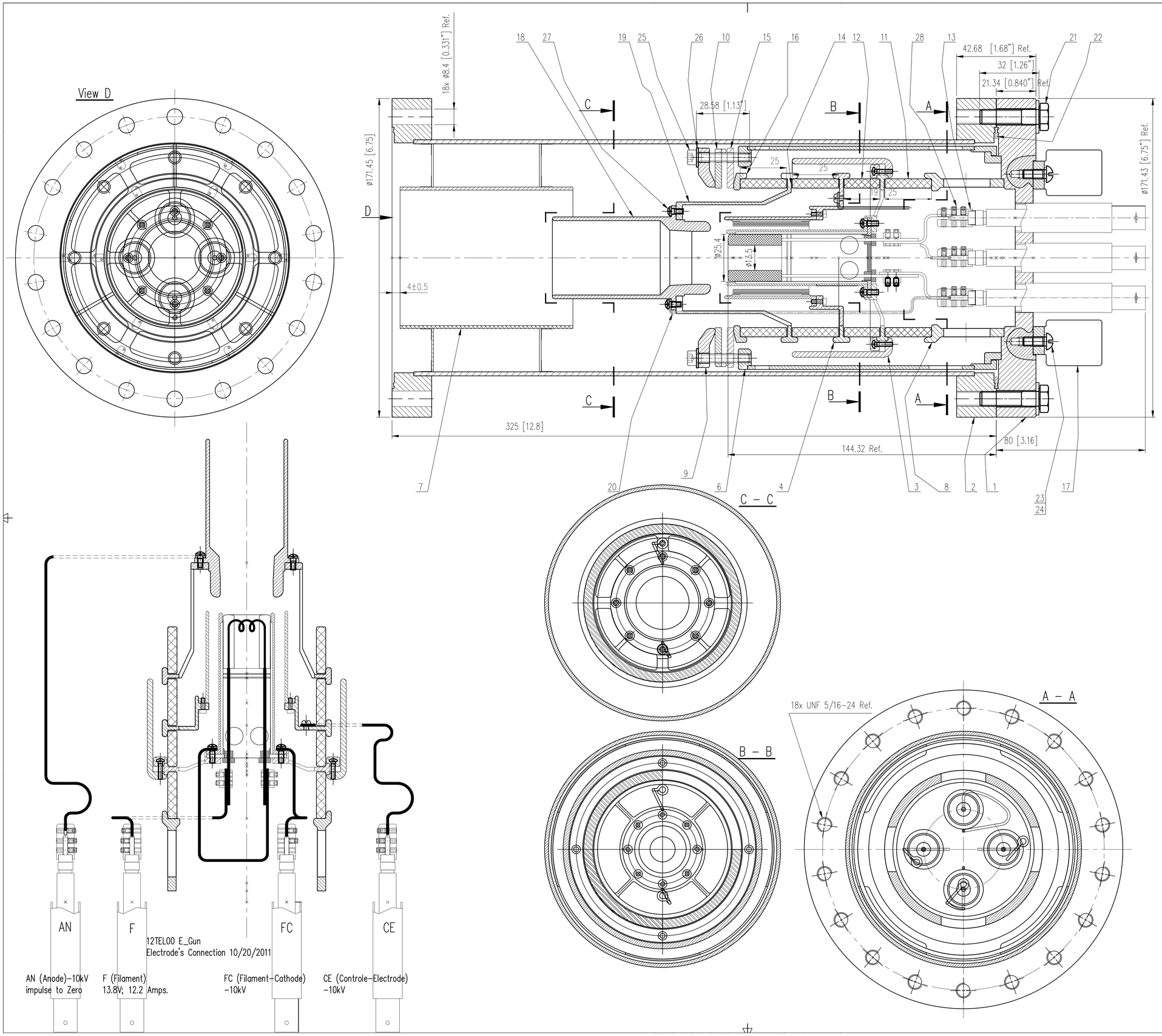

Notes:
1. Copper: C10100–H02, Class 1 or 2 OFE. mill source certificates, including heat number and chemical analysis must accompany parts.
2. Stainless steel mill source certificates required, including heat number and chemical analysis. Non magnetic.
3. Knife–edge flanges must be free of all nicks and defects; protect at all times.
4. Machining: The use of polishing sanding disks, abrasive paper, or grinding wheels is prohibited without prior approval.
5. Lubricants used for part machining must correspond to all UHV standards.
6. High–temp processing: parts requiring heat treating above 300° C must be processed in a dry hydrogen or inert atmosphere, or in a clean oil–free vacuum furnace.
7. UHV handling: Handle UHV–clean parts with clean polyethylene and nylon gloves, in/on a clean room and surface. For storage or shipping, wrap parts in lint–free tissue and food–grade aluminum foil; store in clean tote boxes.
8. Leak testing: use a helium mass–spectrometer leak detector calibrated to 2x10–10 std cc/sec above background.
9. Assemblies which are fabricated and assembled clean by an outside vendor or collaborator will be brought in and used as–is, should receive careful attention, and the vendor should be inspected and qualified for UHV–clean work.
10. Welding must correspond to all UHV standards.
11. All dimensions are in millimeters.

Item	Qty	Description	Standard	Material
28	16	Socket Head Set Screw N/Vent U–C Components # T–403–NA	#4–40–0.188 UNC	18–8SS Silver Plaited
27	8	Phillips Pan Head Screw U–C Components # P–404–NA	# 4–40–0.25" UNC	18–8SS Silver Plated
26	8	Flat Washer U–C Components # WF–10–A	#10	SS Silver Plated
25	8	Socked Head Cap Screw U–C Components # C–2418–NA	#10–24–1.125" UNC	SS Silver Plaited
24	8	Helical Spring Lock Washer McMaster–Carr # 92147A430	#10	316SS N/Mag ASME B18.21.1
23	8	Pan Head Phillips Machine Screw McMaster_Carr #91735A242	#10–24–1/2 UNC	316SS N/Mag
22	1	Gasket MDC Part# 191015 Reference GK–500	5.01" ID	Oxigen Free Copper
21	18	12pt Bolt Set; MDC Part#190058 Reference BA–125–12–SP	0.312–24–1.25 " UNF	300SS Silver Plated
20	1	Anode Conductor	12TEL000015	OF Copper
19	1	Support	12TEL000014	304SS_N/Mag
18	1	Anode	12TEL000013	C101_OFC
17	1	Radiator	12TEL000012	2011_Alum_Al
16	1	Ring	12TEL000011	304SS_N/Mag
15	1	Ring	12TEL000010	304SS_N/Mag
14	6	Ring	12TEL000008	C101_OFC
13	4	Connector	12TEL000007	304SS_N/Mag
12	1	Insulator_Morgan_Advanced_Ceramics	12TEL000005	Al–995
11	3	Insulator_Morgan_Advanced_Ceramics	12TEL000004	Al–995
10	1	Ring	12TEL000003	316SS_N/Mag
9	1	Flange	12TEL000002	316SS_N/Mag
8	1	Bushing	12TEL000001	OFCopper
7	1	Tube	12TEL070000	Non Magnetic
6	1	Tube Assembly	12TEL060000	Non Magnetic
4	1	Electrode Flange	12TEL040000	Non Magnetic
3	1	Cathode_Assy3	12TEL030000	Non Magnetic
2	1	Nipple_MDC Catalog Reference_500–2	12TEL020000	Non Magnetic
1	1	Base Flange_MDC_Ctlg_Ref_F675000	12TEL010000	Non Magnetic

FILE NAME 12TEL000000_Assy	FSCM NO i	SHEET q	SCALE 1:1
SIZE A1		FERMI NATIONAL ACCELERATOR LABORATORY UNITED STATES DEPARTMENT OF ENERGY	
DRAWN 04/06/2011 A. Didenko		Electron Inch Gun	
CHECK p n		Electron Inch Gun_12TEL000000	
APPR. 04/08/11 A. Valishev			
ISSUED 11/02/04 G. Kuznetsov		DWG NO 12TEL000000_Assy	
REV r			
CONTRACT NO O			